REV	DESCRIPTION	REV BY	REV DATE	APP'D BY	DATE APP.
-	PRODUCTION RELEASE	///	/////	RHP	03/16/15
A	EC-9949 REMOVED DRAWER CUT OUT; ADDED AS OPTIONAL	JMS	09/29/17	RHP	09/29/17

ITEM	DESCRIPTION		P/N	QTY.
1	DOOR,L5,23W,L	- -	L5_23W_DL_ASM	1
2	KEYBOARD,L5,23W	- -	L5_23W_KB_ASM	1
3	MID,FRNT,L5,23W	- -	L5_23W_MD_FR_ASM	1
4	REAR,L5,TUR,23W	- -	L5T_23W_REAR_ASM	1
5	SIDE,L5,TUR,L	- -	L5T_SL_ASM	1
6	SIDE,L5,TUR,R	- -	L5T_SR_ASM	1

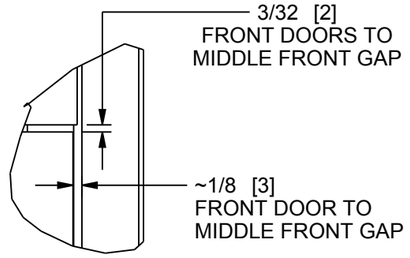

DETAIL D
SCALE 1/2

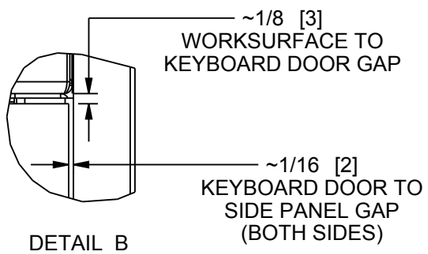

DETAIL B
SCALE 1/2

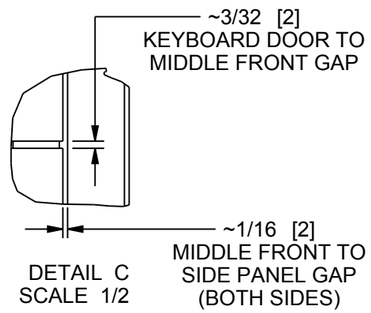

DETAIL C
SCALE 1/2

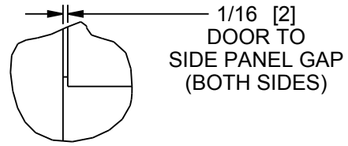

DETAIL E
SCALE 1/2

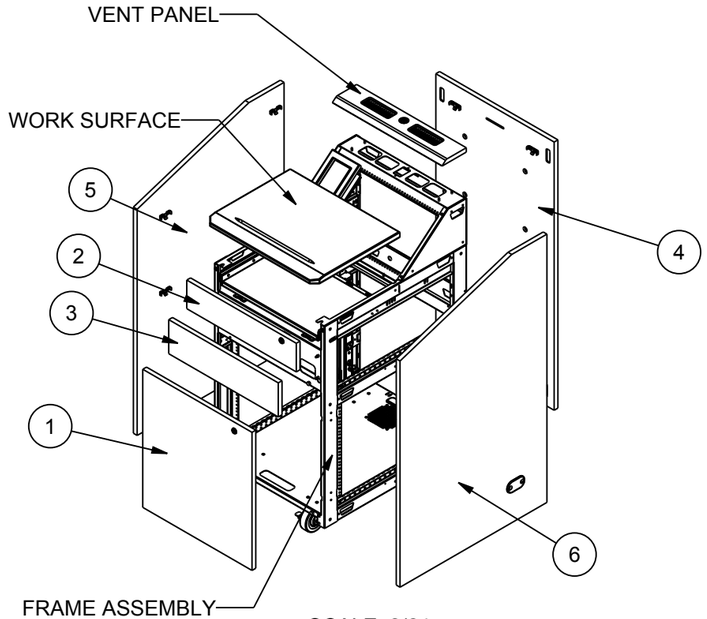

SCALE 3/64

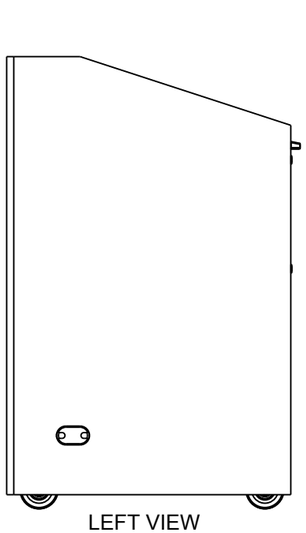

LEFT VIEW

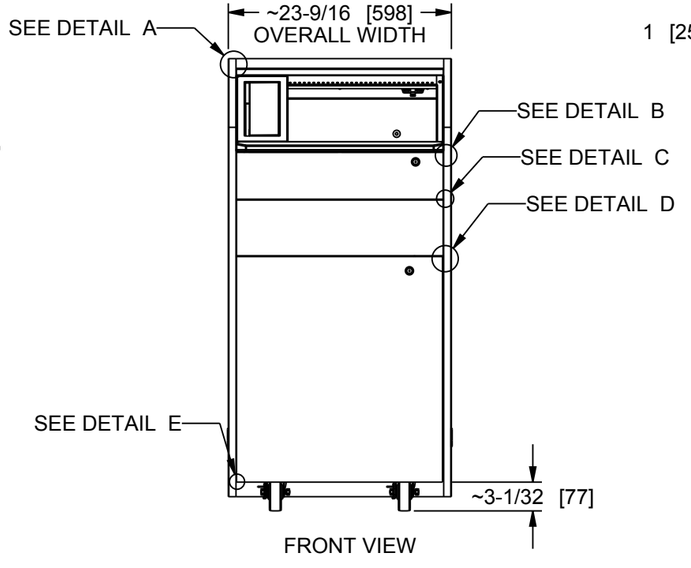

FRONT VIEW

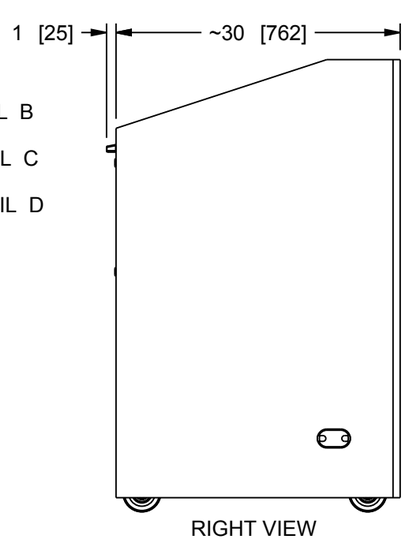

RIGHT VIEW

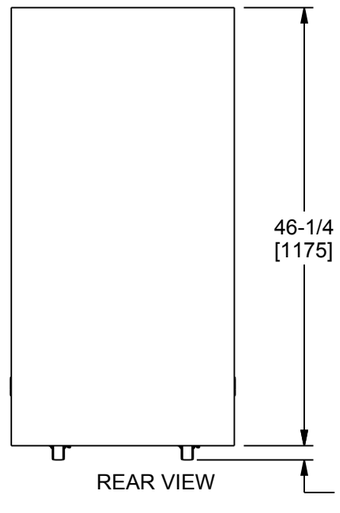

REAR VIEW

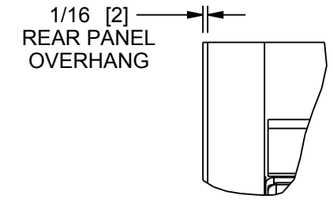

2X DETAIL A
SCALE 1/2

NOTE(S):
1. WORK SURFACE AND VENT PANEL INCLUDED IN MILLWORK KIT
2. DIMENSIONS SHOWN ARE IN INCHES [MM]

USED ON: L5-TMHWS-23SN	APPROVALS	DATE	Middle Atlantic Products, Inc
	MODELED RHP	12/13/16	
MATERIAL: SEE COMPONENTS	DRAWN JMS	09/28/17	TITLE L5,MILLWORK,TURRET,23" - -
	CIRCLED DIMENSIONS ARE CRITICAL INSPECTION DIMENSIONS		
FINISH: - - - -	UNLESS OTHERWISE SPECIFIED, ALL DIMENSIONS ARE IN INCHES GENERAL TOLERANCES: DEC: 1 PLACE +/-0.1 ANGLE: +/-1° 2 PLACE +/-.03 FRAC: +/-1/32 3 PLACE +/-.010 HOLE SIZE: +/-0.002		PART NO. L5-MK23_TUR_ASSY — PART REV A
SCALE = 1/16	PROJECTION: 3RD ANGLE		SIZE B — MFG NO. NONE
SHEET 1 OF 1			DWG NO. L5-MK23_TUR_ASSY — DWG REV A

THIS DRAWING CONTAINS TRADE INFORMATION DEEMED TO BE CONFIDENTIAL AND PROPRIETARY PROPERTY OF MIDDLE ATLANTIC PRODUCTS, INC. AND IS TO BE USED ONLY FOR THE PURPOSES FOR WHICH IT IS SUBMITTED AND FURTHER SHALL NOT BE COPIED IN WHOLE OR PART WITHOUT WRITTEN PERMISSION FIRST OBTAINED FROM MIDDLE ATLANTIC PRODUCTS, INC.

DEF-00111 REV J 11/21/16