ITEM	DESCRIPTION		P/N	QTY.
1	REAR,L5,TUR,43W	- -	L5T_43W_REAR	1
2	FAB,SHIM,500-01324	- -	TPWSCSHIM	8
3	SCW,#10X5/8 PAN PHIL FLAKE BLK	- -	80-001	16
4	WOOD PANEL CLIP	- -	500-01324	8

NOTE(S):
1. DIMENSIONS SHOWN ARE IN THE FORMAT IN [MM]
2. ITEMS 2, 3, AND 4 ARE LOCATED IN HARDWARE KIT 91-00561.

IMPORTANT NOTE:
1. CURRENT WOOD REVISION REMOVED MILLED POCKETS; USE NEW CLIPS: MAP PART NO. 500-01324 (LEFT)
2. PRIOR REVISION WOOD WITH MILLED POCKETS: USE PWSC OR 500-01324 WITH (3) TPWSCSHIM ((2) 25 PACK SUPPLIED) (RIGHT)

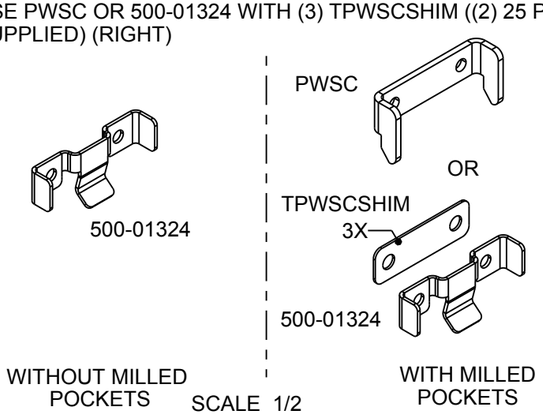

SCALE 1/2

REV	DESCRIPTION	REV BY	REV DATE	APP'D BY	DATE APP.
-	PRODUCTION RELEASE	///	/////	RHP	03/16/15
A	EC6961: REMOVED MILLED POCKETS, NEW WOOD CLIPS	MPK	08/20/15	JIP	08/25/15

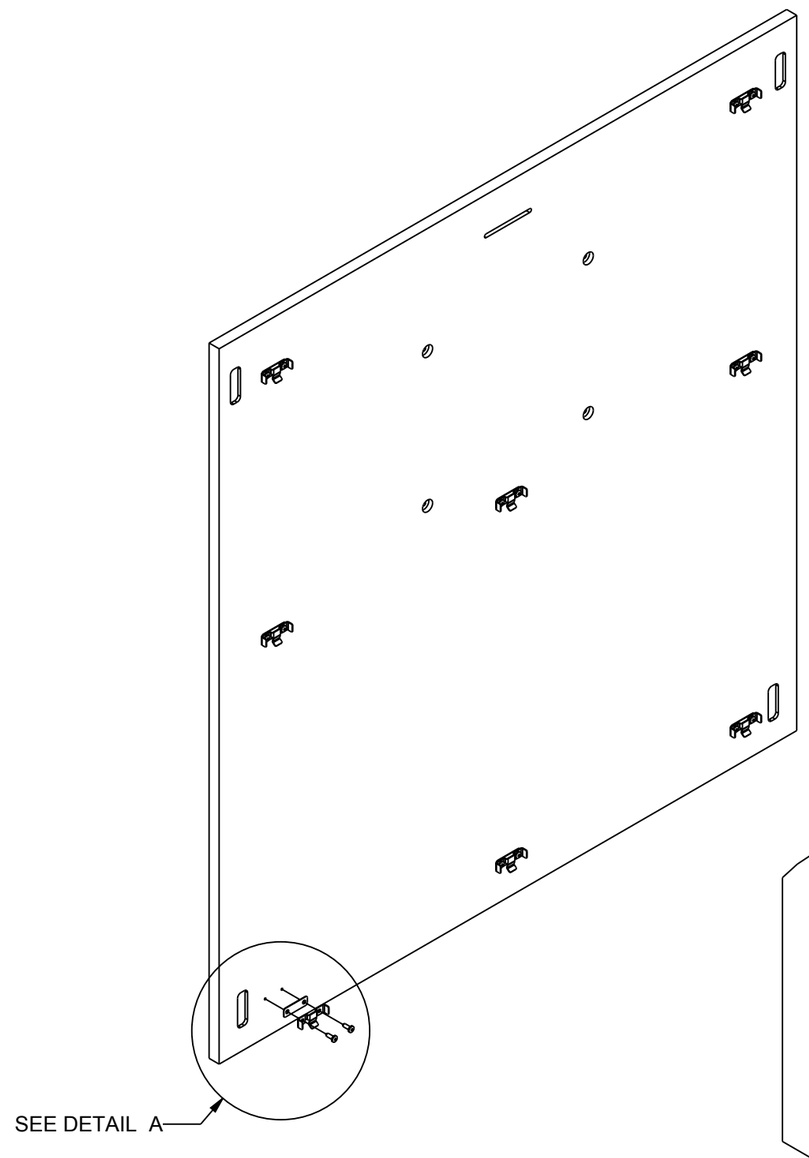

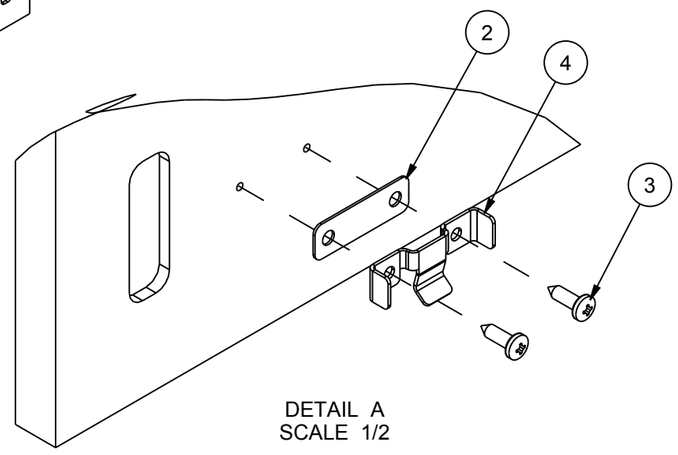

DETAIL A
SCALE 1/2

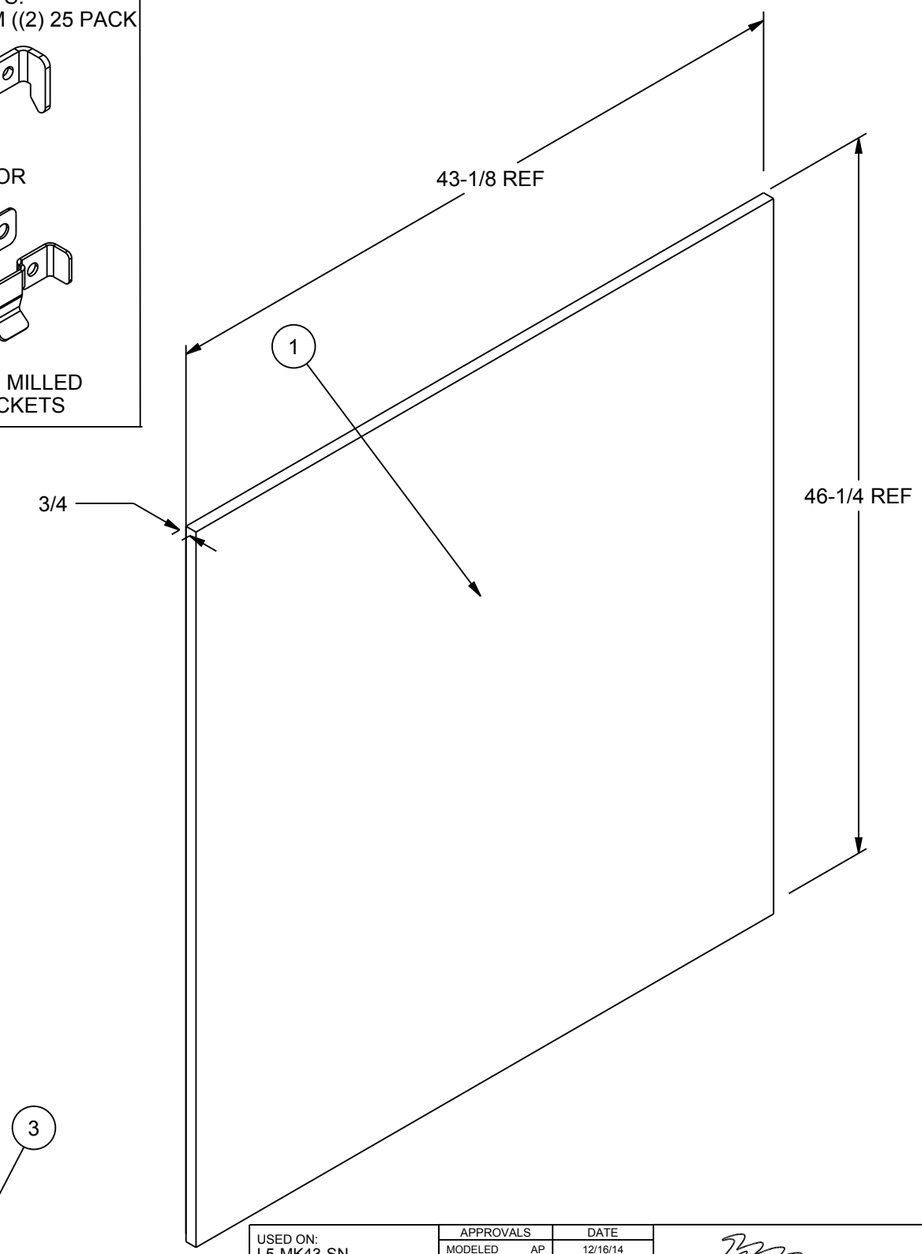

USED ON: L5-MK43-SN	APPROVALS		DATE
	MODELED	AP	12/16/14
	DRAWN	AP	12/17/14
NEXT ASSY: - -	CIRCLED DIMENSIONS ARE CRITICAL INSPECTION DIMENSIONS		
MATERIAL: SEE COMPONENTS	UNLESS OTHERWISE SPECIFIED, ALL DIMENSIONS ARE IN INCHES GENERAL TOLERANCES: DEC: 1 PLACE +/-0.1 ANGLE: +/-2° 2 PLACE +/-.03 FRAC: +/-1/32 3 PLACE +/-.010 HOLE SIZE: +/-0.002		
FINISH: - - - -	SCALE = 1/8	PROJECTION: 3RD ANGLE	
	SHEET 1 OF 1		

Middle Atlantic Products, Inc

TITLE	REAR,L5,TUR,43W - -	
PART NO.	L5T_43W_REAR_ASM	PART REV B
SIZE B	DXF NO. NONE	
DWG NO.	L5T_43W_REAR_ASM	DWG REV A

THIS DRAWING CONTAINS TRADE INFORMATION DEEMED TO BE CONFIDENTIAL AND PROPRIETARY PROPERTY OF MIDDLE ATLANTIC PRODUCTS, INC. AND IS TO BE USED ONLY FOR THE PURPOSES FOR WHICH IT IS SUBMITTED AND FURTHER SHALL NOT BE COPIED IN WHOLE OR PART WITHOUT WRITTEN PERMISSION FIRST OBTAINED FROM MIDDLE ATLANTIC PRODUCTS, INC.

DEF-00111 REV G 07/19/12