REV	DESCRIPTION	REV BY	REV DATE	APP'D BY	DATE APP.
-	PRODUCTION RELEASE	///	/////	RHP	03/16/15

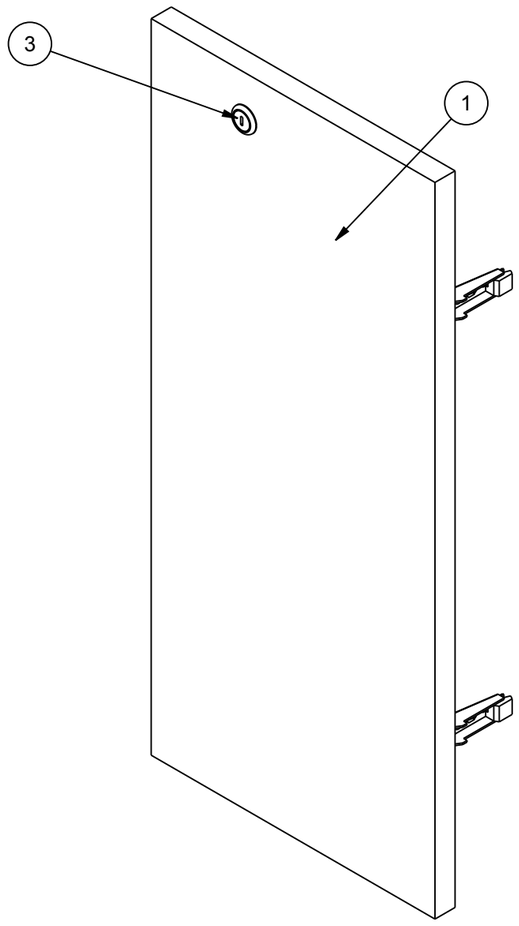

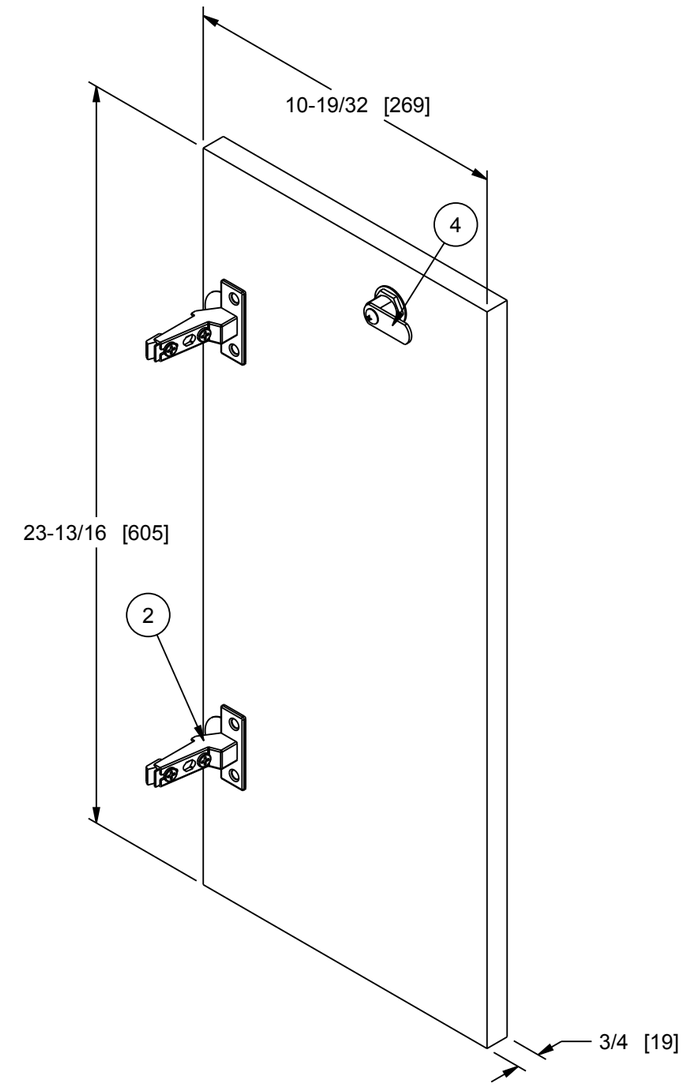

NOTE(S):
1. DIMENSIONS SHOWN ARE IN THE FORMAT IN [MM]
2. ITEMS 2, 3, AND 4 ARE LOCATED IN HARDWARE KIT.
3. ITEM 3 WILL VARY DEPENDING ON WHICH COLOR LOCKS HAVE BEEN SELECTED.
91-00556, AS SHOWN, CONTAINS ITEM 3 IN SATIN NICKEL, 500-00798.
91-00555 CONTAINS ITEM 3 IN CLASSIC BRONZE, 500-00799.

ITEM	DESCRIPTION		P/N	QTY.
1	DOOR,L5,33W,R	- -	L5_33W_DOOR_R	1
2	HINGE,CUP,DOOR,110 DEG		500-00971	2
3	LOCK,CAM,STNNKL,C415A	KEY# C415A	500-00798	1
4	PTDBT,CAM, STRAIGHT,1.375	- -	PL5SC-1_375	1

USED ON:
L5-MK33-SN

NEXT ASSY:
- -

MATERIAL:
SEE COMPONENTS

FINISH: - -
- -

APPROVALS		DATE
MODELED	AP	12/16/14
DRAWN	AP	12/19/14

CIRCLED DIMENSIONS ARE CRITICAL INSPECTION DIMENSIONS

UNLESS OTHERWISE SPECIFIED, ALL DIMENSIONS ARE IN INCHES
GENERAL TOLERANCES:
DEC: 1 PLACE +/-0.1 ANGLE: +/-2°
2 PLACE +/-.03 FRAC: +/-1/32
3 PLACE +/-.010
HOLE SIZE: +/-0.002

SCALE = 1/4
SHEET 1 OF 1
PROJECTION: 3RD ANGLE

Middle Atlantic Products, Inc

TITLE DOOR,L5,33W,R
- -

PART NO. L5_33W_DR_ASM
PART REV -

SIZE B
DXF NO. NONE

DWG NO. L5_33W_DR_ASM
DWG REV -

THIS DRAWING CONTAINS TRADE INFORMATION DEEMED TO BE CONFIDENTIAL AND PROPRIETARY PROPERTY OF MIDDLE ATLANTIC PRODUCTS, INC. AND IS TO BE USED ONLY FOR THE PURPOSES FOR WHICH IT IS SUBMITTED AND FURTHER SHALL NOT BE COPIED IN WHOLE OR PART WITHOUT WRITTEN PERMISSION FIRST OBTAINED FROM MIDDLE ATLANTIC PRODUCTS, INC.

DEF-00111 REV G 07/19/12