| ITEM | DESCRIPTION | | P/N | QTY. |
|---|---|---|---|---|
| 1 | GROM,POLYST,3-1/2"X2",BLK | - - | 500-00688 | 1 |
| 2 | SCW,#10X5/8 PAN PHIL FLAKE BLK | - - | 80-001 | 12 |
| 3 | SIDE,L5,TUR,L | - - | L5T_SIDE_L | 1 |
| 4 | WOOD PANEL CLIP | - - | 500-01324 | 6 |

NOTE(S):
1. DIMENSIONS SHOWN ARE IN THE FORMAT IN [MM]
2. ITEMS 1, 2, AND 3 ARE LOCATED IN HARDWARE KIT 91-00562.

IMPORTANT NOTE:
1. CURRENT WOOD REVISION REMOVED MILLED POCKETS; USE NEW CLIPS: MAP PART NO. 500-01324 (LEFT)
2. PRIOR REVISION WOOD WITH MILLED POCKETS: USE PWSC OR 500-01324 WITH (2) TPWSCSHIM ((2) 25 PACK SUPPLIED) (RIGHT)

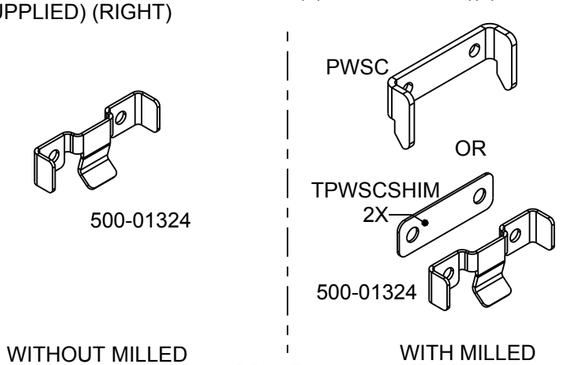


WITHOUT MILLED POCKETS

SCALE 1/2

WITH MILLED POCKETS

| REV | DESCRIPTION | REV BY | REV DATE | APP'D BY | DATE APP. |
|---|---|---|---|---|---|
| - | PRODUCTION RELEASE | /// | ///// | RHP | 03/16/15 |
| A | EC-6961 REMOVED MILLED POCKETS; NEW WOOD CLIPS | MPK | 08/20/15 | JIP | 08/25/15 |
| B | EC-9949 REMOVED DRAWER CUT OUT; ADDED AS OPTIONAL | JMS | 09/12/17 | RHP | 09/12/17 |

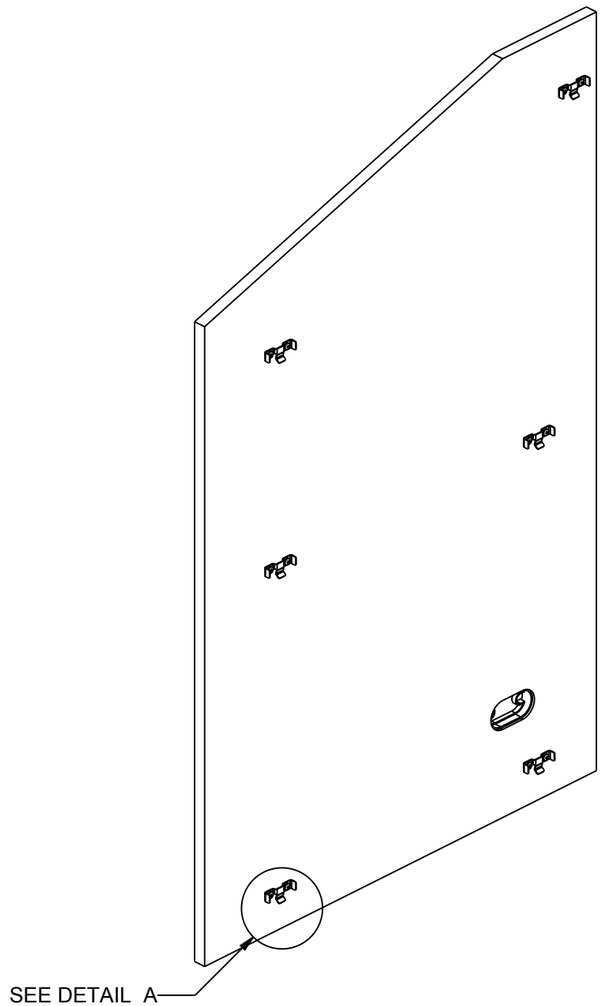


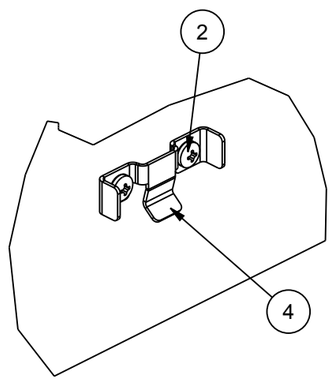


DETAIL A
SCALE 1/2

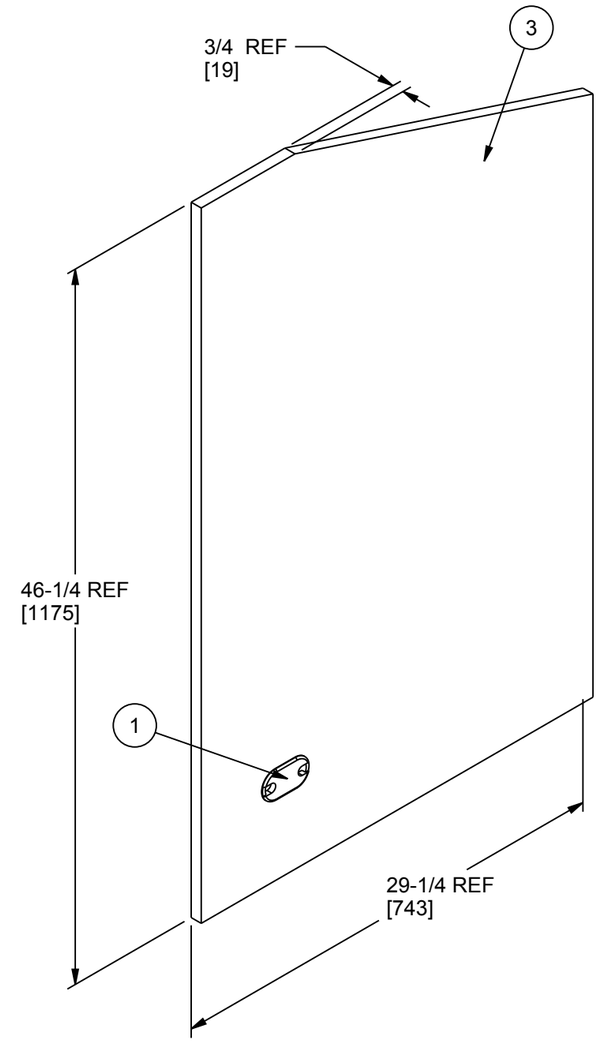


| | | | |
|---|---|---|---|
| USED ON: L5-MK43-SN | APPROVALS | DATE | Middle Atlantic Products, Inc |
| | MODELED AP | 12/16/14 | |
| MATERIAL: SEE COMPONENTS | DRAWN AP | 12/17/14 | TITLE SIDE,L5,TUR,L - - |
| | CIRCLED DIMENSIONS ARE CRITICAL INSPECTION DIMENSIONS | | |
| FINISH: - - - - | UNLESS OTHERWISE SPECIFIED, ALL DIMENSIONS ARE IN INCHES GENERAL TOLERANCES: DEC: 1 PLACE +/-0.1 ANGLE: +/-1° 2 PLACE +/-.03 FRAC: +/-1/32 3 PLACE +/-.010 HOLE SIZE: +/-0.002 | | PART NO. L5T_SL_ASM — PART REV B |
| SCALE = 1/8 | PROJECTION: 3RD ANGLE | | SIZE B — MFG NO. NONE |
| SHEET 1 OF 1 | | | DWG NO. L5T_SL_ASM — DWG REV B |

THIS DRAWING CONTAINS TRADE INFORMATION DEEMED TO BE CONFIDENTIAL AND PROPRIETARY PROPERTY OF MIDDLE ATLANTIC PRODUCTS, INC. AND IS TO BE USED ONLY FOR THE PURPOSES FOR WHICH IT IS SUBMITTED AND FURTHER SHALL NOT BE COPIED IN WHOLE OR PART WITHOUT WRITTEN PERMISSION FIRST OBTAINED FROM MIDDLE ATLANTIC PRODUCTS, INC.

DEF-00111 REV J 11/21/16