REV	DESCRIPTION	REV BY	REV DATE	APP'D BY	DATE APP.
-	PRODUCTION RELEASE	///	/////	RHP	03/16/15

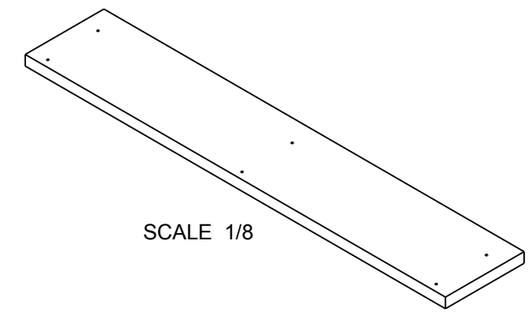

SCALE 1/8

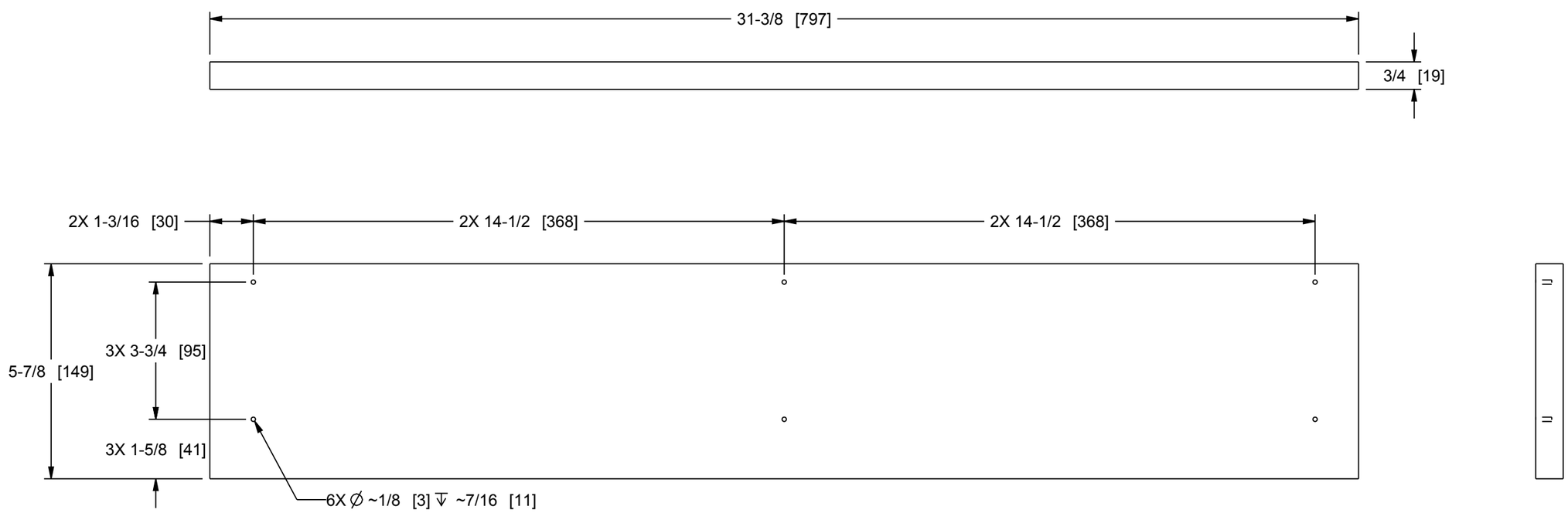

NOTE(S):
1. THICKNESS OF WOOD IS CRITICAL. OUR RECOMMENDATION IS 3/4 [19] WOOD.
2. USE HARDWARE KIT 91-00563.
3. DIMENSIONS GIVEN IN INCHES [MM].

USED ON: L5-MK33-SN

NEXT ASSY: - -

MATERIAL: SEE NOTE(S)

FINISH: - -
- -

APPROVALS		DATE
MODELED	AP	12/16/14
DRAWN	AP	12/17/14

CIRCLED DIMENSIONS ARE CRITICAL INSPECTION DIMENSIONS

UNLESS OTHERWISE SPECIFIED, ALL DIMENSIONS ARE IN INCHES
GENERAL TOLERANCES:
DEC: 1 PLACE +/-0.1 ANGLE: +/-2°
2 PLACE +/-.03 FRAC: +/-1/32
3 PLACE +/-.010
HOLE SIZE: +/-0.002

SCALE = 5/16

SHEET 1 OF 1

PROJECTION: 3rd ANGLE

Middle Atlantic Products, Inc

TITLE MID,FRNT,L5,33W
- -

PART NO. L5_33W_MID_FRNT — PART REV -

SIZE B — DXF NO. - -

DWG NO. L5_33W_MID_FRNT — DWG REV -

THIS DRAWING CONTAINS TRADE INFORMATION DEEMED TO BE CONFIDENTIAL AND PROPRIETARY PROPERTY OF MIDDLE ATLANTIC PRODUCTS, INC. AND IS TO BE USED ONLY FOR THE PURPOSES FOR WHICH IT IS SUBMITTED AND FURTHER SHALL NOT BE COPIED IN WHOLE OR PART WITHOUT WRITTEN PERMISSION FIRST OBTAINED FROM MIDDLE ATLANTIC PRODUCTS, INC.

DSF-0011-REV-G-011912