REV	DESCRIPTION	REV BY	REV DATE	APP'D BY	DATE APP.
-	PRODUCTION RELEASE	///	/////	RHP	12/12/14

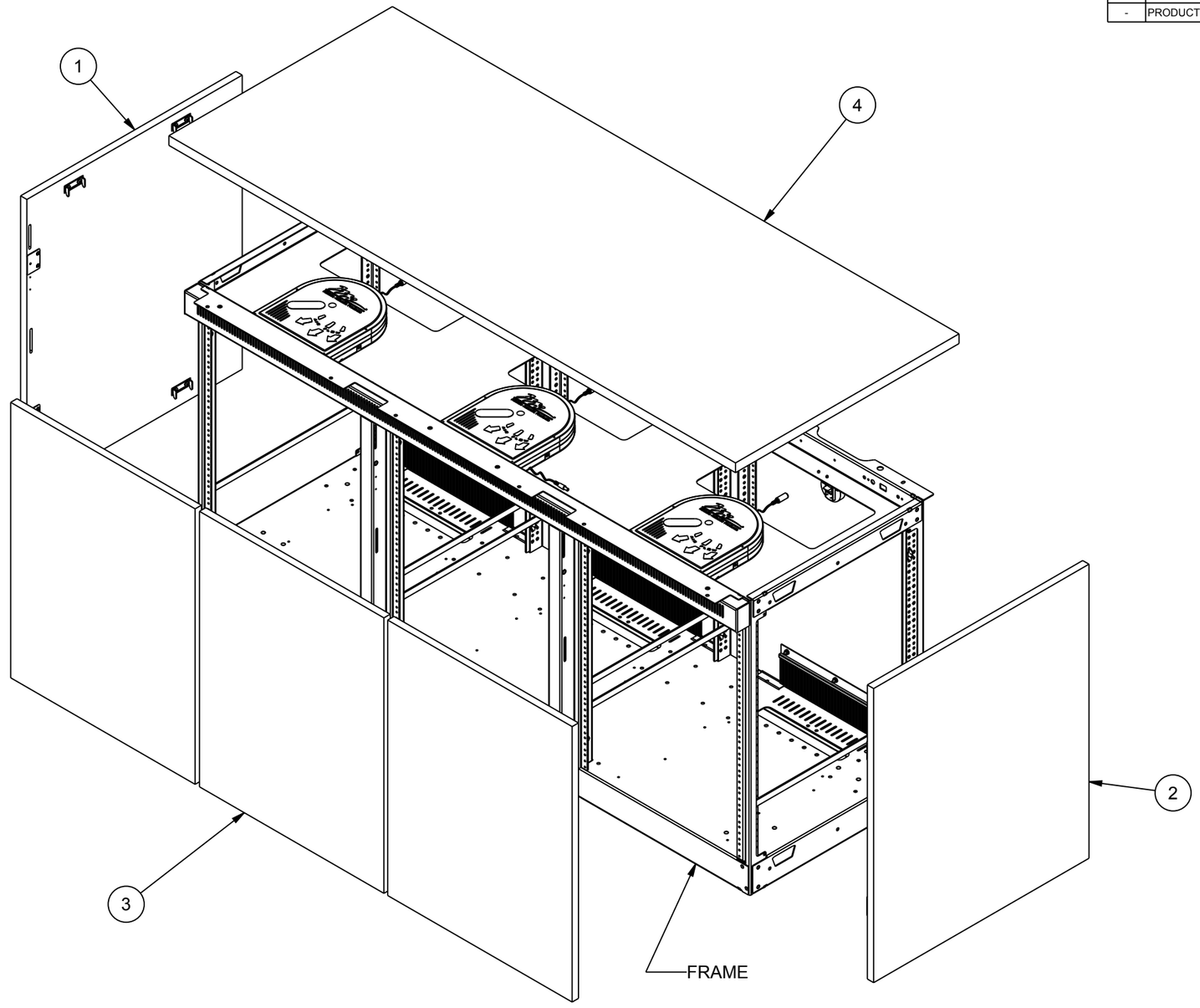

ITEM	DESCRIPTION	P/N	QTY.
1	ASSYD, C5, 27D, LEFT, SIDE - -	C5_27D_L_SD_ASSY	1
2	ASSYD, C5, 27D, RIGHT, SIDE - -	C5_27D_R_SD_ASSY	1
3	ASSYD, C5, LEFT, DOOR - -	C5_LEFT_DR_ASSY	3
4	C5, 3BAY, 27D, TOP - -	C5_3BAY_27D_TOP	1

NOTE:
1) SEE SHEET #2 FOR DIMENSIONAL VIEWS

USED ON: C5-MK27-3	APPROVALS	DATE
	MODELED RHP	11/12/14
	DRAWN RAR	11/24/14
NEXT ASSY:	CIRCLED DIMENSIONS ARE CRITICAL INSPECTION DIMENSIONS	
MATERIAL: SEE COMPONENTS	UNLESS OTHERWISE SPECIFIED, ALL DIMENSIONS ARE IN INCHES GENERAL TOLERANCES: DEC: 1 PLACE +/-0.1 ANGLE: +/-2° 2 PLACE +/-.03 FRAC: +/-1/32 3 PLACE +/-.010 HOLE SIZE: +/-0.002	
FINISH: - - - -	SCALE = 0.094	PROJECTION: 3° ANGLE
	SHEET 1 OF 2	

Middle Atlantic Products, Inc

TITLE: C5, MILLWORK, KIT, 3BAY - -

PART NO.: C5-MK27-3_ASSY — PART REV: -

SIZE: B — DXF NO.: NONE

DWG NO.: C5-MK27-3_ASSY — DWG REV: -

THIS DRAWING CONTAINS TRADE INFORMATION DEEMED TO BE CONFIDENTIAL AND PROPRIETARY PROPERTY OF MIDDLE ATLANTIC PRODUCTS, INC. AND IS TO BE USED ONLY FOR THE PURPOSES FOR WHICH IT IS SUBMITTED AND FURTHER SHALL NOT BE COPIED IN WHOLE OR PART WITHOUT WRITTEN PERMISSION FIRST OBTAINED FROM MIDDLE ATLANTIC PRODUCTS, INC.

DOC-DWG11 REV-C07/19/12

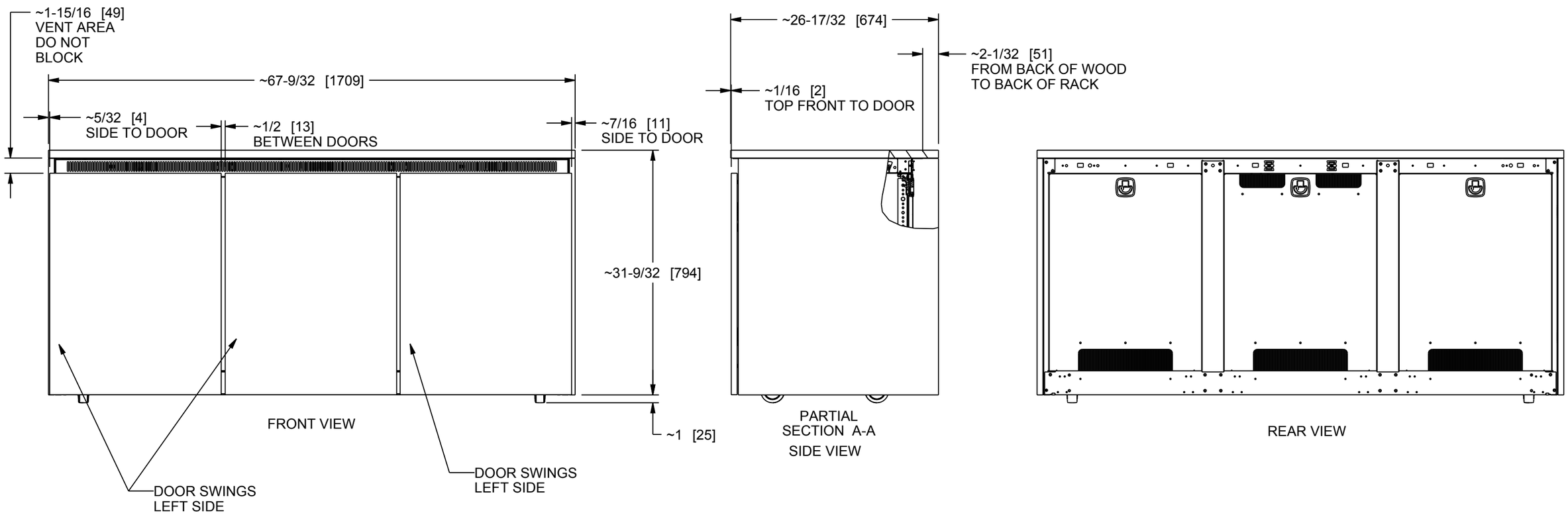

NOTE:
1) DIMENSIONS SHOWN ARE IN INCHES [MM].

USED ON: C5-MK27-3	APPROVALS	DATE	Middle Atlantic Products, Inc
	MODELED RHP	11/12/14	
	DRAWN RAR	11/24/14	
NEXT ASSY:	CIRCLED DIMENSIONS ARE CRITICAL INSPECTION DIMENSIONS		TITLE C5, MILLWORK, KIT, 3BAY - -
MATERIAL: SEE COMPONENTS	UNLESS OTHERWISE SPECIFIED, ALL DIMENSIONS ARE IN INCHES GENERAL TOLERANCES: DEC: 1 PLACE +/-0.1 ANGLE: +/-2° 2 PLACE +/-.03 FRAC: +/-1/32 3 PLACE +/-.010 HOLE SIZE: +/-0.002		PART NO. C5-MK27-3_ASSY — PART REV -
FINISH: - - - -	SCALE = 0.078	PROJECTION: 3rd ANGLE	SIZE B — DXF NO. NONE
	SHEET 2 OF 2		DWG NO. C5-MK27-3_ASSY — DWG REV -

THIS DRAWING CONTAINS TRADE INFORMATION DEEMED TO BE CONFIDENTIAL AND PROPRIETARY PROPERTY OF MIDDLE ATLANTIC PRODUCTS, INC. AND IS TO BE USED ONLY FOR THE PURPOSES FOR WHICH IT IS SUBMITTED AND FURTHER SHALL NOT BE COPIED IN WHOLE OR PART WITHOUT WRITTEN PERMISSION FIRST OBTAINED FROM MIDDLE ATLANTIC PRODUCTS, INC.

DEF-00111 REV G 07/19/12