REV	DESCRIPTION	REV BY	REV DATE	APP'D BY	DATE APP.
-	PRODUCTION RELEASE	///	/////	RHP	12/12/14
A	EC6961 REMOVED MILLED POCKETS, NEW WOOD CLIPS	MPK	04/29/15	JIP	09/04/15

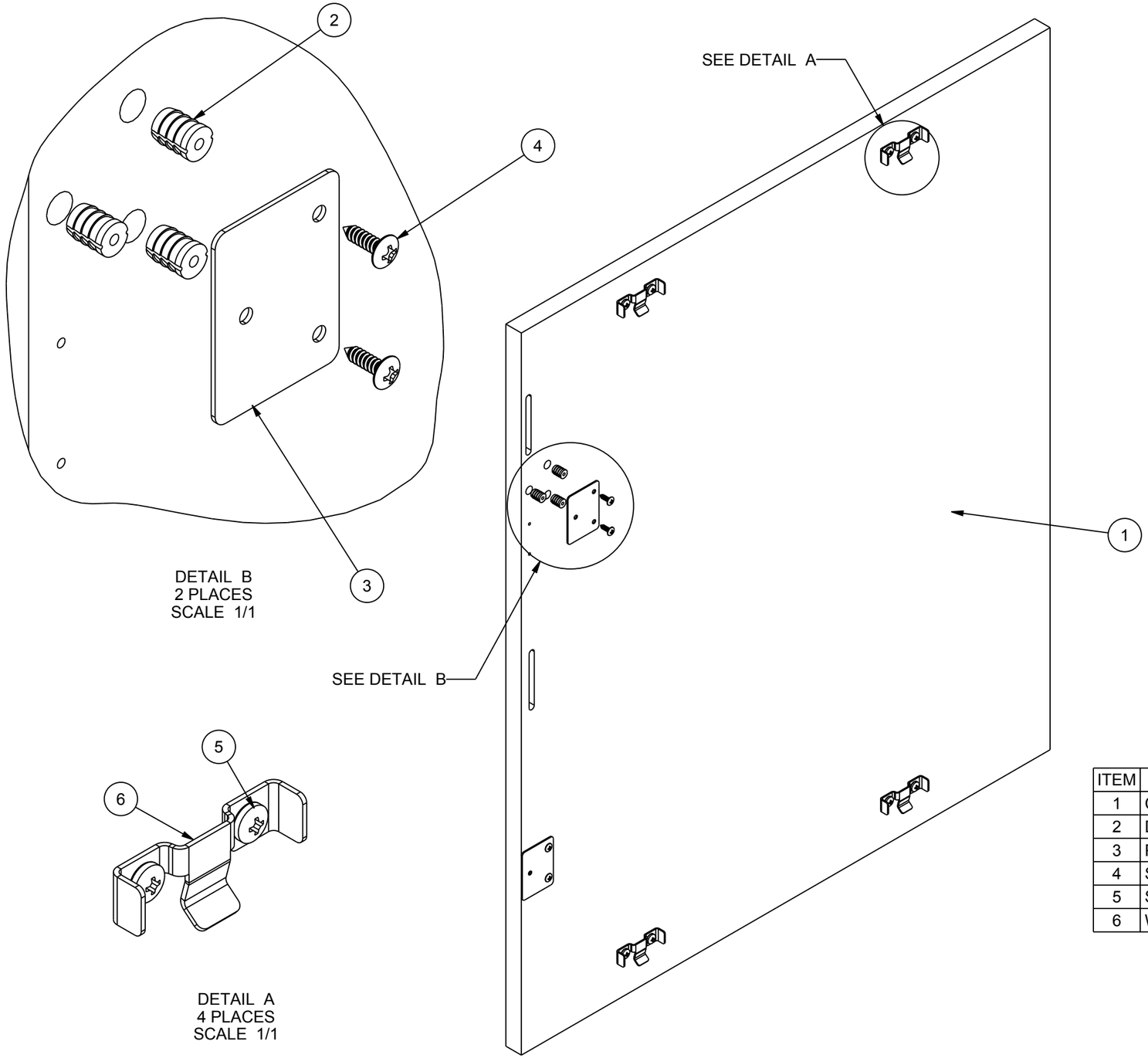

DETAIL B
2 PLACES
SCALE 1/1

DETAIL A
4 PLACES
SCALE 1/1

IMPORTANT NOTE:
1. CURRENT WOOD REVISION REMOVED MILLED POCKETS; USE NEW CLIPS: MAP PART NO. 500-01324 (LEFT)
2. PRIOR REVISION WOOD WITH MILLED POCKETS: USE PWSC OR 500-01324 WITH (3) TPWSCSHIM (25 PACK SUPPLIED) (RIGHT)

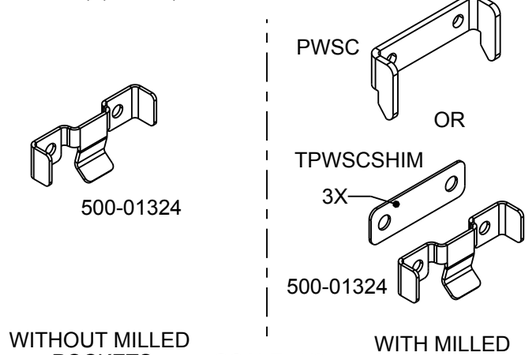

WITHOUT MILLED POCKETS

SCALE 1/2

WITH MILLED POCKETS

NOTE:
1) USE HARDWARE KIT 91-00547

ITEM	DESCRIPTION		P/N	QTY.
1	C5, 27D, LEFT, SIDE	- -	C5_27D_LEFT_SIDE	1
2	DOWELL,WOOD,8MM	FOR DOOR HINGES	8MMPD	6
3	PTDF,PLATE,HINGE MOUNT	EDIT CENTER	PECSBHMP	2
4	SCREW,TH,PHL,SM,6X.5,BLK	- -	500-00422	4
5	SCW,#10X5/8 PAN PHIL FLAKE BLK	- -	80-001	8
6	WOOD PANEL CLIP	- -	500-01324	4

USED ON:
C5-MK27-X

NEXT ASSY:
- -

MATERIAL:
SEE COMPONENTS

FINISH: - -
- -

APPROVALS		DATE
MODELED	RHP	11/19/14
DRAWN	RAR	11/19/14

CIRCLED DIMENSIONS ARE CRITICAL INSPECTION DIMENSIONS

UNLESS OTHERWISE SPECIFIED, ALL DIMENSIONS ARE IN INCHES
GENERAL TOLERANCES:
DEC: 1 PLACE +/-0.1 ANGLE: +/-2°
2 PLACE +/-.03 FRAC: +/-1/32
3 PLACE +/-.010
HOLE SIZE: +/-0.002

SCALE = 1/4
SHEET 1 OF 1
PROJECTION: 3rd ANGLE

Middle Atlantic Products, Inc

TITLE ASSYD, C5, 27D, LEFT, SIDE
- -

PART NO. C5_27D_L_SD_ASSY — PART REV A

SIZE B — DXF NO. - -

DWG NO. C5_27D_L_SD_ASSY — DWG REV A

THIS DRAWING CONTAINS TRADE INFORMATION DEEMED TO BE CONFIDENTIAL AND PROPRIETARY PROPERTY OF MIDDLE ATLANTIC PRODUCTS, INC. AND IS TO BE USED ONLY FOR THE PURPOSES FOR WHICH IT IS SUBMITTED AND FURTHER SHALL NOT BE COPIED IN WHOLE OR PART WITHOUT WRITTEN PERMISSION FIRST OBTAINED FROM MIDDLE ATLANTIC PRODUCTS, INC.

DEF-00111 REV G 07/19/12