REV	DESCRIPTION	REV BY	REV DATE	APP'D BY	DATE APP.
A	PRODUCTION RELEASE	///	/////	AP	06/03/21

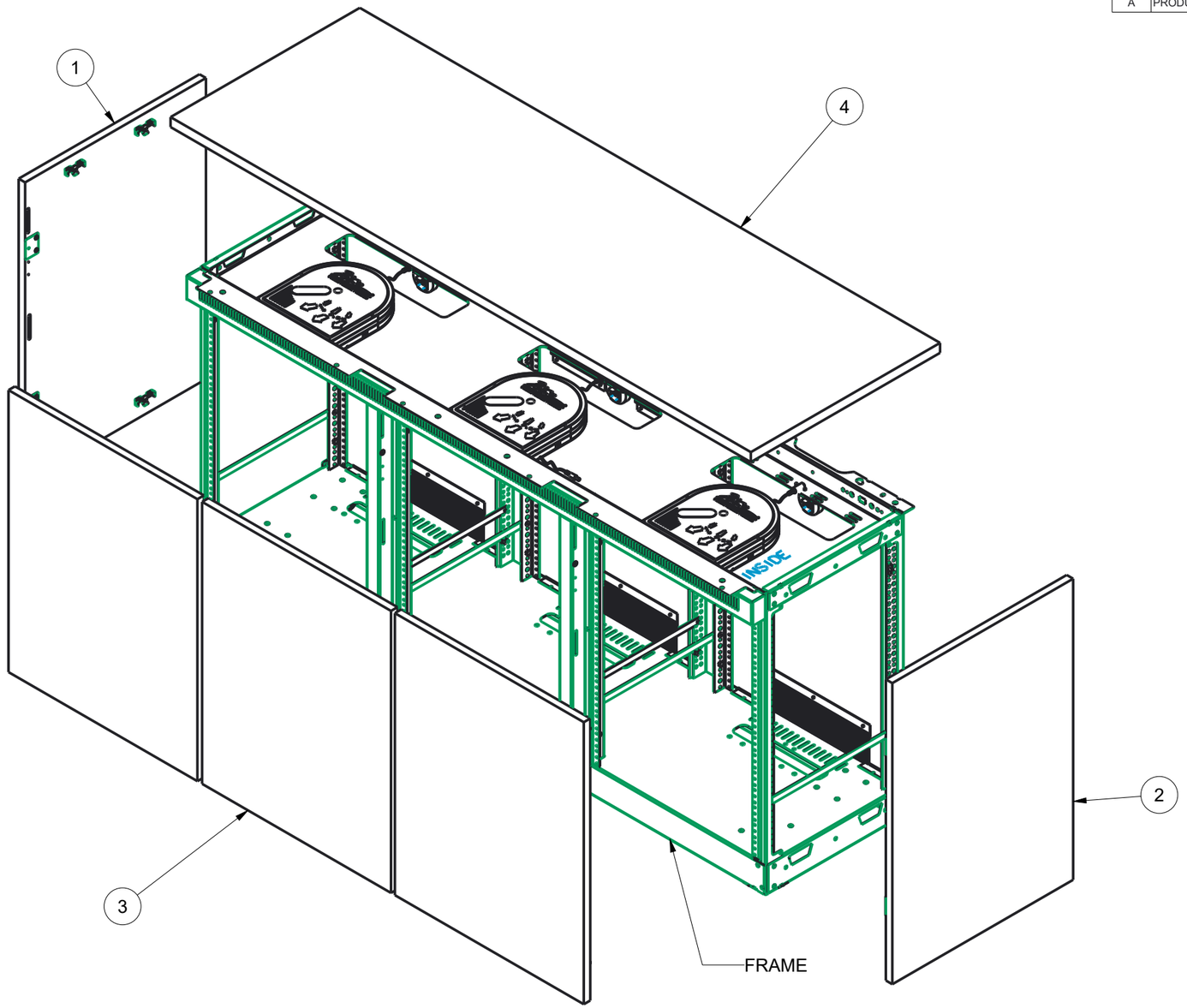

ITEM	DESCRIPTION	P/N	QTY.
1	ASSYD, C5, 22D, LEFT, SIDE - -	C5_22D_L_SD_ASSY	1
2	ASSYD, C5, 22D, RIGHT, SIDE - -	C5_22D_R_SD_ASSY	1
3	ASSYD, C5, LEFT, DOOR - -	C5_LEFT_DR_ASSY	3
4	C5, 3BAY, 22D, TOP - -	C5_3BAY_22D_TOP	1

NOTE:
1) SEE SHEET #2 FOR DIMENSIONAL VIEWS

USED ON: C5-MK22-3

MATERIAL: SEE COMPONENTS

FINISH: - - - -

SCALE = 0.094

SHEET 1 OF 2

PROJECTION: 3RD ANGLE

APPROVALS		DATE
MODELED	RHP	06/03/21
DRAWN	RHP	06/03/21

CIRCLED DIMENSIONS ARE CRITICAL INSPECTION DIMENSIONS

UNLESS OTHERWISE SPECIFIED, ALL DIMENSIONS ARE IN INCHES
GENERAL TOLERANCES:
DEC: 1 PLACE +/-0.1 ANGLE: +/-1°
2 PLACE +/-.03 FRAC: +/-1/32
3 PLACE +/-.010
HOLE SIZE: +/-0.002

Middle Atlantic Products, Inc

TITLE: C5, MILLWORK, KIT, 3BAY - -

PART NO.: C5-MK22-3_ASSY — PART REV: A

SIZE: B — MFG NO.: NONE

DWG NO.: C5-MK22-3_ASSY — DWG REV: A

THIS DRAWING CONTAINS TRADE INFORMATION DEEMED TO BE CONFIDENTIAL AND PROPRIETARY PROPERTY OF MIDDLE ATLANTIC PRODUCTS, INC. AND IS TO BE USED ONLY FOR THE PURPOSES FOR WHICH IT IS SUBMITTED AND FURTHER SHALL NOT BE COPIED IN WHOLE OR PART WITHOUT WRITTEN PERMISSION FIRST OBTAINED FROM MIDDLE ATLANTIC PRODUCTS, INC.

SDC-001 11-02-v 11/21/16

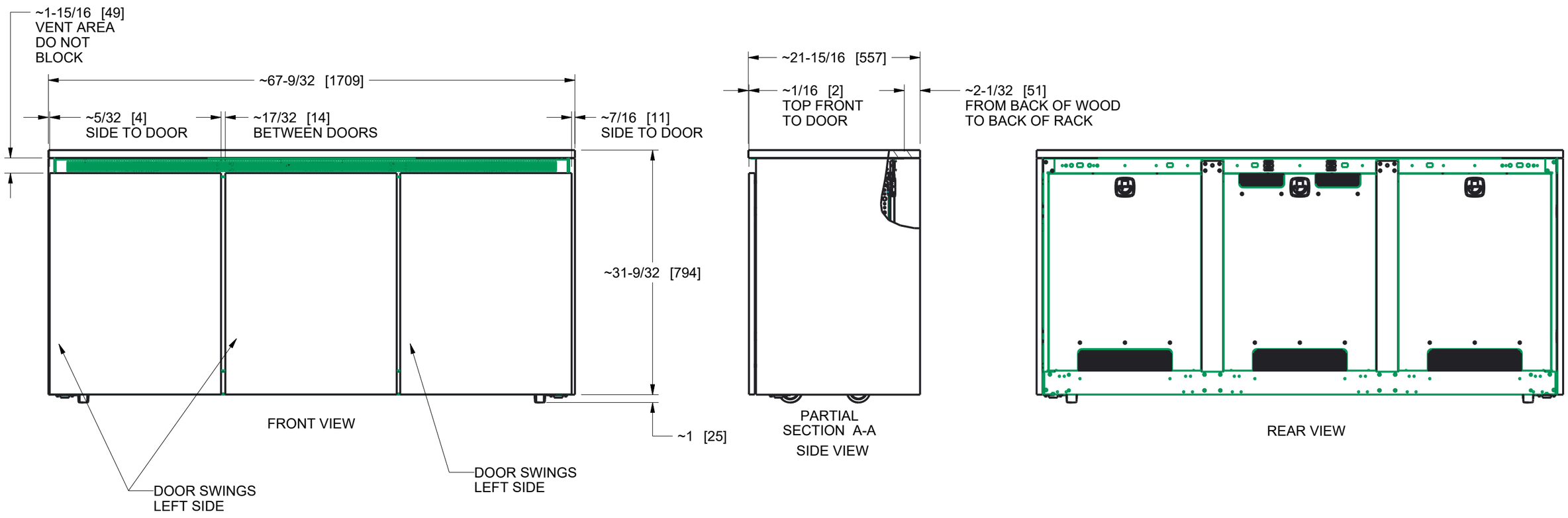

NOTE:
1) DIMENSIONS SHOWN ARE IN INCHES [MM].

USED ON: C5-MK22-3	APPROVALS	DATE	Middle Atlantic Products, Inc
	MODELED RHP	06/03/21	
MATERIAL: SEE COMPONENTS	DRAWN RHP	06/03/21	TITLE C5, MILLWORK, KIT, 3BAY - -
	CIRCLED DIMENSIONS ARE CRITICAL INSPECTION DIMENSIONS		
FINISH: - - - -	UNLESS OTHERWISE SPECIFIED, ALL DIMENSIONS ARE IN INCHES GENERAL TOLERANCES: DEC: 1 PLACE +/-0.1 ANGLE: +/-1° 2 PLACE +/-.03 FRAC: +/-1/32 3 PLACE +/-.010 HOLE SIZE: +/-0.002		PART NO. C5-MK22-3_ASSY — PART REV A
SCALE = 0.078	PROJECTION: 3RD ANGLE		SIZE B — MFG NO. NONE
SHEET 2 OF 2			DWG NO. C5-MK22-3_ASSY — DWG REV A

THIS DRAWING CONTAINS TRADE INFORMATION DEEMED TO BE CONFIDENTIAL AND PROPRIETARY PROPERTY OF MIDDLE ATLANTIC PRODUCTS, INC. AND IS TO BE USED ONLY FOR THE PURPOSES FOR WHICH IT IS SUBMITTED AND FURTHER SHALL NOT BE COPIED IN WHOLE OR PART WITHOUT WRITTEN PERMISSION FIRST OBTAINED FROM MIDDLE ATLANTIC PRODUCTS, INC.

DEF-00111 REV J 11/21/16