City of Baltimore
APPROVED PERMIT SET

The Department of Housing and Community Development's Permits and Code Enforcement division has completed a review of this document for code compliance

PLAN NUMBER: BCCM-26-000642

A "Signature Ready Set" with seals and signatures of the professional responsible for the preparation and content of this document was received by Plans Examining and is available for review at 417 E. Fayette Street, Room 101, Baltimore, Maryland, 21202.

PERMIT ISSUED DATE: 04/29/26

FIRE ALARM SYSTEM SUBMITTAL

ATLANTIC UNION BANK
4004 BOSTON STREET
BALTIMORE, MD 21224

Project Number:	45832320
Installing Contractor:	FIRELINE 4506 HOLLINS FERRY RD BALTIMORE, MD 21227
Submittal Date:	02/03/2026
Equipment Supplier:	FIRELINE
Sales Representative:	GARY HODDINOTT
Designed By:	HERMELA SOLOMON

City of Baltimore

APPROVED PERMIT SET

The Department of Housing and Community Development's Permits and Code Enforcement division has completed a review of this document for code compliance

PLAN NUMBER: BCCM-26-000642

A "Signature Ready Set" with seals and signatures of the professional responsible for the preparation and content of this document was received by Plans Examining and is available for review at 417 E. Fayette Street, Room 101, Baltimore, Maryland, 21202.

PERMIT ISSUED DATE: 04/29/26

Table of Contents

Section 1: General Procedure and Contact Information

Section 2: Bill of Material

Section 3: Battery Calculations

Section 4: Catalog Data Sheets

City of Baltimore
APPROVED PERMIT SET

The Department of Housing and Community Development's Permits and Code Enforcement division has completed a review of this document for code compliance.

PLAN NUMBER: BCCM-26-000642

A "Signature Ready Set" with seals and signatures of the professional responsible for the preparation and content of this document was received by Plans Examining and is available for review at 417 E. Fayette Street, Room 101, Baltimore, Maryland, 21202.

PERMIT ISSUED DATE: 04/29/26

Section 1: General Procedure and Contact Information

The following is a guide to address procedures and provide you with contact information that will be helpful in completing this project.

FIRELINE: **410.247.1422**

SALESPERSON:	Gary Hoddinott	410.977.1054	ghoddinott@fireline.com
DESIGNER:	Hermela Solomon	443.542.7052	hsolomon@fireline.com
PROJECT MANAGER:	Nelson Stapf	240.444-1163	nstapf@fireline.com
SALES LIAISON:	Ryan Malloy	410.991-9510	rmalloy@fireline.com

SALES, SUBMITTAL, OR TECHNICAL QUESTIONS:
Any questions about change orders or pricing should be directed to the Project Manager. Questions related to the information in the drawings or submittal booklets should be directed to the Designer. The Designer or the Project Manager can answer technical questions.

REVIEW COMMENTS:
Any review comments that result from submitting this project should be forwarded to the Designer so they can be incorporated into the drawing set as required.

RELEASING MATERIAL:
Please call or email the Project Manager to release the material for this job. Please allow a lead time of at least ten business days for material orders. Smaller orders may be in stock; larger projects may require longer lead times based on current conditions. If the material is to be delivered to your warehouse or the job site, please allow an additional 3-5 days from the day you request delivery. If material is not delivered to your office, please provide us with the location address, job site contact, phone number of contact, and hours available for delivery.

FABRICATION AND ORDERING GRAPHIC ANNUNCIATORS:
If your job has a graphic annunciator or graphic plaque, please allow a lead time of 2 to 3 weeks for annunciators to be manufactured. Special annunciators and fan/smoke control panels may take longer to determine on a case-by-case basis. The Owner or Owner's Representative must sign the approval box on the graphic drawing and send it, marked up with any corrections, to the designer before ordering. We will need to know if your Graphic Annunciator is surface or recessed when you order the back box.

OPERATIONS AND MAINTENANCE MANUALS:
If you need Operations and Maintenance Manuals, please provide a date by which they are required, allowing us five business days to assemble and send them. If manuals are requested before a project is completed, they can be provided without a 72 form and warranty letter, as those dated documents depend on the completion of the final acceptance test.

SCHEDULING A TECHNICIAN FOR STARTUP OR FINAL INSPECTION:
For the scheduling of Technicians, please call the OP's Specialist. Technicians should be scheduled at least five business days before the requested date. Technicians requested within the 5-business day window are on an "as available basis" and cannot be guaranteed. Before the technician comes out for a startup, the following items should be completed:

- ☐ All devices are installed as shown on the approved drawings. Any deviations or added devices should be marked on the onsite as-built set.

City of Baltimore
APPROVED PERMIT SET

The Department of Housing and Community Development's Permits and Code Enforcement division has completed a review of this document for code compliance

PLAN NUMBER: BCCM-26-000642

A "Signature Ready Set" with seals and signatures of the professional responsible for the preparation and content of this document was received by Plans Examining and is available for review at 417 E. Fayette Street, Room 101, Baltimore, Maryland, 21202.

PERMIT ISSUED DATE: 04/29/26

- ☐ All cabinets, back boxes, or panels should be installed.
- ☐ Permanent power should be available to all applicable panels. Do not apply power to any panel until the Fireline technician is present.
- ☐ All wire should be installed per the submittal drawings and applicable codes.
- ☐ Wires to a panel should be pulled into the cabinet with adequate slack for proper row termination. All wires should be tagged.
- ☐ Wire should be tested to be free of shorts, grounds, and opens.
- ☐ End of Line Resistors should be in place and verified with a meter.
- ☐ If your project has a dialer/communicator that requires telephone lines, RJ31X jacks should be installed and labeled. **If Fireline does not provide you with monitoring**, we will need the following information for the Monitoring Account provider: Live Operator Number, Receive Number, Account Number, Format, and Passcode if needed.

CODE REQUIRED MONITORING INFORMATION:

Fireline provides several different types of monitoring technologies, including cellular and radio (no phone lines required) lines and traditional POTS phone lines. **Digital Phone (VOIP) Lines may not work properly with Fire Alarm equipment.** Please call the Sales Liaison to set up a Monitoring Contract or get a quote.

CODE REQUIRED INSPECTIONS INFORMATION:

The local fire code requires periodic inspections of your system. Fireline must perform the first inspection to keep your system in compliance. For fire code-required inspections of your system, please call the Sales Liaison to get a quote.

SYSTEM SERVICE INFORMATION:

For Service and/or Inspection of your system, telephone the Fireline Corporation at 410.247.1422 and ask for the Operator. The operator will direct you to the proper person who can assist you with your needs. If the call is after normal business hours, The Fireline Corporation maintains a 24-hour answering service, which will contact a service technician to correct the system difficulty.

City of Baltimore
APPROVED PERMIT SET

The Department of Housing and Community Development's Permits and Code Enforcement division has completed a review of this document for code compliance

PLAN NUMBER: BCCM-26-000642

A "Signature Ready Set" with seals and signatures of the professional responsible for the preparation and content of this document was received by Plans Examining and is available for review at 417 E. Fayette Street, Room 101, Baltimore, Maryland, 21202.

PERMIT ISSUED DATE: 04/29/26

Section 2: Bill of Material

Qty.	Manufacturer	Part Number	Description
2	Power Sonic	PS-1270	Battery 12V 9AH
1	Potter	PSN-106B	Power Bobcat 10 Amp BLACK
1	Potter	PAD100-PSDA	Addressable Pull Station, Dual Action
1	Potter	PAD100-NAC	Control Module
1	Potter	PAD300-PD	Analog Head Photo
1	Potter	PAD300-6DB	Detector Base, 6"
4	Wheelock	ELSTWC	Strobe White Ceiling
3	Wheelock	ELHSWC	Horn/Strobe White Ceiling
1	DITEK	DTK-120HW	Surge Protector 120VAC Hard Wire

City of Baltimore
APPROVED PERMIT SET
The Department of Housing and Community Development's Permits and Code Enforcement division has completed a review of this document for code compliance
PLAN NUMBER: BCCM-26-000642
A "Signature Ready Set" with seals and signatures of the professional responsible for the preparation and content of this document was received by Plans Examining and is available for review at 417 E. Fayette Street, Room 101, Baltimore, Maryland, 21202.
PERMIT ISSUED DATE: 04/29/26

Section 3: Battery Calculations

Battery Calculations EXISTING FACP (IPA-60)

IPA-60/100 BATTERY CALCULATION					
System	**Qty**	**Alarm Draw**	**TTL Alarm**	**Standby Draw**	**TTL Standby**
IPA60/100 Main Circuit Board	1	0.2	0.2	0.13	0.13
Communicators					
UD-2000	1	0.023	0.023	0.016	0.016
NAC Power - NAC1-2 3A Rated Circuits, I/O1-2 1A Rated Circuits					
Total NAC Draw NAC 1	1	0.420	0.420		
Total NAC Draw NAC 2	1	0.263	0.263		
Total NAC Draw I/O 1	1	0.4	0.4		
Total NAC Draw I/O 2	1	0.289	0.289		
Addressable Devices					
PAD100/200/300-PD	**2**	0.0003	0.0006	0.0003	0.0006
PAD100-PSSA/PSDA	**7**	0.0002	0.0014	0.0002	0.0014
PAD100-MIM	3	0.0002	0.0006	0.0002	0.0006
PAD100-SIM	2	0.00024	0.00048	0.00024	0.00048
PAD100-DIM	4	0.00024	0.00096	0.00024	0.00096
PAD100-NAC	**1**	0.0002	0.0002	0.0002	0.0002
		TTL Alarm	**1.59924**	**TTL Standby**	**0.15024**
			TTL Alarm Current		**1.60**
			Enter .084 for 5, .25 for 15, or 1 for 60 minutes of alarm	x	**0.084**
			Total Alarm AH		**0.13**

TTL Standby Current		**0.15**
Hours of Standby	x	**24**
Total Standby		**3.61**

Total Alarm + Total Standby= Hours Required		**3.74**
Spare Capacity/Derating Factor 20%		**1.2**
TTL AH Required		**4.49**
Batteries to be Supplied: 2 12VDC	**7AH**	

City of Baltimore
APPROVED PERMIT SET
The Department of Housing and Community Development's Permits and Code Enforcement division has completed a review of this document for code compliance
PLAN NUMBER: BCCM-26-000642
A "Signature Ready Set" with seals and signatures of the professional responsible for the preparation and content of this document was received by Plans Examining and is available for review at 417 E. Fayette Street, Room 101, Baltimore, Maryland, 21202.
PERMIT ISSUED DATE: 04/29/26

Battery Calculations FABP (PSN-106)

FABP BATTERY CALCULATION

A	B	C	D	E	F
Device	Quan.	Standby Current	Total Standby Current (B x C)	MAX Alarm Current	Total Alarm Current (B x E)
STANDBY CALCULATIONS					
PSN-106	1	0.075	0.075	0.075	0.075
TOTAL CURRENT USED	1			10.000	10.000
Total standby current. Sum of column D			0.075		
Enter 4, 24, or 60 for standby hours needed.		x	24		
Total standby AH (Amp Hours).			1.800		
ALARM CALCULATIONS					
Total alarm current. Sum of column F					10.08
Enter 0.084 for 5, 0.25 for 15, or 1 for 60 minutes of Alarm				x	0.084
Total alarm AH					0.85
REQUIRED STANDBY					
Total AH needed. Sum of Standby and Alarm AH					2.65
Spare Capacity/Derating factor 20%					1.20
Total AH required					**3.18**
			Battery Supplied: 2 12 VDC:	**7 AH**	

The purpose of this calculation is to show that under a full load this panel will not need a battery larger than 7 ah.
For actual individual panel loads see circuit calculations sheet.

City of Baltimore
APPROVED PERMIT SET
The Department of Housing and Community Development's Permits and Code Enforcement division has completed a review of this document for code compliance
PLAN NUMBER: BCCM-26-000642
A "Signature Ready Set" with seals and signatures of the professional responsible for the preparation and content of this document was received by Plans Examining and is available for review at 417 E. Fayette Street, Room 101, Baltimore, Maryland, 21202.
PERMIT ISSUED DATE: 04/29/26

Circuit Calculations Audio/Visual

FACP AUDIO/VISUAL CIRCUIT CALCULATIONS (X'S ARE VARIABLES)

DEVICE TYPE :	ELHSX/ELHSCX				ELSTX/ELSTCX				Existing	6.0A : RATING				Min EOLV
DEVICE CURRENT :	.035	.042	.069	.096	.017	.022	.053	.079	Load	4.8A : MAX AT 80%				16V
CANDELA :	15cd	30cd	75cd	110cd	15cd	30cd	75cd	110cd		TOTAL A	GA	DIS	VOLT- DROP	EOLV
FACP1-1									.040A	.040A	14		.000V	20.40V
FACP1-2									0.289	.289A	14		.000V	20.40V
FACP1-I/O1									0.342	.342A	14		.000V	20.40V
FACP1-I/O2									0.263	.263A	14		.000V	20.40V
TOTALS	**0**	**0**	**0**	**0**	**0**	**0**	**0**	**0**		**.934A**	: AMPS USED		SPARE:	**3.866A**

FABP1

DEVICE TYPE :	ELHSX/ELHSCX				ELSTX/ELSTCX				Existing	10.0A : RATING				Min EOLV
DEVICE CURRENT :	.035	.042	.069	.096	.017	.022	.053	.079	Load	8.0A : MAX AT 80%				16V
CANDELA :	15cd	30cd	75cd	110cd	15cd	30cd	75cd	110cd		TOTAL A	GA	DIS	VOLT- DROP	EOLV
FABP1-1	2		1		4					.207A	14	200'	.254V	20.15V
FABP1-2(SPARE)										.000A	14		.000V	20.40V
FABP1-3 (SPARE)										.000A	14		.000V	20.40V
FABP1-4 (SPARE)										.000A	14		.000V	20.40V
FABP1-5 (SPARE)										.000A	14		.000V	20.40V
FABP1-6 (SPARE)										.000A	14		.000V	20.40V
TOTALS	**2**	**0**	**1**	**0**	**4**	**0**	**0**	**0**		**.207A**	: AMPS USED		SPARE:	**7.793A**

City of Baltimore
APPROVED PERMIT SET

The Department of Housing and Community Development's Permits and Code Enforcement division has completed a review of this document for code compliance

PLAN NUMBER: BCCM-26-000642

A "Signature Ready Set" with seals and signatures of the professional responsible for the preparation and content of this document was received by Plans Examining and is available for review at 417 E. Fayette Street, Room 101, Baltimore, Maryland, 21202.

PERMIT ISSUED DATE: 04/29/26

Section 4: Catalog Data Sheets

Potter	PSN-106 (Black Enclosure)
Potter	PAD100-PSSA PSDA Addressable Manual Station
Potter	PAD300-PD Photoelectric Smoke Detector
Wheelock	Eluxa Series Horns and Strobes
Power Sonic	PS-1270 Batteries

POWER PS SONIC
TRUSTED BATTERY SOLUTIONS

General Purpose | Emergency Lighting | Medical | Fire & Security

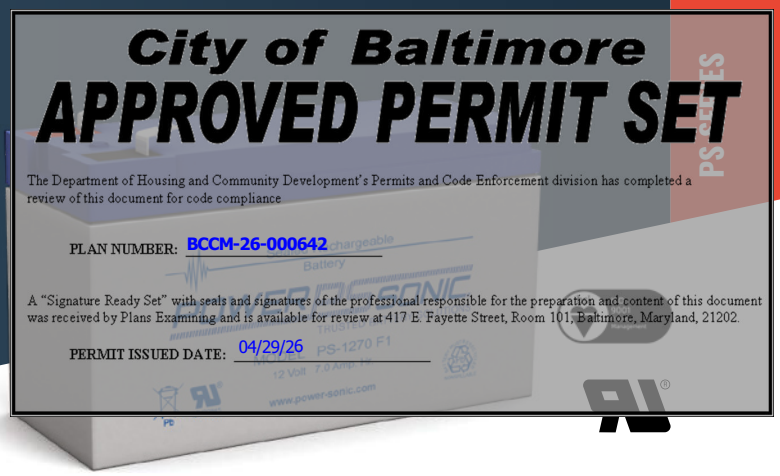

PS-1270

12V 7.0 AH @ 20-hr.
12V 6.5 AH @ 10-hr.

Rechargeable Sealed Lead Acid Battery
PS – General Purpose Series

TERMINALS: (mm)

F1: Quick disconnect tabs, 0.187" x 0.032" – Mate with AMP. INC. FASTON "187" series

F2: Quick disconnect tabs, 0.250" x 0.032" – Mate with AMP. INC FASTON "250" series

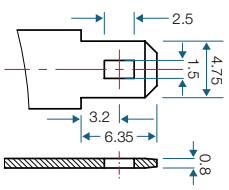

OR

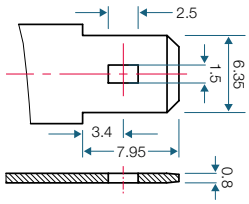

Torque – Not Applicable

Torque – Not Applicable

DIMENSIONS: inch (mm)

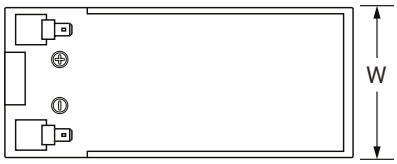

L: 5.95 (151)
W: 2.56 (65)
H: 3.70 (94)
HT: 3.86 (98)

Tolerances are +/- 0.04 in. (+/- 1mm) and +/- 0.08 in. (+/- 2mm) for height dimensions. All data subject to change without notice.

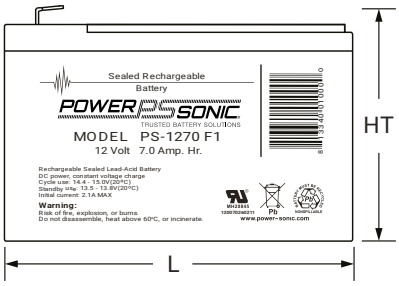

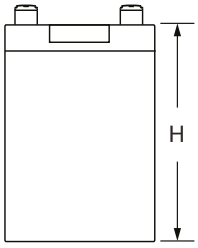

FEATURES

- Absorbent Glass Mat (AGM) technology for superior performance
- Valve regulated, maintenance free spill proof construction
- Power/volume ratio yielding excellent energy density
- Rugged vibration and impact resistant ABS case and cover
- Gas recombination technology
- 5 year design life

APPROVALS

- Approved for transport by air. D.O.T., I.A.T.A., F.A.A. and C.A.B. certified
- U.L. recognized
- ISO9001:2015 – Quality management systems

PERFORMANCE SPECIFICATIONS

Nominal Voltage	12 volts (6 cells)
Nominal Capacity	
20-hr. (350mA to 10.50 volts)	7.00 AH
10-hr. (650mA to 10.50 volts)	6.50 AH
5-hr. (1.2A to 10.20 volts)	6.00 AH
1-hr. (4.5A to 9.00 volts)	4.50 AH
Approximate Weight	4.80 lbs. (2.18 kg)
Internal Resistance (approx.)	23.0 milliohms
Max Short-Duration Discharge Current (10 Sec.)	70.0 amperes
Shelf Life (% of nominal capacity at 68°F (20°C)	
1 Month	97%
3 Month	91%
6 Month	83%
Operating Temperature Range	
Charge	5°F (-15°C) to 122°F (50°C)
Discharge	-4°F (-20°C) to 140°F (60°C)
Case	ABS Plastic
Power Sonic Chargers	PSC-12800A-C PSC-121000-PC

CORPORATE HEADQUARTERS
(USA AND INTERNATIONAL EXCLUDING EMEA)
Power-Sonic Corporation
7550 Panasonic Way, San Diego,
California 92154
T: +1 (619) 661 2020
F: +1 (619) 661 3650
E: customer-service@power-sonic.com

POWER-SONIC EUROPE LIMITED
(EMEA – EUROPE, MIDDLE EAST AND AFRICA)
3 Buckingham Square,
Hurricane Way, Wickford,
Essex SS11 8YQ
T: +44 (0)1268 560686
F: +44 (0)1268 560902
E: salesEMEA@power-sonic.com

To ensure safe and efficient operation always refer to the latest edition of our Technical Manual, as published on our website.
© 2018. Power-Sonic Corporation. All rights reserved. All trademarks are the property of their respective owners.
All data subject to change without notice. E&O.E

POWER PS SONIC
TRUSTED BATTERY SOLUTIONS

City of Baltimore
APPROVED PERMIT SET
The Department of Housing and Community Development's Permits and Code Enforcement division has completed a review of this document for code compliance
PLAN NUMBER: BCCM-26-000642
A "Signature Ready Set" with seals and signatures of the professional responsible for the preparation and content of this document was received by Plans Examining and is available for review at 417 E. Fayette Street, Room 101, Baltimore, Maryland, 21202.
PERMIT ISSUED DATE: 04/29/26

PS-1270

12V 7.0 AH @ 20-hr.
12V 6.5 AH @ 10-hr.

Rechargeable Sealed Lead Acid Battery
PS – General Purpose Series

SHELF LIFE & STORAGE

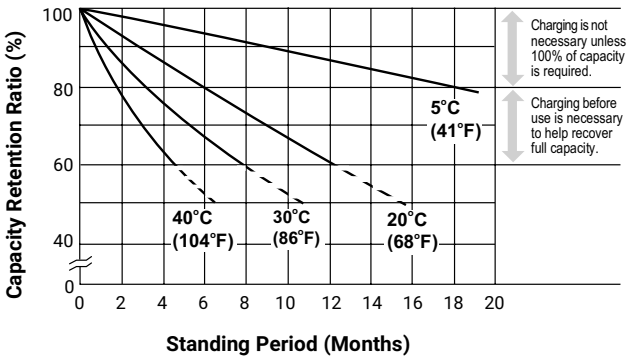

LIFE CHARACTERISTICS IN STAND-BY USE

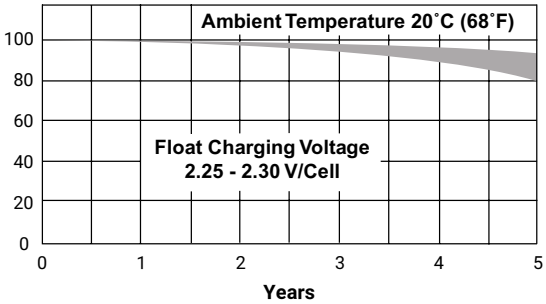

CHARGING

Cycle Applications: Apply constant voltage charge at 2.35v/c – 2.45v/c (14.1 – 14.7v for 12v Monobloc) at 20°C. Initial charging current should be set at less than 0.25C Amps. Switch to float charge to avoid overcharging.

"Float" or "Stand-By" Service: Apply constant voltage charge of 2.25v/c – 2.30v/c (13.5 to 13.8 volts for 12v Monobloc at 20°C. When held at this voltage, the battery will seek its own current level and maintain itself in a fully charged condition.

Temperature Compensation: Charging Voltage for both Cyclic and Standby applications should be regulated in relation to ambient temperature. As temperature rises charging voltage should be reduced to prevent overcharge and increased as temperature falls to avoid undercharge.

For further charging information including temperature compensation factors, see Power Sonic Technical Manual/ Power Sonic Charger specifications.

APPLICATIONS

- General purpose
- Emergency lighting
- Medical
- Fire and security

CHARGERS

Power Sonic offers a wide range of chargers suitable for batteries with a variety of capacities.

Please refer to our website for more information on our switch mode and transformer type chargers.

Please contact our technical department for advice if you have difficulty in locating a suitable charger.

FURTHER INFORMATION

Please refer to our website **www.power-sonic.com** for a complete range of useful downloads, such as product catalogs, material safety data sheets (MSDS), ISO certification, etc.

CORPORATE HEADQUARTERS
(USA AND INTERNATIONAL EXCLUDING EMEA)
Power-Sonic Corporation
7550 Panasonic Way, San Diego,
California 92154
T: +1 (619) 661 2020
F: +1 (619) 661 3650
E: customer-service@power-sonic.com

POWER-SONIC EUROPE LIMITED
(EMEA – EUROPE, MIDDLE EAST AND AFRICA)
3 Buckingham Square,
Hurricane Way, Wickford,
Essex SS11 8YQ
T: +44 (0)1268 560686
F: +44 (0)1268 560902
E: salesEMEA@power-sonic.com

To ensure safe and efficient operation always refer to the latest edition of our Technical Manual, as published on our website.
© 2018. Power-Sonic Corporation. All rights reserved. All trademarks are the property of their respective owners.
All data subject to change without notice. E&O.E

POTTER
The Symbol of Protection

City of Baltimore
APPROVED PERMIT SET
The Department of Housing and Community Development's Permits and Code Enforcement division has completed a review of this document for code compliance
PLAN NUMBER: BCCM-26-000642
A "Signature Ready Set" with seals and signatures of the professional responsible for the preparation and content of this document was received by Plans Examining and is available for review at 417 E. Fayette Street, Room 101, Baltimore, Maryland, 21202.
PERMIT ISSUED DATE: 04/29/26

Power Supplies

Features

- PSN-64 has 6 amps regulated with 4 outputs
- PSN-106 has 10 amps regulated with 6 outputs
- May be configured as up to three class "A" Style "Z" notification circuits
- Two Trouble relays (5A at 30VDC) General System Trouble (programmable for AC delay) Low AC Trouble with optional delay settings
- Diagnostic LED's Status LED's for Active NAC and NAC Trouble conditions.
- Quadrasync feature synchronizes strobes from AMSECO, Gentex, Cooper-Wheelock and System Sensor.
- Configurable output circuits (DIP switch sets options for each circuit)
- Reference EOL allows 2K – 27K EOL value to be used
- Pass Thru mode allows the outputs to match the input signal from FACP

SIGNALING C UL US LISTED

Description

The PSN series of notification power supplies offers reliable notification power with unprecedented versatility. The power supplies offer either 6 or 10 amps of continuous power through 4 or 6 outputs respectively. Each output is rated at 3 amps and it may be used continuously without any derating. The power supply operates on either 120 VAC or 220 VAC power input and has a regulated 24 VDC output. In addition, the power supply can charge up to 55 AH batteries and leads the industry in housing up to 18 AH batteries. The cabinet is constructed out of 18 gauge cold rolled steel and has a durable red powder coat finish. In addition, a key lock is provided for securing the door. Ample electrical knockouts are provided on the sides and the top, allowing the installer options for running wires and maintaining the correct separations.

The power supply offers an industry leading Quadrasync function that allows for multiple strobe circuits of different brands to be synchronized to flash at the same time. The power supply can have four different brands each connected to its own circuit and all the strobes flash together. Each output can independently be configured to provide one of four synchronizations or steady power. This provides unequivocal flexibility in new and retrofit installations. The power supply can be configured to synchronize AMSECO®, Gentex®, Wheelock® and System Sensor® strobe devices. Each output can be configured to the same sync protocol or set independently. In addition, the power supply has an input Pass Thru mode which allows the outputs to follow the input signal from a non-supported synchronization protocol. The power supply will recognize the type of input being supplied and pass this through to the outputs with the same pattern. This input pass through can be selected on each output independently. The power supply contains simple dipswitch programming and LED indicators providing the installer the ability to correct any possible faults. A Trouble Memory is provided to allow an installer to review past troubles and make the necessary repairs. Each output has an LED to pinpoint the exact circuit where a trouble may have occurred. Relays are provided for monitoring the general system and AC failure. Each output and be independently configured for various applications and installations. Each output can be independently configured for Class A or Class B operation, constant power, ANSI Temporal Code 3, Single, Multiple or Combo Inputs or Door Holder Power.

Technical Specifications

Size (H x W x D)	16 1/8" W x 16 ¾" W x 3 ½" D
Enclosure	Eighteen (18) gauge sheet steel with hinged, locked door
Power Input	120VAC @ 60Hz 220/240VAC @ 50Hz 5.1 Amps @ 120 VAC 2.5 Amps @ 240 VAC
Current	75mA Standby & Alarm (no external load)
Input Voltage Trigger	15mA @ 8 – 33 VDC
Terminals	18-12 AWG
Temperature	32° F to 120°F (0°C to 49°C) with a maximum humidity of 93% non-condensing
NAC Output	3 Amp max per NAC, Regulated
Battery Charging	27.3 @ 1A, can support 7 – 55Ah batteries

POTTER
The Symbol of Protection

City of Baltimore
APPROVED PERMIT SET
The Department of Housing and Community Development's Permits and Code Enforcement division has completed a review of this document for code compliance
PLAN NUMBER: BCCM-26-000642
A "Signature Ready Set" with seals and signatures of the professional responsible for the preparation and content of this document was received by Plans Examining and is available for review at 417 E. Fayette Street, Room 101, Baltimore, Maryland, 21202.
PERMIT ISSUED DATE: 04/29/26

PSN-106 Wiring Diagram

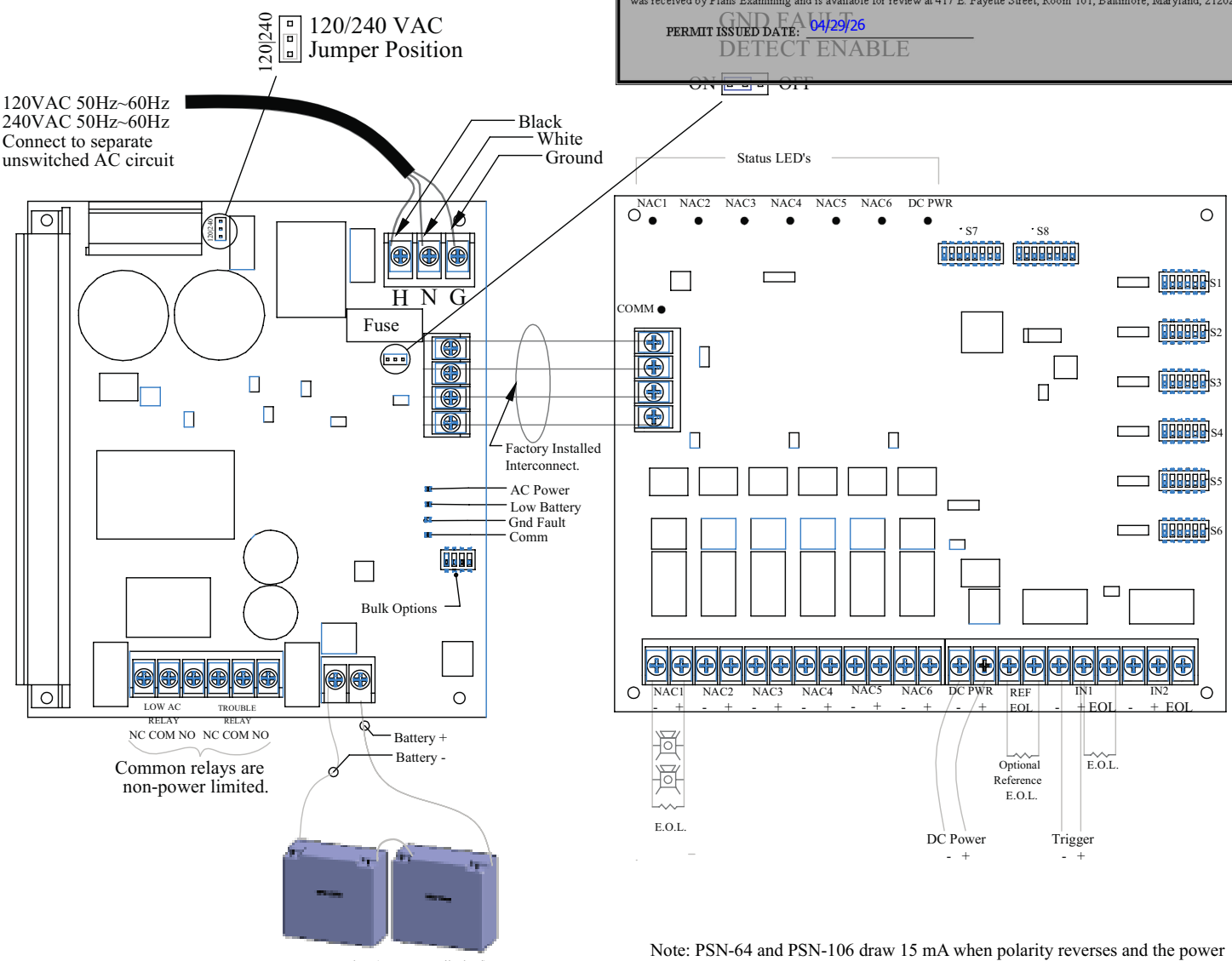

Battery connection (non-power limited).
Use two (2) 12V batteries connected in series.

Note: PSN-64 and PSN-106 draw 15 mA when polarity reverses and the power supply is triggered. There is no current draw in Standby Mode.

Ordering Information

Model	Description	Stock No.
PSN-106	10 A Power Supply, 6 NAC Circuits, Red Enclosure	3006437
PSN-106B	10 A Power Supply, 6 NAC Circuits, Black Enclosure	3006446
PSN-64	6 A Power Supply, 4 NAC Circuits, Red Enclosure	3006436

POTTER
The Symbol of Protection

City of Baltimore
APPROVED PERMIT SET

The Department of Housing and Community Development's Permits and Code Enforcement division has completed a review of this document for code compliance

PLAN NUMBER: BCCM-26-000642

A "Signature Ready Set" with seals and signatures of the professional responsible for the preparation and content of this document was received by Plans Examining and is available for review at 417 E. Fayette Street, Room 101, Baltimore, Maryland, 21202.

PERMIT ISSUED DATE: 04/29/26

Engineering Specifications

The contractor shall supply and install the Potter PSN power supply. The power supply shall operate on either 120 or 240 VAC input. The panel shall be capable of continuous load power without any degradation to the main supply or the distribution board. The cabinet shall be capable of housing up to 18AH batteries and the panel shall be capable of charging up to 55 AH batteries in an external cabinet.

The panel shall have dip switches for simplistic configuration of the system and LEDs to provide visual indication to the installer of the status of the system. The dip switches shall allow for AC power delay selection, Class A/B operation per output, Door Holder Power options, constant auxiliary power, trigger input type, ANSI Code 3 Temporal Code, Pass Thru (input tracking), AMSECO® sync, Gentex® Sync, System Sensor® Sync or Wheelock® sync. The LEDs shall provide indication of communication between the power supply and distribution circuit assemblies. The LEDs shall have distinct flash patterns to provide further indication of the troubles present. The panel shall have selectable Trouble Memory to provide the installer an indication that a past trouble existed on a circuit for diagnostic purposes.

Each output of the power supply shall be capable of 3 amps of continuous power without degradation overtime. The power supply shall provide for multiple circuits of strobe appliances. The power supply shall synchronize the flashes of any of the above listed strobe appliances on a per circuit basis. Up to four different strobe circuits may be connected and all the strobes shall flash in unison as required by UL 864. In addition to this Quadrasync feature, the panel shall allow any of the four above mentioned sync patterns as an input and pass this signal through and synchronize the outputs to match the input flash pattern.

City of Baltimore

APPROVED PERMIT SET

The Department of Housing and Community Development's Permits and Code Enforcement division has completed a review of this document for code compliance

PLAN NUMBER: BCCM-26-000642

A "Signature Ready Set" with seals and signatures of the professional responsible for the preparation and content of this document was received by Plans Examining and is available for review at 417 E. Fayette Street, Room 101, Baltimore, Maryland, 21202.

PERMIT ISSUED DATE: 04/29/26

POTTER
The Symbol of Protection

City of Baltimore
APPROVED PERMIT SET
The Department of Housing and Community Development's Permits and Code Enforcement division has completed a review of this document for code compliance
PLAN NUMBER: BCCM-26-000642
A "Signature Ready Set" with seals and signatures of the professional responsible for the preparation and content of this document was received by Plans Examining and is available for review at 417 E. Fayette Street, Room 101, Baltimore, Maryland, 21202.
PERMIT ISSUED DATE: 04/29/26

Micro Input Module

Features

- One Class B contact monitoring input
- Small size allows mounting in most electrical boxes
- SLC Class A, Class X & Class B
- 6" Pigtail wiring connections
- Product includes a 5 year warranty

Description

The PAD100-MIM is used to monitor the status of an initiating device(s) that contain a normally open set of dry contacts. The module is enclosed in a plastic case to protect against inadvertent shorts and ground faults. The case can be mounted using a single screw. The PAD100-MIM has a status indicator LED to indicate communication and alarm condition. In normal condition, the LED flashes when the device is being polled by the control panel. When the input is activated, the LED will flash at a fast rate.

Application

The micro input module (PAD100-MIM) is compatible with Potter's IPA and AFC/ARC series addressable fire alarm control panels. Generally the PAD100-MIM is used to monitor pull stations and other devices where the module is installed in an electrical box or enclosure behind the device being monitored.

Technical Specifications

Operating Voltage	24.0V
Max SLC Standby Current	200µA
Max SLC Alarm Current	200µA
IDC Input Circuit Wiring	Class B
Max Wiring Resistance of IDC	100 Ω
Max Wiring Capacitance of IDC	1µF
EOL Resistor	5.1K Ω
Operating Temperature Range	32 to 120ºF (0 to 49ºC)
Operating Humidity Range	0 to 93% (non-condensing)
Max no. of Module Per Loop	127 units
Dimensions	1.75" (44.5mm)L × 1.36" (34.5mm)W× .43" (11mm)D
Mounting Options	2-1/2" (64mm) deep single-gang box
Shipping Weight	0.3 lbs

City of Baltimore
APPROVED PERMIT SET
The Department of Housing and Community Development's Permits and Code Enforcement division has completed a review of this document for code compliance
PLAN NUMBER: BCCM-26-000642
A "Signature Ready Set" with seals and signatures of the professional responsible for the preparation and content of this document was received by Plans Examining and is available for review at 417 E. Fayette Street, Room 101, Baltimore, Maryland, 21202.
PERMIT ISSUED DATE: 04/29/26

Setting the Address

Each addressable SLC device must be assigned an address. The address is set using the DIP switch located on the front of the PAD100-MIM. Before connecting a device to the SLC loop, take the following precautions to prevent potential damage to the panel or device:

1. Power to the device is removed.
2. Field wiring is correctly installed.
3. Field wiring has no open or short circuits.

Wiring Diagram

Fig 1

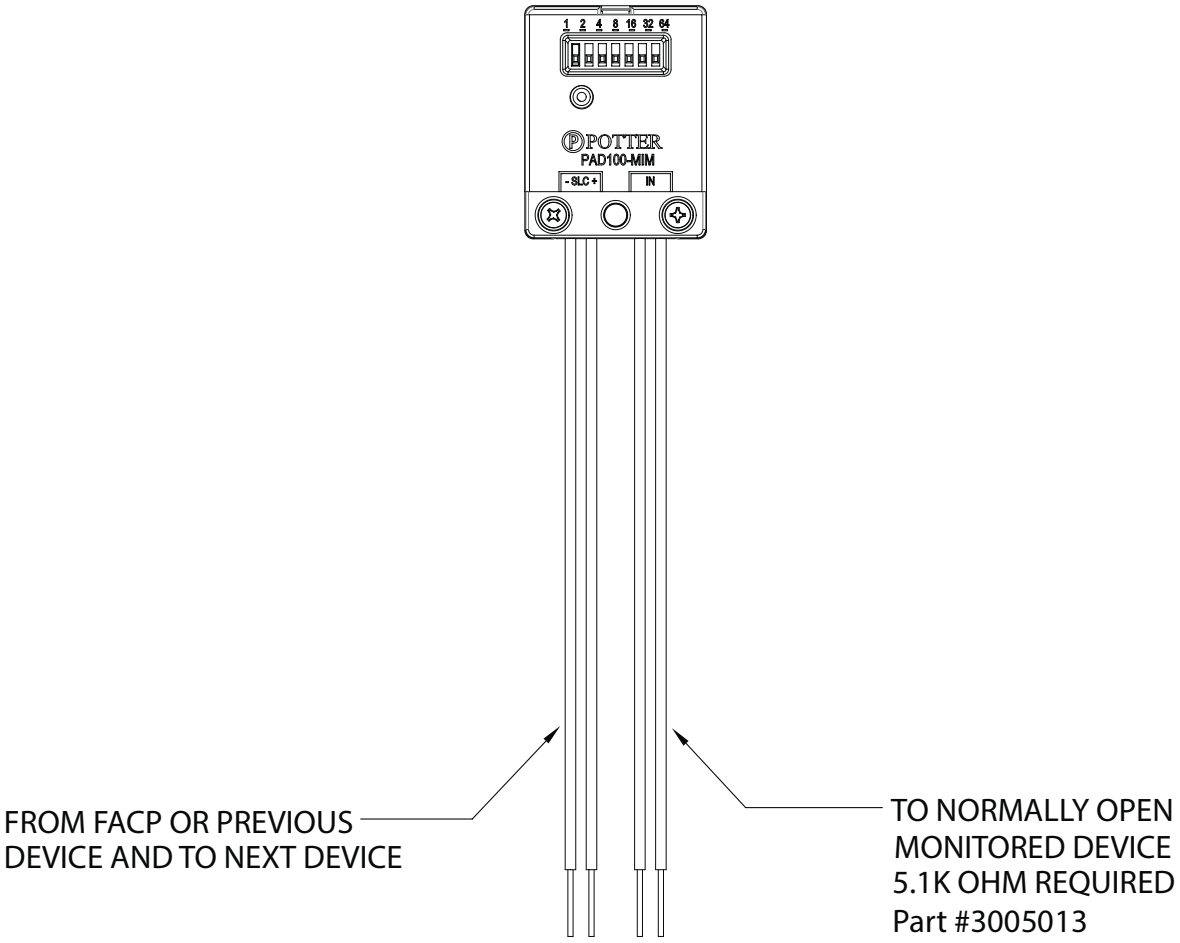

Ordering Information

Model	Description	Stock No.
PAD100-MIM	Micro Input Module	3992700

POTTER
The Symbol of Protection

PAD100-PSSA/PSDA
Addressable Pull Station
Single/Dual Action

City of Baltimore
APPROVED PERMIT SET
The Department of Housing and Community Development's Permits and Code Enforcement division has completed a review of this document for code compliance
PLAN NUMBER: BCCM-26-000642
A "Signature Ready Set" with seals and signatures of the professional responsible for the preparation and content of this document was received by Plans Examining and is available for review at 417 E. Fayette Street, Room 101, Baltimore, Maryland, 21202.
PERMIT ISSUED DATE: 04/29/26

Features

- Single or Dual Action versions
- Durable die-cast construction
- Reset key matches the fire alarm control panels
- Compatible with IPA Series panels
- SLC Class A, Class X & Class B
- Product includes a 5 year warranty

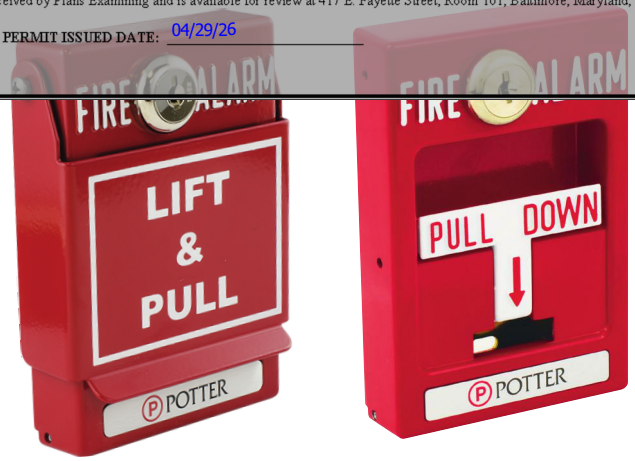

Description

The PAD100-PSSA (Single Action) is activated by simply pulling the white "T" bar handle down. The PAD100-PSDA (Dual Action) is activated by lifting the front cover and then pulling the white "T" bar handle down. Once activated, the "T" bar cannot be reset without opening the front cover. Opening the front cover will also activate the pull station. To reset the PAD100-PS Series, use the Potter WS-93 key to unlock and open the front cover. Once the cover is open, push the "T" bar back into the normal position and re-secure the front cover.

Application

The PAD100-PSSA/PSDA is compatible with Potter's IPA and AFC/ARC series addressable fire alarm control panels. It is a non-coded addressable pull station available in either a single or dual action model and installs on a single gang box or surface mounts using the P32-BB or P32-DBB (deep) back box.

Technical Specifications

Operating Voltage	24.0 VDC
Max SLC Standby Current	200uA
Max SLC Alarm Current	200uA
Environmental Limitations	32°F - 120°F (0° - 49°C) Indoor Only
Dimensions	4.75" H x 3.25" W x 1.75" D
Relative Humidity Range	0 - 93% (non-condensing)
Mounting Options	Single gang box or Potter P32-BB/DBB
Shipping Weight	APS-SA - 1.22 lbs. APS-DA - 1.46 lbs.

POTTER
The Symbol of Protection

City of Baltimore
APPROVED PERMIT SET
The Department of Housing and Community Development's Permits and Code Enforcement division has completed a review of this document for code compliance

PLAN NUMBER: BCCM-26-000642

A "Signature Ready Set" with seals and signatures of the professional responsible for the preparation and content of this document was received by Plans Examining and is available for review at 417 E. Fayette Street, Room 101, Baltimore, Maryland, 21202.

PERMIT ISSUED DATE: 04/29/26

Notification Appliance Circuit

Features

- Monitored output module that provides an additional supervised output
- Can be used as either a NAC or Releasing Output
- NAC can be wired Class A or Class B
- Monitors presence of 24 VDC Aux Power
- SLC Class A, Class X & Class B
- Mounts in a standard 4" or double gang box
- Wiring terminals accessible when mounted in box
- All wiring terminals accept 22 to 12 AWG
- Product includes a 5 year warranty

Description

The PAD100-NAC module uses one (1) address on an SLC Loop. The module provides a programmable source of power to supervise and control one (1) Class B or Class A Notification Appliance or one (1) Class B Releasing Circuit. The module requires and supervises a 24 VDC auxiliary power connection. The PAD100-NAC includes one red LED to indicate the module's status. In normal condition, the LED flashes when the device is being polled by the control panel.

Application

The PAD100-NAC is compatible with Potter's IPA and AFC/ARC series addressable fire alarm control panels. The PAD100-NAC is a monitored Notification Appliance Circuit that wires to the SLC loop to provide an additional notification circuit. When used with a Potter addressable releasing panel, the PAD100-NAC can provide an additional releasing circuit.

Setting the Address

Each addressable SLC device must be assigned an address. The address is set using the DIP switches on the PAD100-NAC module.

Before connecting a device to the SLC loop, take the following precautions to prevent potential damage to the panel or device:

1. Power to the device is removed.
2. Field wiring is correctly installed.
3. Field wiring has no open or short circuits.

Technical Specifications

Operating Voltage	24.0V
Max SLC Standby Current	200µA
Max SLC Alarm Current	200µA
Aux Power Required	16-33 VDC
Output Ratings	24 VDC, 2A
EOL Resistor	5.1K Ω
EOL Resistor Diode	Stock #3005012 Releasing Applications (Not Included)
Operating Temperature Range	32 to 120ºF (0 to 49ºC)
Operating Humidity Range	0 to 93% (non-condensing)
Max no. of Module Per Loop	127 units
Dimensions	4.17" (106mm)L × 4.17" (106mm)W × 1.14" (29mm)D
Mounting Options	Standard 4" Square or Double Gang Box
Shipping Weight	0.6 lbs

POTTER
The Symbol of Protection

City of Baltimore
APPROVED PERMIT SET
The Department of Housing and Community Development's Permits and Code Enforcement division has completed a review of this document for code compliance
PLAN NUMBER: BCCM-26-000642
A "Signature Ready Set" with seals and signatures of the professional responsible for the preparation and content of this document was received by Plans Examining and is available for review at 417 E. Fayette Street, Room 101, Baltimore, Maryland, 21202.
PERMIT ISSUED DATE: 04/29/26

Notification Appliance Circuit

Installation Using Compatible Electrical Box

Fig 1

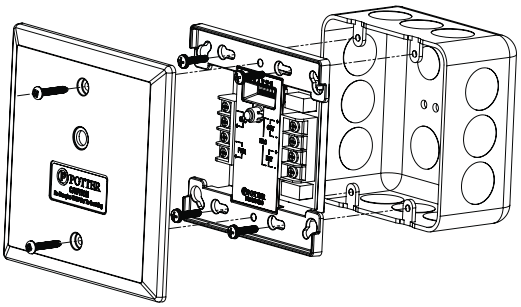

Wiring Diagrams

Output Connected to a Notification Appliance Circuit

Typical Class B Wiring Diagram
Fig 2

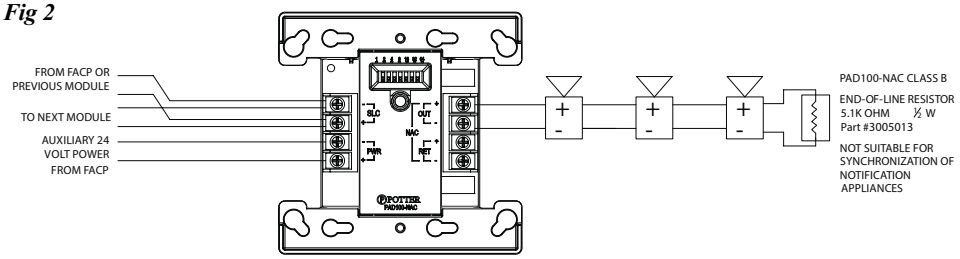

Typical Class A Wiring Diagram
Fig 3

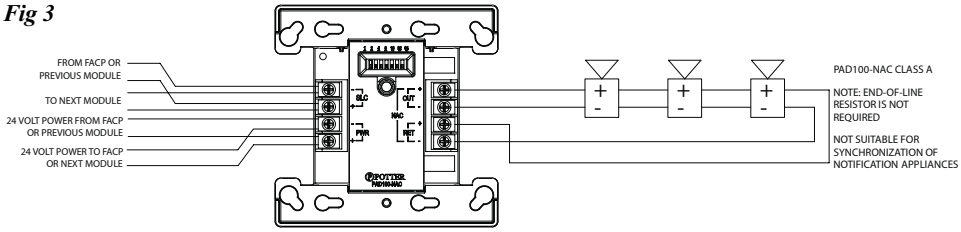

Releasing Application
Fig 4

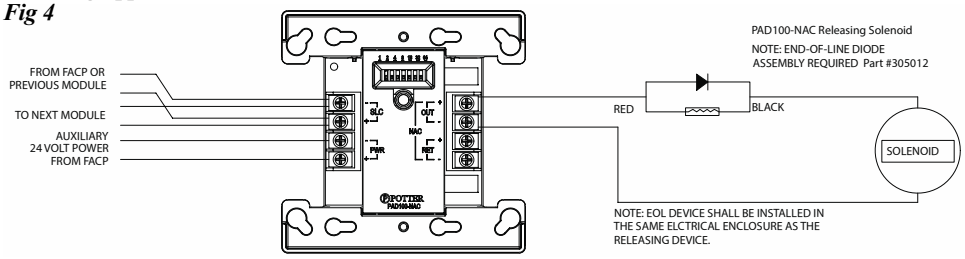

NOTICE

It is possible that the internal relay in the PAD100-NAC may be shipped in the non-normal / activated state. To ensure that the internal relay is set to the normal state, connect the module to the SLC loop and reset the control panel before terminating the wiring to the modules output.

Ordering Information

Model	Description	Stock No.
PAD100-NAC	Notification Appliance Circuit	3992707

POTTER
The Symbol of Protection

City of Baltimore
APPROVED PERMIT SET
The Department of Housing and Community Development's Permits and Code Enforcement division has completed a review of this document for code compliance
PLAN NUMBER: BCCM-26-000642
A "Signature Ready Set" with seals and signatures of the professional responsible for the preparation and content of this document was received by Plans Examining and is available for review at 417 E. Fayette Street, Room 101, Baltimore, Maryland, 21202.
PERMIT ISSUED DATE: 04/29/26

PAD300-6DB
4"/6" Detector Base

Features

- Terminals marked with polarity to assist with installation
- Duplicate Terminals for In-and-out SLC Wiring
- Terminals accept 22 to 12 AWG wire sizes
- Installs on Single Gang, Double Gang, Octagon or 4" Square Box
- Locking tab prevents unauthorized detector removal
- Product includes 5-year warranty
- 6" mounting base comes with trim plate cover

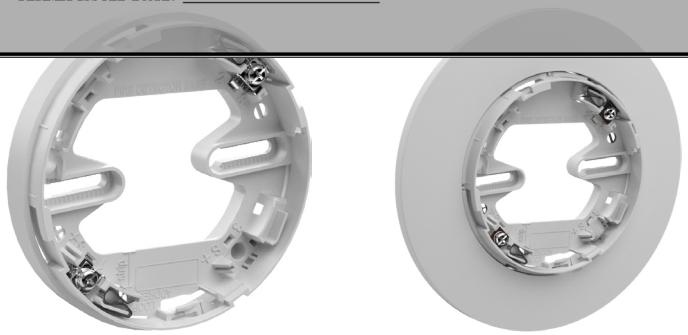

Application

The Potter PAD300-6DB and PAD300-4DB detector bases are used to install PAD300 series detectors. The PAD300-6DB will mount on a single gang, double gang, octagon, 4" square, 50mm, 60mm, and 70mm electrical box.

Description

The PAD300-6DB and PAD300-4DB are low-profile, surface-mount bases used with Potter's addressable detectors. The base uses screw clamp terminals that accept wire ranging from 22 to 12 AWG. When installed on recessed electrical boxes, the PAD300-6DB is wide enough to completely cover the back box and the immediate surrounding area. The base is equipped with a locking tab to deter unauthorized removal of the attached detector.

Technical Specifications

Installation Temp Range	32°F to 150°F (0°C to 66°C)
Operating Humidity Range	0% to 93% (Non-condensing)
Dimension	PAD300-4DB: 3.93 in / 100 mm PAD300-6DB: 6.3 in / 160 mm
Weight	PAD300-4DB: 1.34 oz / 38 g PAD300-6DB: 3.03 oz / 86 g
Height	0.76 in / 20 mm
Acceptable Wire Gauge	22 to 12AWG
Mounting Options	• Single Gang • Double Gang • 3-1/2" Octagon Box • 4" Octagon Box • 4" Square with Plaster Ring • 50mm c/c Box • 60mm c/c Box • 70mm c/c Box

POTTER
The Symbol of Protection

City of Baltimore
APPROVED PERMIT SET
The Department of Housing and Community Development's Permits and Code Enforcement division has completed a review of this document for code compliance
PLAN NUMBER: BCCM-26-000642
A "Signature Ready Set" with seals and signatures of the professional responsible for the preparation and content of this document was received by Plans Examining and is available for review at 417 E. Fayette Street, Room 101, Baltimore, Maryland, 21202.
PERMIT ISSUED DATE: 04/29/26

Locking Feature

The PAD300-6DB and PAD300-4DB include a locking feature that prevents removal of the detector without using a tool.

1. To enable this feature, break off the locking tab (See Figure 1), and then install the detector.

Fig. 1

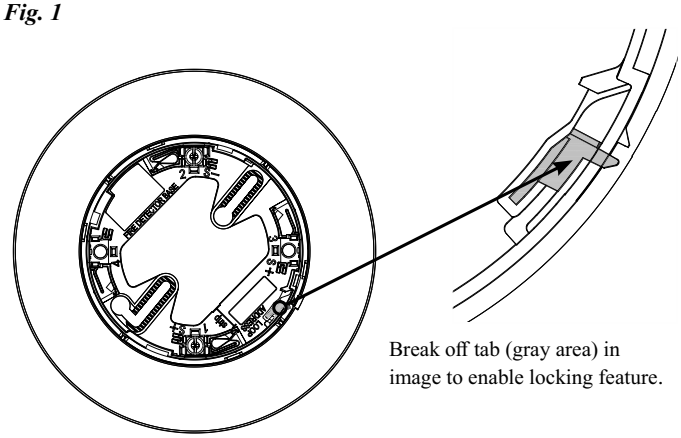

2. To remove the detector from the base when the locking feature has been enabled, insert a small screwdriver into the slot on the base to push the plastic tab while simultaneously turning the detector head counter-clockwise.

Fig. 2

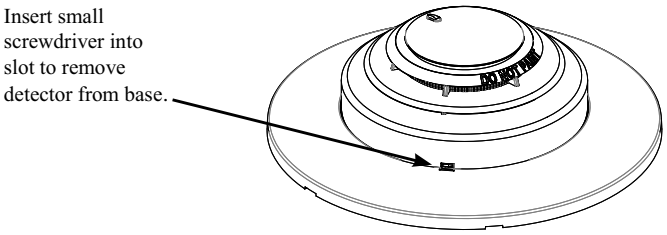

4"/6" Detector Base Wiring Diagrams

Fig. 3

1) Class B Wiring:

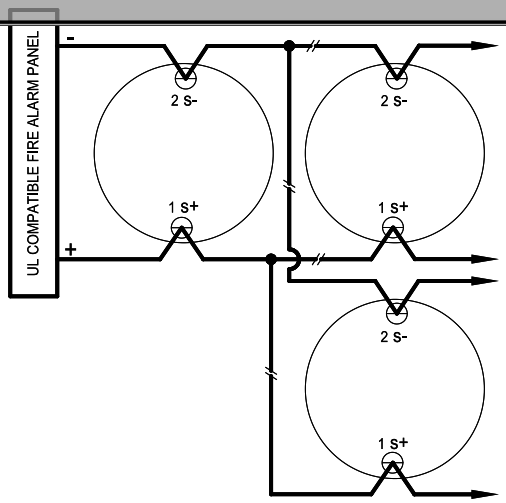

2) Class A Wiring:

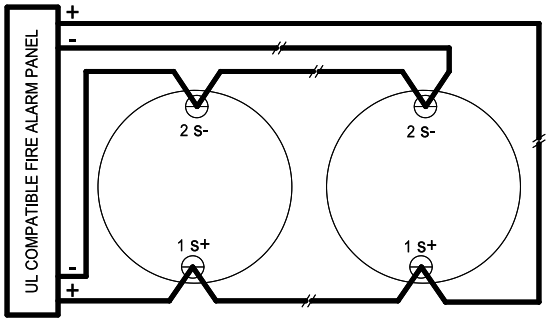

3) Class X Wiring:

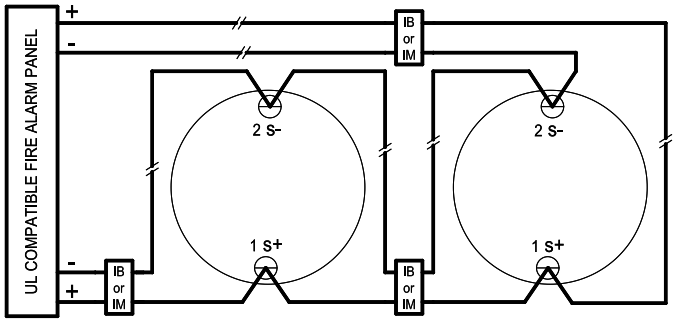

Ordering Information

Model	Description	Stock No.
PAD300-4DB	4" Detector Base	3992781
PAD300-6DB	6" Detector Base	3992782

POTTER
The Symbol of Protection

City of Baltimore
APPROVED PERMIT SET
The Department of Housing and Community Development's Permits and Code Enforcement division has completed a review of this document for code compliance
PLAN NUMBER: BCCM-26-000642
A "Signature Ready Set" with seals and signatures of the professional responsible for the preparation and content of this document was received by Plans Examining and is available for review at 417 E. Fayette Street, Room 101, Baltimore, Maryland, 21202.
PERMIT ISSUED DATE: 04/29/26

Photoelectric Smoke Detector

Features

- Low profile, less than 2 inches with the base
- Wide selectable sensitivity range of 1.1 to 3.5%/foot
- Detector communicates sensitivity to control panel
- UL listed smoke calibration and sensitivity
- Optional locking tab to prevent unwanted removal
- Simple DIP switch address setting, no programming tool required
- Magnetic test switch
- LED alarm indicator
- Product includes 5-year warranty
- UUKL Listed for Smoke Control
- UL268 7th edition compliant

Description

The Photoelectric Smoke Detector is a listed Analog Addressable smoke detector compatible with fire alarm control panels that utilize the Potter Addressable Device (PAD) protocol. The PAD300-PD is a low profile smoke detector with a wide sensitivity range. The detector and base are made of a durable plastic in an off-white color to blend in with the ceiling.

The PAD300-PD has a sensitivity range of 1.1 to 3.5 % per foot and is UL listed. The PAD300-PD features drift compensation and has built in dirty detector warning as well. The PAD300-PD and the control panel communicate over a proven and robust digital communication path and the system analyzes the information at the particular device. The total polling speed is less than five (5) seconds, well under the UL requirements.

The detector is compatible with any of the PAD300 series detector bases and simply twists on. The PAD300-PD is addressed using DIP switches in the rear of the detector and can be easily programmed in the field without special tools.

Setting the Address

Each addressable device on the SLC loop must have a unique address from 1 to 127 to function properly. The address is set using DIP switches.

Before connecting a device to the SLC loop, take the following precautions to prevent potential damage to SLC or device. Verify the following:

1. Power to the device is removed.
2. Field wiring is correctly installed.
3. Field wiring has no open or short circuits.

Technical Specifications

Operating Voltage	24 VDC
Detector Current Draw	300 µA
Alarm Indicator	1 LED
Alarm Set-point Range	1.1 to 3.5%/ft (3.6 to 11%/m)
Installation Temperature Range	32 to 120 ° F (0 to 49 ° C)
Operating Relative Humidity range	0% to 93% (Non-condensing)
Start-up Time	Max. 1 sec.
Maximum Number of Addresses Per Loop	127
Maximum Number of Lighted Indicators in Alarm Per Loop	30
Color	Eggshell White
Weight (without base)	91g (3.2oz)
Dimensions (without base)	Height: 1.42 in (36mm) Diameter: 3.93 in (100 mm)

POTTER
The Symbol of Protection

City of Baltimore
APPROVED PERMIT SET
The Department of Housing and Community Development's Permits and Code Enforcement division has completed a review of this document for code compliance
PLAN NUMBER: BCCM-26-000642
A "Signature Ready Set" with seals and signatures of the professional responsible for the preparation and content of this document was received by Plans Examining and is available for review at 417 E. Fayette Street, Room 101, Baltimore, Maryland, 21202.
PERMIT ISSUED DATE: 04/29/26

Air Velocity Ratings

The PAD300-PD has an Open Area of Protection air velocity rating of 0 to 300 feet per minute.

The system has a maximum of 30 LEDs that can be turned on simultaneously. If the system already has 30 LEDs on, the PAD300-PD will operate even though the LED may not illuminate.

Operation

The PAD300-PD is an analog addressable detector that uses one address on the Signaling Line Circuit (SLC) of a compatible fire alarm control panel. The unit communicates with the control panel as it is polled. The LEDs flash every time the unit is polled and they will flash at a fast rate if the unit is in an active status. The polling LED can be turned off if desired for less conspicuous operation.

The PAD300-PD with the PAD300-4DB or PAD300-6DB has a low profile of less than two (2) inches to blend into the surrounding environment. The detector includes an insect screen to prevent foreign objects from reaching the chamber and can be cleaned to restore operation of a dirty detector.

Detector Sensitivity

The PAD300-PD and the compatible control panel work in tandem to keep the sensitivity consistent. As the detector is installed over time, the detector compensates for the dirt in the unit until it is out of range. At that time, the panel will indicate a dirty detector. The detector will then have to be cleaned or replaced.

The PAD300-PD can be programmed to provide a maintenance alert prior to reaching the dirty detector level which will allow for intervention prior to the detector going into trouble. This allows for detector replacement or cleaning prior to a nuisance trouble occurs.

NOTE: As required by NFPA, do not install the detectors until all construction is complete and the work area has been thoroughly cleaned. If the detectors have been installed in a construction environment, they should be cleaned or replaced before the system is placed into service.

Spacing

The PAD300-PD is UL listed with a recommended maximum spacing of 30 feet. Refer to NFPA 72 for specific information regarding detector spacing, placement and special applications.

Compatible Bases

All bases will mount on a single gang, 3-1/2" octagon, 3-1/2" square, double gang, 4" octagon, 4" square, 50mm c/c, 60mm c/c and 70mm c/c boxes.

Device	Description	Stock No.
PAD300-4DB	4" Detector Base	3992781
PAD300-6DB	6" Detector Base	3992782
PAD300-IB	6" base with an isolator module included	3992783
PAD300-RB	6" base with one Form-C relay contact. 2A @ 30VDC, 0.5A @ 125VAC	3992784
PAD300-SB	6" base with sounder module included. Sound pattern is provided from external source	3992785
PAD300-LFSB	6" base with 520Hz sounder module included. Sound pattern is provided from external source	3992786

Ordering Information

Model	Description	Stock No.
PAD300-PD	Photoelectric Smoke Detector	3992775

Technical Data **TD450157EN**

City of Baltimore
APPROVED PERMIT SET
The Department of Housing and Community Development's Permits and Code Enforcement division has completed a review of this document for code compliance
PLAN NUMBER: BCCM-26-000642
A "Signature Ready Set" with seals and signatures of the professional responsible for the preparation and content of this document was received by Plans Examining and is available for review at 417 E. Fayette Street, Room 101, Baltimore, Maryland, 21202.
PERMIT ISSUED DATE: 04/29/26

Eluxa horns, horn strobes, & strobes clear and amber lens

ELHN, ELHS, ELST
ELHNC, ELHSC, ELSTC

Description

The Wheelock Eluxa horns, horn strobes, and strobes by Eaton feature an advanced power saving LED technology with a full range of low and high candela settings for indoor wall and ceiling-mount applications. Designed in sleek, modern enclosures, Eluxa's aesthetically pleasing low profile will blend with the building's interior décor.

High efficiency, LED technology

Eaton's high energy efficient technology leads the industry in lowest current draw for a combined high and low candela device, which reduces overall power consumption. As the first notification appliances in the industry to utilize LED as the light source, this breakthrough optical design, resulting in best-in-class efficiency, enables material and system cost savings, allowing for a greater number of appliances on the notification appliance circuit and fewer power supplies. This reduces installation and operating costs. All clear and amber strobe models feature six candela settings: 15, 30, 75, 110, 135, 185 cd on wall models and 15, 30, 75, 110, 150,177 cd on ceiling models.

Low profile design and rich feature set

With the industry's smallest footprint, the Eluxa horns, horn strobes, and strobes are aesthetically pleasing to building owners as the low profile design does not detract from the interior decor. Eluxa is feature rich with 6 candela settings and 3 horn patterns (Continuous, T3, T3/T4) in 1 device, pre-wire/pre-test via mounting plate with hinged feature for ease-of-installation, single-gang design (wall models), and no tools needed for setting changes. The ELST strobe, ELHS horn strobe, and the ELHN horn are for 24V operation. ELHN is suitable for 12V applications.

Approvals and synchronization

Eaton's Eluxa strobes meet the 20 millisecond light pulse duration requirements of the 2016 edition of NFPA 72. By meeting this latest requirement, xenon and LED devices can now be in the same field of view.

The Eluxa notification appliances are listed under UL Standards 1971, 1638, and 464 and under CAN/ULC-S525 and CAN/ULC-S526. The appliances are Restriction of Hazardous Substances (RoHS) compliant and contain no mercury or other hazardous substances.

In addition, the Eluxa product line has been UL/ULC listed as compatible with all Fire Alarm Control Panels (FACP) and accessories that have been determined to be compatible with Exceder LED3 and Wheelock RSS strobe-based products including the RSS, CH, E, EH, ET, ST, HS, MT, S8, SA, STH and Z Series. The listing also includes the ability to install the Eluxa strobes in the same notification zone and field of view with any Wheelock RSS and Exceder LED3 strobe models.

EATON
Powering Business Worldwide

City of Baltimore
APPROVED PERMIT SET
The Department of Housing and Community Development's Permits and Code Enforcement division has completed a review of this document for code compliance
PLAN NUMBER: BCCM-26-000642
A "Signature Ready Set" with seals and signatures of the professional responsible for the preparation and content of this document was received by Plans Examining and is available for review at 417 E. Fayette Street, Room 101, Baltimore, Maryland, 21202.
PERMIT ISSUED DATE: 04/29/26

Features

- Energy efficient
  - LED technology provides industry's lowest current draw
  - Fewer power supplies required, smaller wire gage, reduced wire runs
- Low-profile design
  - One of the smallest, most compact single-gang designs
  - Sleek, modern aesthetics with no visible mounting screws
- Special lettering available
- 6 Field selectable settings in 1 device
  - Wall: 15, 30, 75, 110, 135, 185 cd
  - Ceiling: 15, 30, 75, 110, 150, 177 cd
- 3 horn patterns
  - Continuous, T3, and T3/T4; Fire and CO signaling in 1 device
- Sound pressure (Anechoic) dBA
  - Low 78, High 91 (for Continuous, T3, and T4)
- Easy-to-install
  - Mounting plate included with all models: Convenient capture hinge allows installers to easily hold the device while fastening the single-mount screw in place.
  - Pre-wire/pre-test capability to check for wiring and ground faults prior to appliance installation
  - Finger slide switches--No tools needed for setting changes
  - IN/OUT screw terminals using #12 to #18 AWG wires
  - Mounting options include ELSBB, any single-gang backbox and to 4" square with adapter kit for wall models and LSPKBB-C backboxes, 4" square, 1 1/2" or 2 1/8"deep and 4" Octagonal, 1 ½" or 2 1/8"deep for ceiling models
- Strobe synchronization
  - Meet synchronizing standards with Wheelock's DSM Sync Modules, PS Power Supplies or SAFEPATH products
  - Ability to mix xenon and LED strobes in the same field of view
- Compliance
  - NFPA 72 2016 - 20 ms flash duration requirements
  - UL 1971, UL 1638, UL 464, ULC-S525, ULC-S526
  - California State Fire Marshal (CSFM)
  - RoHS
  - FCC Part 15, ICES

Note: Please read these specifications and associated installation instructions, before using, specifying, or installing this product. Visit Eaton.com/Lifesafetynotification for current installation instructions.

General Notes

- Strobes are designed to flash at 1 flash per second minimum over their "Regulated Voltage Range." Note that NFPA-72 specifies a flash rate of 1 to 2 flashes per second and ADA Guidelines specify a flash rate of 1 to 3 flashes per second.
- All candela ratings represent minimum effective strobe intensity based on UL 1971.

Drawings

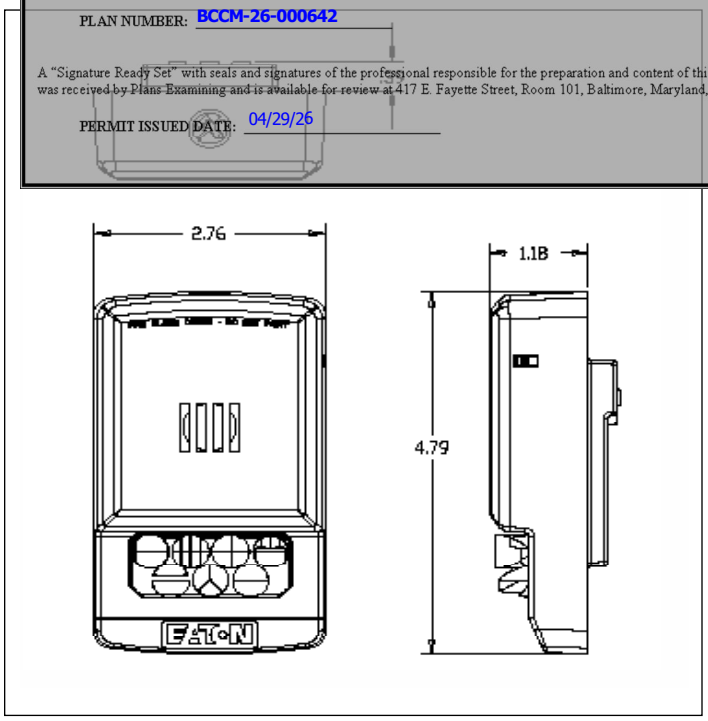

Figure 1. Wall, horn strobe

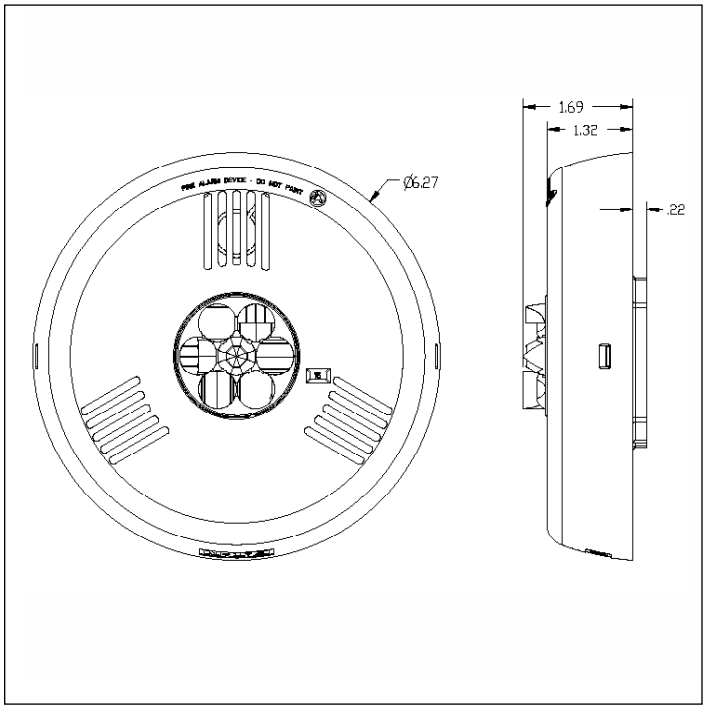

Figure 2. Ceiling, horn strobe

Table 1. Horn Current Ratings (AMPS)

Input	Horn Setting	Regulated 12V (8-17.5V)	Regulated 24V (16-33V)
ELHN	CONT, T3, T3/T4 (H)	0.025	0.028
	CONT, T3, T3/T4 (L)	0.020	0.021
ELHNC	CONT, T3, T3/T4 (H)	0.025	0.028
	CONT, T3, T3/T4 (L)	0.020	0.021

City of Baltimore
APPROVED PERMIT SET
The Department of Housing and Community Development's Permits and Code Enforcement division has completed a review of this document for code compliance
PLAN NUMBER: BCCM-26-000642
A "Signature Ready Set" with seals and signatures of the professional responsible for the preparation and content of this document was received by Plans Examining and is available for review at 417 E. Fayette Street, Room 101, Baltimore, Maryland, 21202.
PERMIT ISSUED DATE: 04/29/26

Table 2. Strobe Ratings

		UL/ULC Max Current [a]						
		24VDC						
Model	**Regulated Voltage Range VDC**	**15cd**	**30cd**	**75cd**	**110cd**	**135cd**	**150cd**	**177cd**	**185cd**
ELST	16.0-33.0	0.017	0.022	0.053	0.075	0.079	0.101		
ELSTC	16.0-33.0	0.017	0.023	0.053	0.075	0.079	0.101		

Table 3. Horn-Strobe, Current Ratings (AMPS at 24V)

		Strobe Candela Setting					
Model	**Horn Setting**	**15cd**	**30cd**	**75cd**	**110cd**	**135cd**	**185cd**
ELHS	CONT, T3, T3/T4 (H)	0.035	0.042	0.069	0.096	0.124	0.177
	CONT, T3, T3/T4 (L)	0.025	0.034	0.061	0.094	0.117	0.168
		15cd	**30dc**	**75cd**	**110cd**	**150cd**	**177cd**
ELHNC	CONT, T3, T3/T4 (H)	0.035	0.042	0.069	0.096	0.124	0.177
	CONT, T3, T3/T4 (L)	0.025	0.034	0.061	0.094	0.117	0.168

Table 4. Specification & Ordering Information

Model	Mounting	Strobe Candela	Strobe Color	Red	White	Lettering	Sync w/ DSM or Wheelock Power Supplies
Horn strobes							
ELHSR	Wall	15/30/75/110/135/185	Clear	X		FIRE	X
ELHSW	Wall	15/30/75/110/135/185	Clear		X	FIRE	X
ELHSR-A	Wall	15/30/75/110/135/185	Clear	X		AGENT	X
ELHSR-N	Wall	15/30/75/110/135/185	Clear	X		No Lettering	X
ELHSW-A	Wall	15/30/75/110/135/185	Clear		X	AGENT	X
ELHSW-AL	Wall	15/30/75/110/135/185	Clear		X	ALERT	X
ELHSW-N	Wall	15/30/75/110/135/185	Clear		X	No Lettering	X
ELHSW-EV	Wall	15/30/75/110/135/185	Clear		X	EVACUATE	X
ELHSRC	Ceiling	15/30/75/110/150/177	Clear	X		FIRE	X
ELHSWC	Ceiling	15/30/75/110/150/177	Clear		X	FIRE	X
ELHSR-NA	Wall	15/30/75/110/135/185	Amber	X		No lettering	x
ELHSRC-NA	Ceiling	15/30/75/110/150/177	Amber	X		No lettering	x
ELHSW-NA	Wall	15/30/75/110/135/185	Amber		X	No lettering	x
ELHSWC-NA	Ceiling	15/30/75/110/150/177	Amber		X	No lettering	x
Strobes							
ELSTR	Wall	15/30/75/110/135/185	Clear	X		FIRE	X
ELSTW	Wall	15/30/75/110/135/185	Clear		X	FIRE	X
ELSTR-A	Wall	15/30/75/110/135/185	Clear	X		AGENT	X
ELSTR-AL	Wall	15/30/75/110/135/185	Clear	X		ALERT	X
ELSTW-A	Wall	15/30/75/110/135/185	Clear		X	AGENT	X
ELSTW-AL	Wall	15/30/75/110/135/185	Clear		X	ALERT	X
ELSTW-N	Wall	15/30/75/110/135/185	Clear		X	No Lettering	X
ELSTR-N	Wall	15/30/75/110/135/185	Clear	X		No Lettering	X
ELSTW-EV	Wall	15/30/75/110/135/185	Clear		X	EVACUATE	X
ELSTRC	Ceiling	15/30/75/110/150/177	Clear	X		FIRE	X
ELSTWC	Ceiling	15/30/75/110/150/177	Clear		X	FIRE	X
ELSTRC-AL	Ceiling	15/30/75/110/150/177	Clear	X		ALERT	X
ELSTWC-AL	Ceiling	15/30/75/110/150/177	Clear		X	ALERT	X
ELSTWC-EV	Ceiling	15/30/75/110/150/177	Clear		X	EVACUATE	X
Strobe Amber Data							
ELSTW-NA	Wall	15/30/75/110/135/185	Amber		X	No lettering	X
ELSTWC-NA	Ceiling	15/30/75/110/150/177	Amber		X	No lettering	X
ELSTW-ALA	Wall	15/30/75/110/135/185	Amber		X	ALERT	X
ELSTWC-ALA	Ceiling	15/30/75/110/150/177	Amber		X	ALERT	X
ELSTR-NA	Wall	15/30/75/110/135/185	Amber	X		No lettering	X
ELSTRC-NA	Ceiling	15/30/75/110/150/177	Amber	X		No lettering	X
ELSTR-ALA	Wall	15/30/75/110/135/185	Amber	X		ALERT	X
ELSTRC-ALA	Ceiling	15/30/75/110/150/177	Amber	X		ALERT	X
Horns							
ELHNR	Wall			X		No Lettering	X
ELHNW	Wall				X	No Lettering	X
ELHNRC	Ceiling			X		No Lettering	X
ELHNWC	Ceiling				X	No Lettering	X
Accessories							
ELSBB-R	LED Backbox, wall			X			
ELSBB-W	LED Backbox, wall				X		
ESB-KIT-R	Trim Plate, wall			X			
ESB-KIT-W	Trim Plate, wall				X		
LSPKBB-CR	Backbox, ceiling			X			
LSPKBB-CW	Backbox, ceiling				X		

1. RMS current ratings are per UL maximum RMS method. UL max current rating is the maximum RMS current within the listed voltage range (16-33v for 24v units). for strobes the UL max current is usually at the minimum listed voltage (16v for 24v units). For audibles the max current is usually at the maximum listed voltage (33v for 24v units). For unfiltered FWR ratings, see installation instructions.
2. Regulated Voltage Range - VDC

Note: Due to continuous development of our products, specifications and offerings are subject to change without notice in accordance with Cooper Wheelock Inc., dba Eaton standard terms and conditions.

City of Baltimore
APPROVED PERMIT SET
The Department of Housing and Community Development's Permits and Code Enforcement division has completed a review of this document for code compliance
PLAN NUMBER: BCCM-26-000642
A "Signature Ready Set" with seals and signatures of the professional responsible for the preparation and content of this document was received by Plans Examining and is available for review at 417 E. Fayette Street, Room 101, Baltimore, Maryland, 21202.
PERMIT ISSUED DATE: 04/29/26

Table 5. Specifications

Physical	
Material	Red or white textured UV stabilized, colored impregnated engineered plastic. Exceeds 94V-0 UL flammability rating
Weight	Wall: 0.35 lbs; Ceiling: 0.55 lbs
Lens	Light Emitting Diode (LED) in a rugged Lexan lens
Dimensions	Wall: 4.79"H x 2.76" W x 1.18" D, Trimplate: 5.25" H x 4.5" W x 0.32" D; Ceiling: 6.27" Diameter x 1.69" D
Operating Temperature	Indoor: 32°F to 122°F (0°C to 50°C) and maximum humidity of 93%
Mounting & Wire Connections	
Mounting (indoor only)	Mounting plate included with all models. ELHS and ELST are for wall-mount applications only. ELHN can be used for wall and ceiling-mount applications. Wall mounting: Single-gang, ELSBB backboxes or to 4" square with adapter kit. ELHN can be used for wall and ceiling-mount applications. ELHSC and ELSTC are for ceiling mount applications only. The ELHNC can also be used for wall-mount applications. Ceiling mounting: LSPKBB-C backboxes or to 4" square, 1 1/2" or 2 1/8"and Octagonal, 1 ½" or 2 1/8"deep
Wire Connections	#12 through #18 AWG
Power & General	
Operating voltage	12 VDC/VFWR: 8 - 17.5 VDC/VFWR; 24 VDC/VFWR: 16 - 33 VDC/VFWR (12 VDC ELHN/ELHNC models only)
Strobe Output Rating	UL 1971, UL 1638, ULC S526: Selectable 15, 30, 75, 110, 135, 185 candela output for wall models; Selectable 15, 30, 75, 110, 150, 177 candela output for ceiling models
Synchronization Models	Strobes can be synchronized with Wheelock's DSM Sync Modules, PS Power Supplies or SAFEPATH products, using Wheelock patented sync protocol

Architects and Engineers Specifications

The LED notification appliances shall be Wheelock® ELHS audible visual strobe appliances, ELST visual strobe appliances and ELHN audible appliances for wall and ceiling-mount applications with a low-profile design or approved equals. Special lettering, including AGENT, ALERT, EVACUATE, and no lettering, shall be available. The ELHS and ELST strobes shall be listed for UL Standard 1971 (Emergency Devices for the Hearing-Impaired) for Indoor Fire Protection Service and UL 1638 (Visible Signaling Devices. The ELHS and ELHN Audibles shall be UL Listed under Standard 464 (Fire Protective Signaling). All models shall meet the requirements of FCC Part 15 and ICES-003. All inputs shall be compatible with standard reverse polarity supervision of circuit wiring by a Fire Alarm Control Panel (FACP) with the ability to operate from 16 to 33 VDC/VFWR.

The ELHS audible strobe and ELST strobe appliances shall produce a flash rate of one (1) flash per second over the Regulated Voltage Range and shall incorporate a Light Emitting Diode (LED) as the light source with a rugged Lexan® lens. The appliances shall be of low current design. The LED strobe flash duration shall be 20 ms. Where Multi-Candela appliances are specified, the strobe intensity shall have 6 field selectable settings at 15, 30, 75, 110, 135 and 185 candela for wall mount applications and 15, 30, 75, 110, 150 and 177 for ceiling applications. The selector switch for selecting the candela shall be tamper resistant. Appliances with candela settings shall show the candela selection in a visible location at all times when installed.

The audible shall have a choice of three (3) horn patterns (high & low output): Continuous, T3, and T3/T4 for fire (T3) and CO (T4) signaling.

The ELHS audible strobe, ELST strobe, and ELHN audible shall include a hinged mounting plate. Mounting options shall include LED backboxes, single-gang backbox and to 4" square with adapter kit for wall-mount models and LED Ceiling backboxes, 4" square, 1 1/2" or 2 1/8"deep and 4" Octagonal, 1 ½" or 2 1/8"deep for ceiling models. Two wire appliance wiring shall be capable of directly connecting to the mounting base. Removal of an appliance shall result in a supervision fault condition by the Fire Alarm Control Panel (FACP). All notification appliances shall be backwards compatible.

The ELHS, ELHN and ELST wall models shall have a low profile measuring 4.79"H x 2.76"W x 1.18"D. The ELHSC, ELHNC and ELSTC ceiling models shall have a low profile measuring 6.27" Diameter with 1.69"D.

When synchronization is required, the appliance shall be compatible with Wheelock®'s DSM Sync Modules, PS Power Supplies, SAFEPATH products or other manufacturer's panels with built-in Wheelock® Patented Sync Protocol. The strobes shall not drift out of synchronization at any time during operation. If the sync protocol fails to operate, the strobe shall revert to a non-synchronized flash-rate and still maintain (1) flash per second over its Regulated Voltage Range. The appliance shall also be designed so that the audible signal may be silenced while maintaining strobe activation when used with Wheelock® patented sync protocol.

NFPA 72 2016, UL 1971, UL, 1638, UL 464 ULC-S525-16, ULC-S526-16, CSFM, FCC, RoHS, ICES

NEMA Member

WE ENCOURAGE AND SUPPORT NICET CERTIFICATION
3 YEAR WARRANTY

Eaton
1000 Eaton Boulevard
Cleveland, OH 44122
United States
Eaton.com

Life safety & mass notification solutions
273 Branchport Ave.
Long Branch, NJ 07740
Eaton.com/Lifesafetynotification

© 2025 Eaton
All Rights Reserved
Printed in USA
Publication No. TD450157EN
June 2025

Eaton is a registered trademark.

All other trademarks are property of their respective owners.

Powering Business Worldwide

DTK-HW Series

Parallel Connected Surge Protective Device

City of Baltimore
APPROVED PERMIT SET
The Department of Housing and Community Development's Permits and Code Enforcement division has completed a review of this document for code compliance
PLAN NUMBER: BCCM-26-000642
A "Signature Ready Set" with seals and signatures of the professional responsible for the preparation and content of this document was received by Plans Examining and is available for review at 417 E Fayette Street, Room 101, Baltimore, Maryland, 21202.
PERMIT ISSUED DATE: 04/29/26

DITEK's DTK-HW Series designed and manufactured to meet the standards of the life safety industry. These compact, parallel-mount SPD's are available for 120V, 240V and 120/240V systems; and are widely used to protect fire alarm panels and other dedicated branch circuit loads. Their small footprint enables installation in a variety of locations.

Product Features

- Approved for 20A circuit breakers
- NEMA 4X Weatherproof enclosure allows for use in harsh environments
- Diagnostic LED indicates ground presence, system power and SPD function
- Complies with ANSI/IEEE C62.41 and C62.45 Category B standards

Applications

- Fire Alarm Control Panels
- Equipment Panels
- Dedicated Branch Circuits
- Pumps, Motors and Lift Pump Stations

Accessories

- DIN Rail Mounting Kit – DTK-DRK

Dimensions

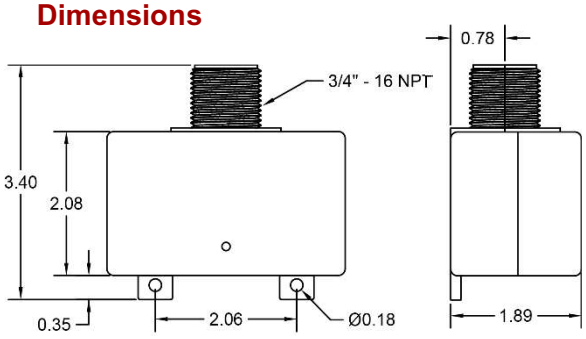

Technical Specifications

Part Number:	DTK-120HW	DTK-240HW	DTK-120/240HW
Service Voltage:	Single Φ (2W + G), 120VAC	Single Φ (2W + G), 240VAC	Split Φ (3W + G), 120/240VAC
MCOV:	150V	320V	150/320V
Protection Modes:	L-G, L-N, N-G	L-G, L-N, N-G	L-G, L-L, L-N, N-G
Voltage Protection Rating:	700V L-G 700V L-N 1,500V N-G	1,200V L-G, 1,200V L-N 2,000V N-G	700V L-G, L-N 1,500V L-L, 1,500V N-G
Surge Current Rating:	50,000A	50,000A	100,000A
SCCR:	10kA		
Nominal Discharge Current Rating (I_n):	10kA		

Mechanical Characteristics

Connection Method:	¾" NPT Parallel Wired
Housing:	NEMA 4X
Temperature Range:	-31°F - 176°F (-35°C - 80°C)
Maximum Humidity:	95% non-condensing
Dimensions:	3.5"L x 1.89"W x 3.4"H (88.9mm x 48.3mm x 86.4mm)
Weight:	0.55 lb. (0.25 kg)

Quality, Standards & Approval

Agency Approvals:	UL 1449 4th Edition, cUL
SPD Type:	Type 1 SPD
Warranty:	Ten Year Limited

Every precaution has been taken to ensure that this literature is accurate and complete. DITEK Corporation assumes no respons ibility and disclaims all liability for damages resulting from the use of this information or for any errors or omissions.

One DITEK Center 1720 Starkey Road - Largo, FL 33771
Phone: 1-800-753-2345 Direct: 727-812-5000
Technical Support: 1-888-472-6100
www.diteksurgeprotection.com

Doc. Number: SPS-100057-001 Rev 14 05/18
©2018 DITEK Corp.

ISO 9001 c UL us LISTED MADE IN U. S. A.

City of Baltimore

APPROVED PERMIT SET

The Department of Housing and Community Development's Permits and Code Enforcement division has completed a review of this document for code compliance

PLAN NUMBER: BCCM-26-000642

A "Signature Ready Set" with seals and signatures of the professional responsible for the preparation and content of this document was received by Plans Examining and is available for review at 417 E. Fayette Street, Room 101, Baltimore, Maryland, 21202.

PERMIT ISSUED DATE: 04/29/26