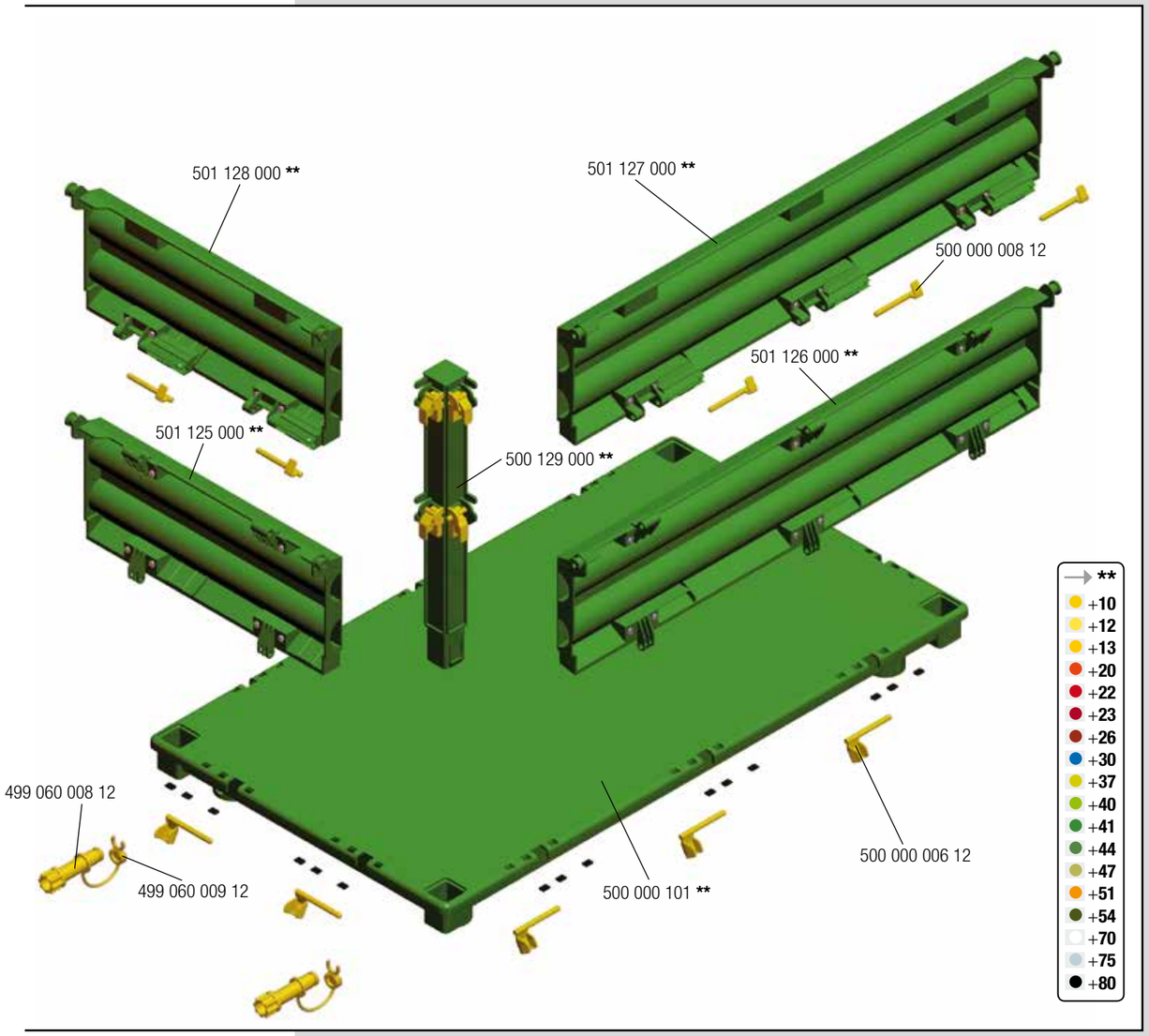

rollyMulti Trailer

rolly toys Kundendienst Deutschland:
Tel: +49 (0) 95 68 / 856-142
Fax: +49 (0) 95 68 / 856-183
e-mail: service@rollytoys.de

Alter/age 3 → 10

2019/01

501.000.800.00

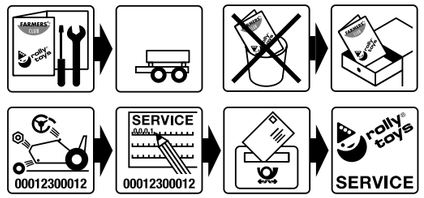

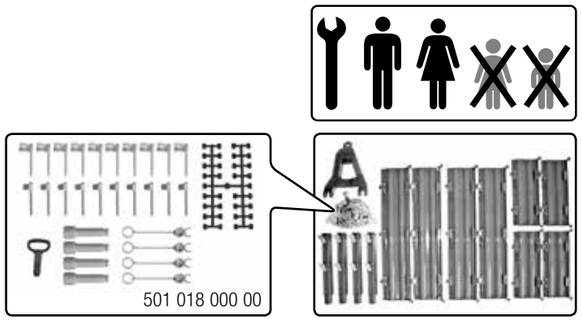

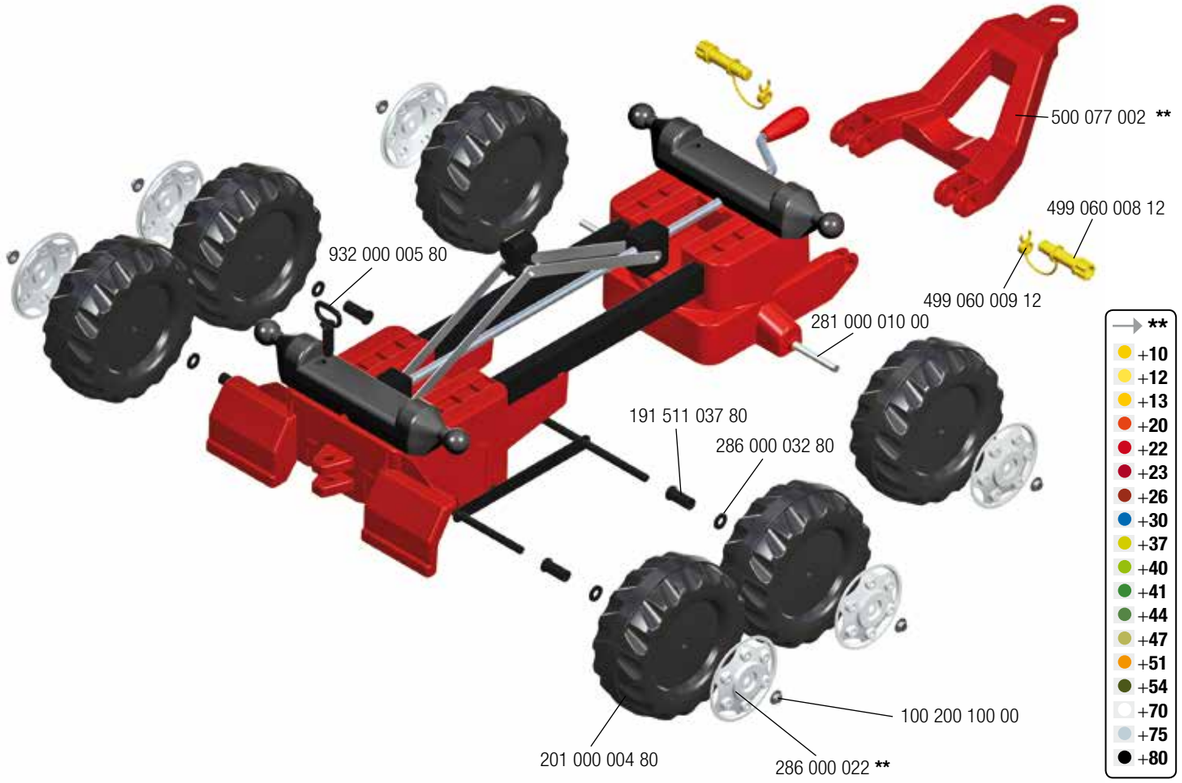

---NORTH & SOUTH AMERICA only---

180 days warranty

From the date of purchase + guaranteed spare part service

The warranty does not cover dammages caused by improper use or neglect

---

BG Предупреждение!
CZ Varování!
D Achtung!
DK Advarsel!
E Aviso!
EST Hoiatus!
F Attention!
FIN Varoitus!
GB Warning!
GR Πρ?ειδ?π?ίηση!
H Figyelmeztetés!
HR Pažnja!
I Avviso!
IRL Rabhchán!
LT Įspėjimas!
LV Uzmanību!
M Avviž!
MK Внимание!
N OBS!
NL Waarschuwing!
P Aviso!
PL Ostrożnie!
RO Avertisment!
RUS Внимание!
S Varning!
SK Varovanie!
SLO Opozorilo!
TR Dikkat!

0-3 A1

WARNING:

CHOKING HAZARD – Small parts.
Not for children under 3 years.

- CHOKING HAZARD - Small parts, Danger of being swallowed. Contains small parts in non assembled state. Must be assembled by adults.
- Toy is not suitable to carry children.
- If toy is defective stop using it, repairs may only be carried out by adults.
- Adult supervision required.
- Never use near steps, slopes, driveways, hills, roadways, alleys or swimming pool areas.
- Always wear shoes.
- Conforms to the requirements of ASTM Standard Consumer Safety Specification on Toy Safety, F 963.

CE

made in Germany

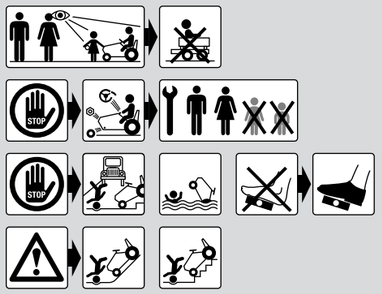

Franz Schneider GmbH & Co KG
P.O.Box 1460
D-96459 · Neustadt bei Coburg · Germany
Tel.: +49 (0) 95 68 / 856-0
Fax.: +49 (0) 95 68 / 856-190
www.rollytoys.com

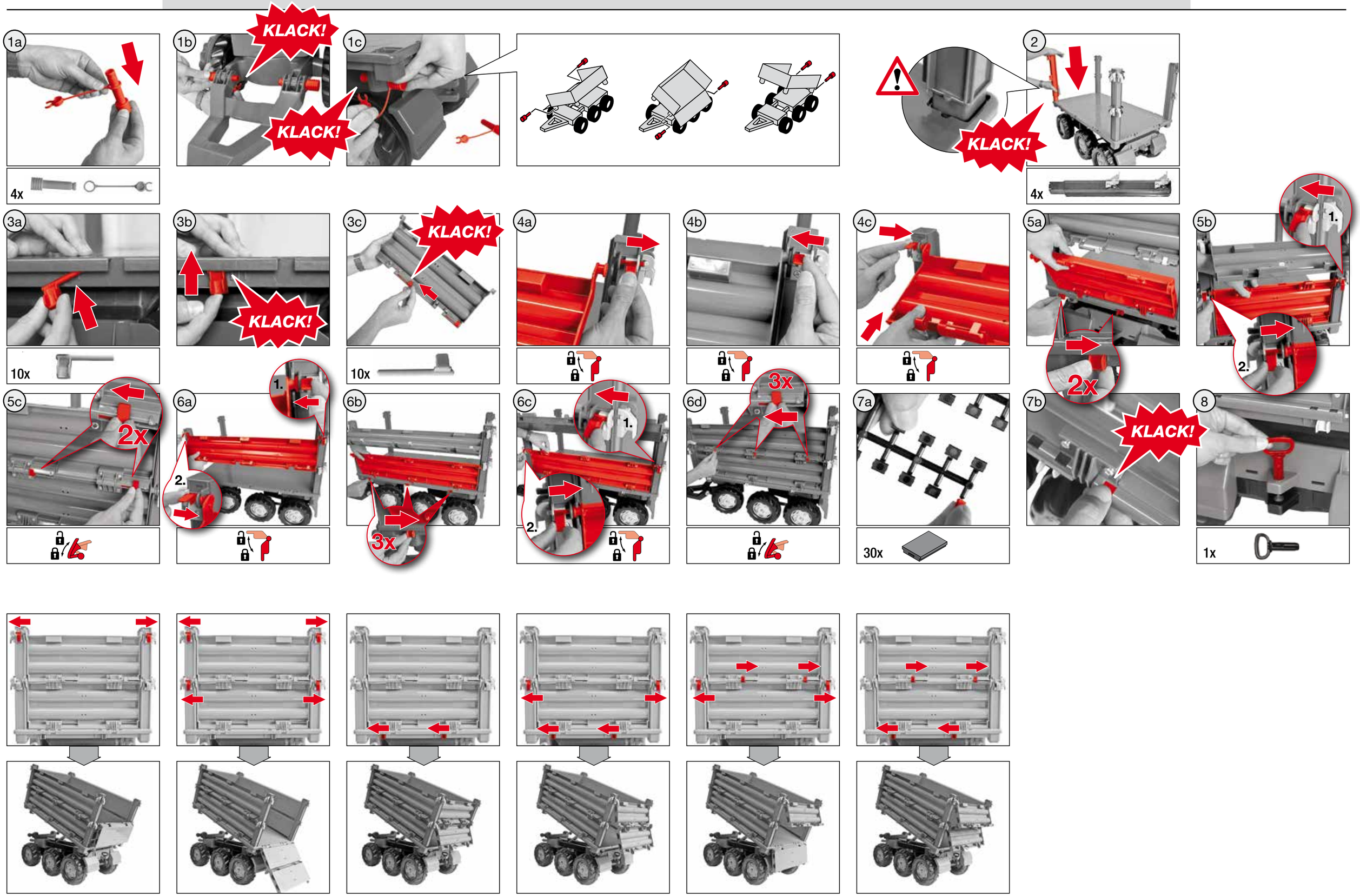
1a
4x
1b
KLACK!
KLACK!
1c
2
KLACK!
4x
3a
10x
3b
KLACK!
3c
KLACK!
10x
4a
4b
4c
5a
2x
5b
1.
2.
5c
2x
6a
1.
2.
6b
3x
6c
1.
2.
6d
3x
7a
30x
7b
KLACK!
8
1x