SLV Elektronik GmbH art.-no. 115600 + 115451

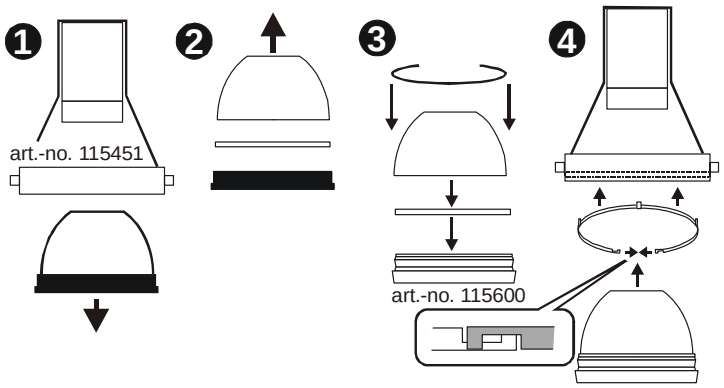

© 2011

SLV Elektronik GmbH art.-no. 115600 + 115451

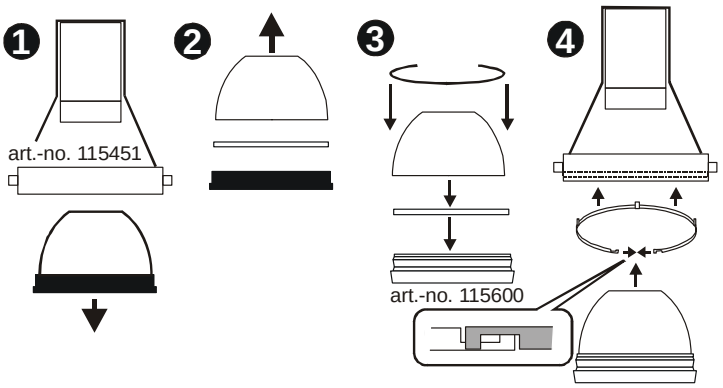

© 2011

SLV Elektronik GmbH art.-no. 115600 + 115451

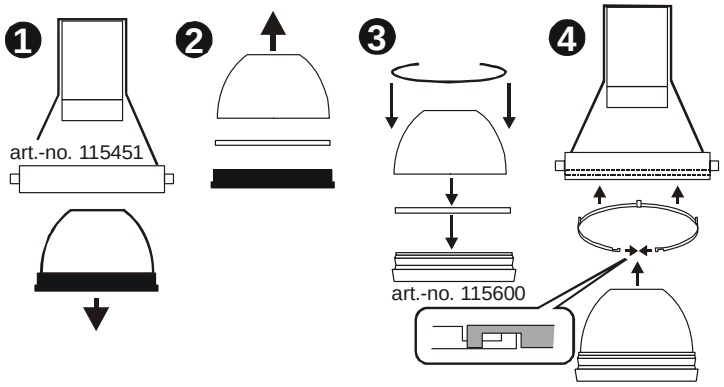

© 2011

SLV Elektronik GmbH art.-no. 115600 + 115451

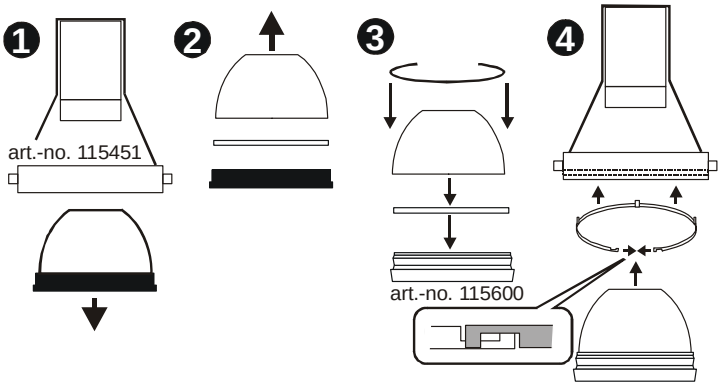

© 2011

SLV Elektronik GmbH art.-no. 115600 + 115451

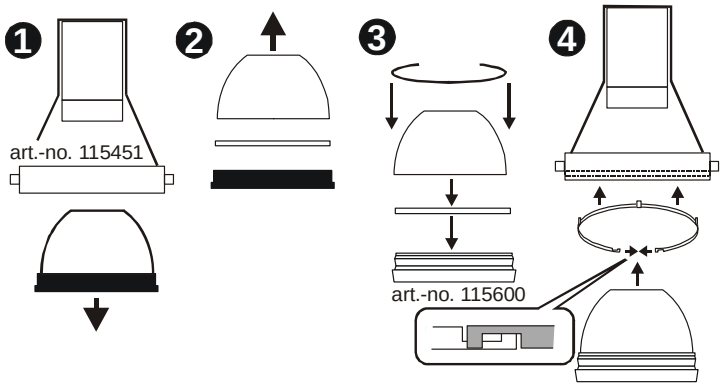

© 2011

SLV Elektronik GmbH art.-no. 115600 + 115451

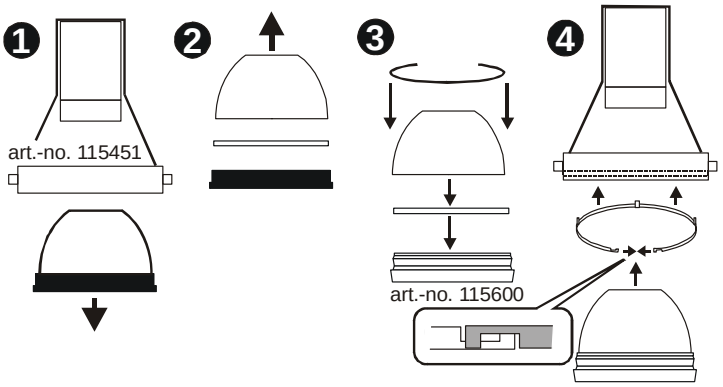

© 2011

SLV Elektronik GmbH art.-no. 115600 + 115451

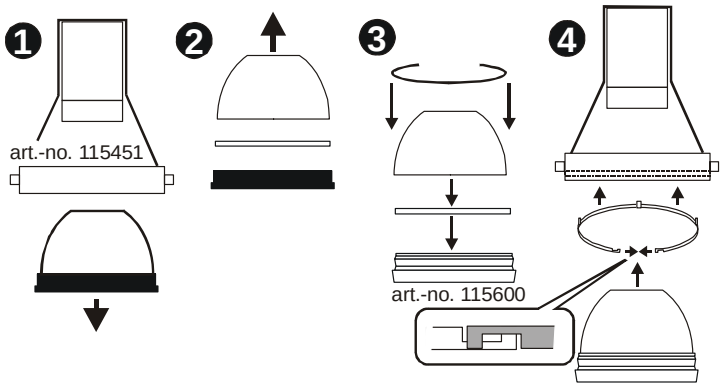

© 2011

SLV Elektronik GmbH art.-no. 115600 + 115451

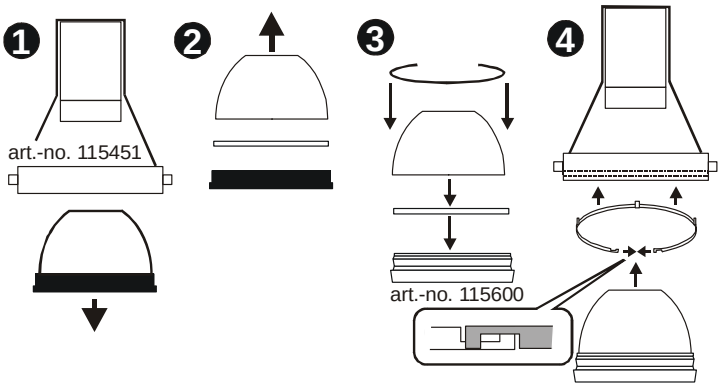

© 2011

SLV Elektronik GmbH art.-no. 115600 + 115001/11/71

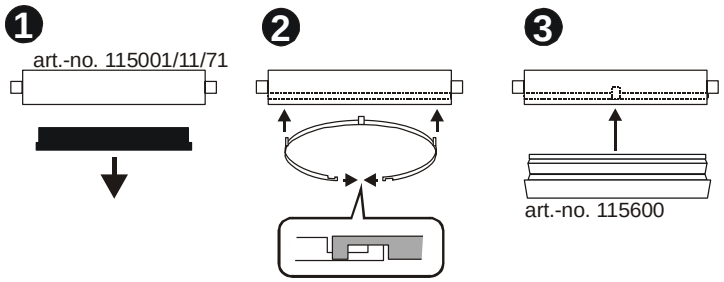

© 2011

SLV Elektronik GmbH art.-no. 115600 + 115001/11/71

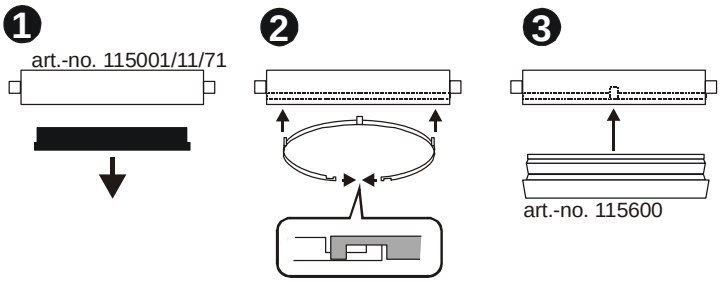

© 2011

SLV Elektronik GmbH art.-no. 115600 + 115001/11/71

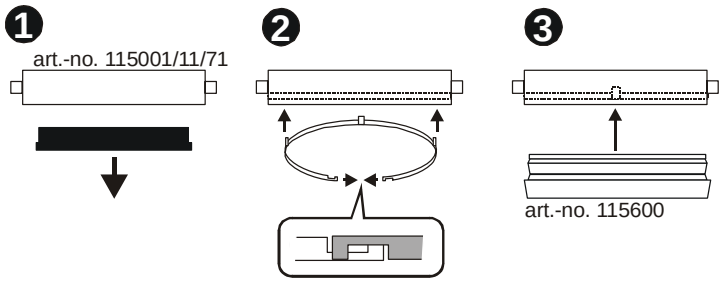

© 2011

SLV Elektronik GmbH art.-no. 115600 + 115001/11/71

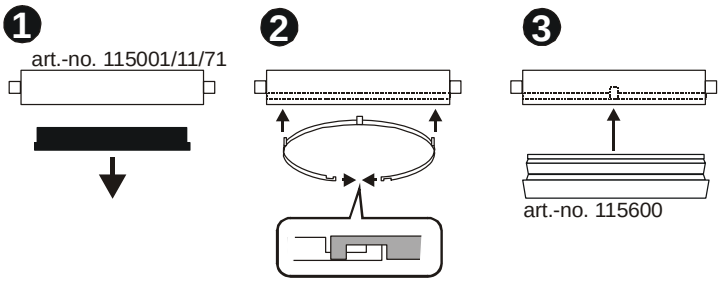

© 2011

SLV Elektronik GmbH art.-no. 115600 + 115001/11/71

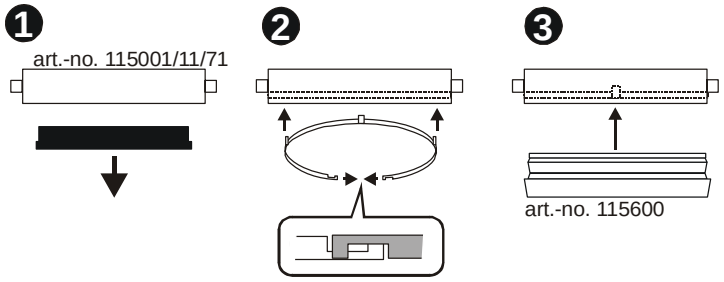

© 2011

SLV Elektronik GmbH art.-no. 115600 + 115001/11/71

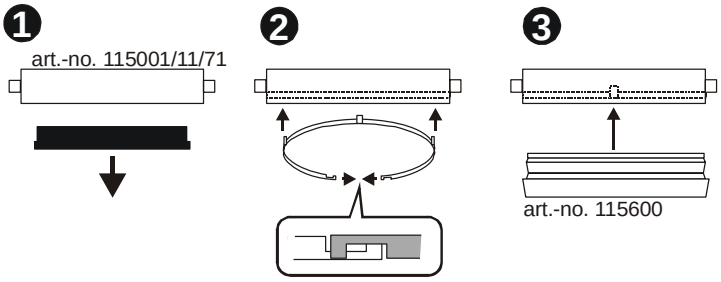

© 2011

SLV Elektronik GmbH art.-no. 115600 + 115001/11/71

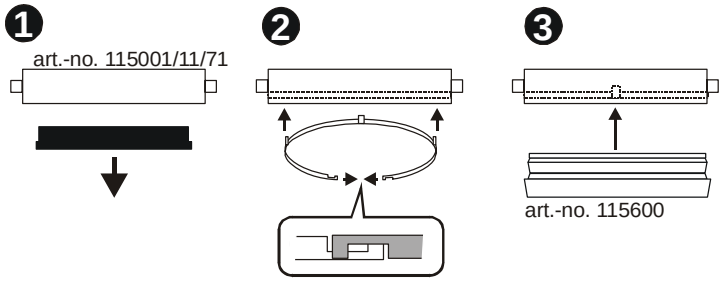

© 2011

SLV Elektronik GmbH art.-no. 115600 + 115001/11/71

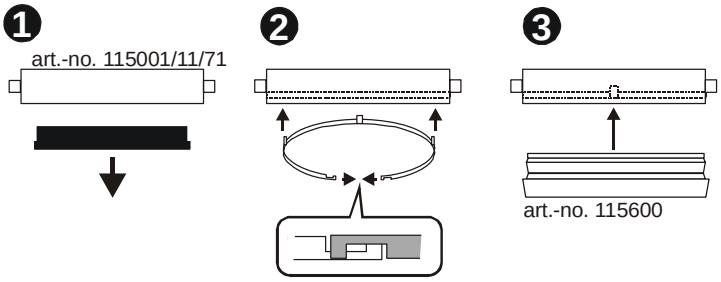

© 2011