beurer

UB 60
Green Planet



OEKO TEX® STANDARD 100 Special Articles 24.HDE.72388 Hohenstein HTTI www.oeko-tex.com

EN Heated Underblanket
Instructions for use

CE

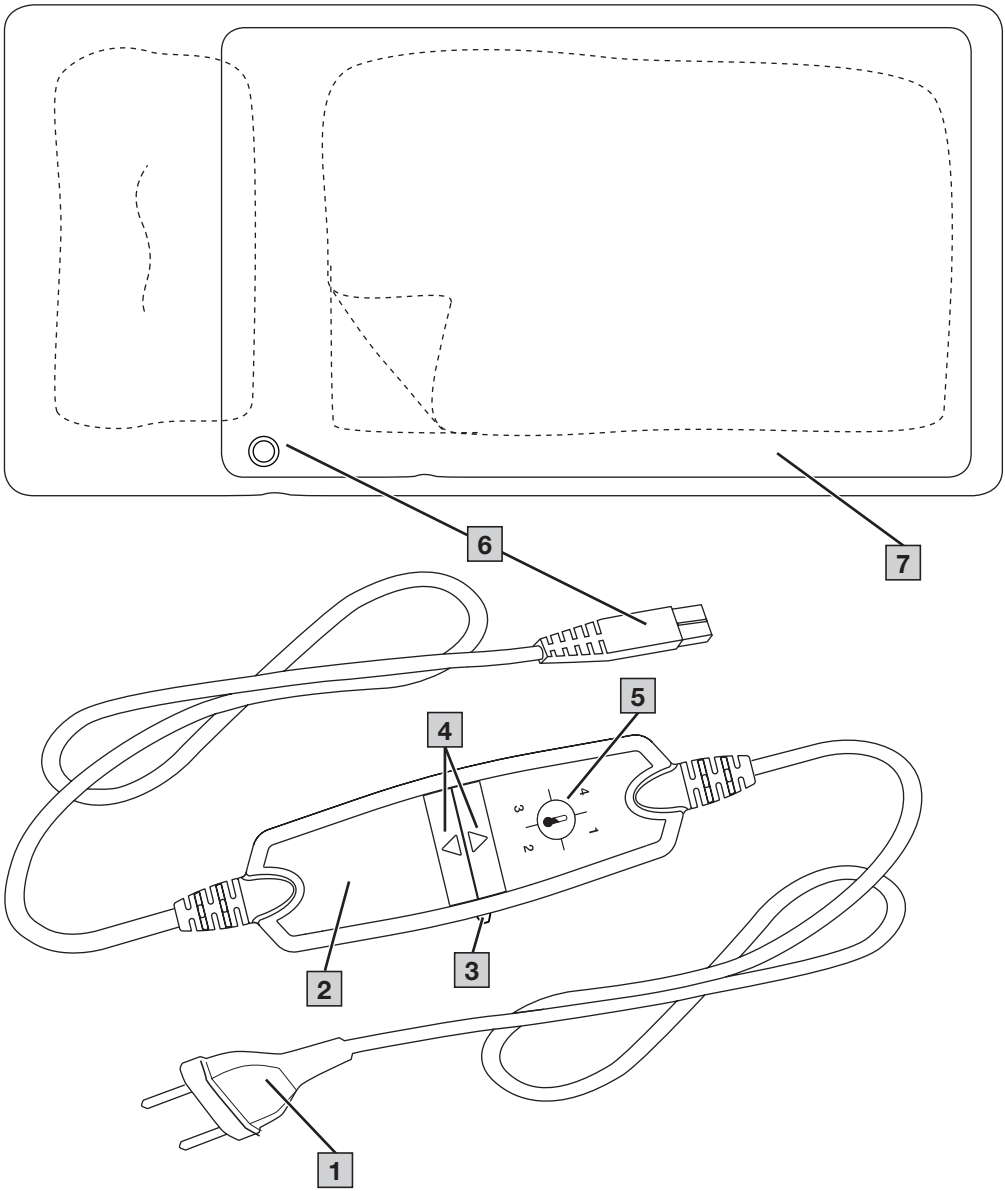
6
7
5
4
3
2
1
4
1
2
3

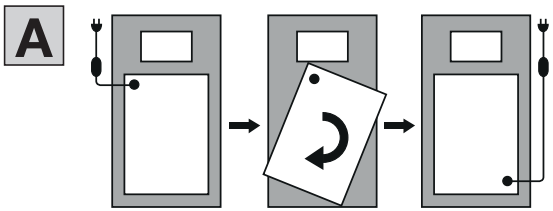
A

ENGLISH

Read these instructions for use carefully. Observe the warnings and safety notes. Keep these instructions for use for future reference. Make the instructions for use accessible to other users. If the device is passed on, provide the next user with these instructions for use.

In this document, the heated underblanket together with the control is referred to simply as "device".

In this document, the heated underblanket without the control is referred to simply as "heating element".

CONTENTS

1. Included in delivery 3
2. Signs and symbols 3
3. Safety notes 4
4. Intended use 5
5. Device description 5
6. Operation 5
   6.1 Safety 5
   6.2 Initial use 6
   6.3 Switching on 6
   6.4 Setting the temperature 6
   6.5 Automatic switch-off 6
   6.6 Switching off 6
7. Cleaning and maintenance 6
8. Flash codes – what if there are problems? 6
9. Storage 7
10. Disposal 7
11. Technical specifications 7
12. Guarantee/service 7

1. INCLUDED IN DELIVERY

Check that the exterior of the cardboard delivery packaging is intact and make sure that all contents are present. Before use, ensure that there is no visible damage to the device or accessories and that all packaging material has been removed. If you have any doubts, do not use the device and contact your retailer or the specified Customer Service address. You can find more information on Beurer Green Planet and sustainability at the following QR code.

- 1 heating element
- 1 control
- 1 copy of instructions for use

2. SIGNS AND SYMBOLS

The following symbols are used on the device, in these instructions for use, on the packaging and on the type plate for the device:

⚠ DANGER Indicates an imminent danger. If it is not avoided, death or serious injury will occur.
⚠ WARNING Indicates a potentially imminent hazard. If it is not avoided, there is a risk of death or serious injury.
⚠ CAUTION Indicates a potentially imminent hazard. If it is not avoided, slight or minor injuries may result.
NOTICE Indicates a potentially harmful situation. If it is not avoided, the device or something in its vicinity may be damaged.

Product information Note on important information
Read the instructions
Do not use folded or rucked
Do not insert pins
Not to be used by very young children (0 - 3 years)
Manufacturer
Protection class II device
This product satisfies the requirements of the applicable European and national directives.
United Kingdom Conformity Assessed Mark
The products demonstrably meet the requirements of the Technical Regulations of the EAEU.
The electronic device must not be disposed of with household waste
Marking to identify the packaging material. A = Material code, B = Material number: 1-7 = Plastics, 20-22 = Paper and cardboard
Separate the product and packaging elements and dispose of them in accordance with local regulations.
This device meets the high requirements of OEKO-TEX® STANDARD 100 for human ecology as verified by the Hohenstein Research Institute.
Wash at a maximum temperature of 30 °C Very gentle wash
Do not bleach
Do not tumble dry
Do not iron
Do not dry clean
Manufacturer in accordance with the Packaging Regulation (PPWR)

IMPORTANT INSTRUCTIONS – RETAIN FOR FUTURE USE

⚠ WARNING

- Non-observance of the following notes may result in personal injury or material damage (electric shock, skin burns, fire). The following safety and hazard information is not only intended to protect your health and the health of others, it should also protect the device. For this reason, pay attention to these safety notes and include these instructions when handing over the device to others.
- This device must not be used by persons who are not sensitive to heat or by other vulnerable persons who may not be able to react to overheating (e.g. diabetics, persons with skin alterations due to illness or scarred tissue in the application area, after taking pain relief medication or alcohol).
- This device must not be used by very young children (0-3 years old) as they are unable to respond to overheating.
- The device can be used by children older than 3 and younger than 8 years of age provided they are supervised. For this, the control must always be set to the minimum temperature.
- This device may be used by children over the age of 8 and by people with reduced physical, sensory or mental skills or a lack of experience or knowledge, provided that they are supervised or have been instructed on how to use the device safely, and are fully aware of the consequent risks of use.
- Children must not play with the device.
- Cleaning and user maintenance must not be performed by children unless supervised.
- This device is not designed for use in hospitals.
- The device is only intended for domestic/private use, not for commercial use.
- Do not insert pins.
- Do not use folded or rucked.
- Do not use if wet.
- Before use on an adjustable bed, check that the heating element and the cables are not, for example, trapped in a hinge or bunched up.
- This device must only be used in conjunction with the control specified on the label.
- This device must only be connected to the mains voltage that is specified on the label.
- If the device is being used over several hours, we recommend that you set the lowest temperature setting on the control to avoid the body overheating and thereby any potential burns to the skin or heat stroke.

- The electrical and magnetic fields emitted by this device may interfere with the function of your pacemaker. However, they are still well below the limits: electrical field strength: max. 5000 V/m, magnetic field strength: max. 80 A/m, magnetic flux density: max. 0.1 millitesla. Please therefore consult your doctor and the manufacturer of your pacemaker before using this device.
- Do not pull, twist or make sharp bends in the cables.
- If the cable and control of the device are not positioned properly, there may be a risk of becoming entangled in, being strangled by, tripping over, or stepping on the cable and control. The user must ensure that excess lengths of cable, and cables in general, are safely routed.
- Check this device frequently for signs of wear and tear or damage. If any such signs are evident, if the device has been used incorrectly or if it no longer heats up, it must be checked by the manufacturer before being switched on again.
- Under no circumstances should you open or repair the device (including the accessories) yourself, as faultless functionality can no longer be guaranteed thereafter. Failure to observe will invalidate the guarantee.
- If the mains connection cable of this device is damaged, it must be disposed of. If it cannot be removed, the device must be disposed of.
- Do not expose control and cables to direct sunlight.
- When this device is switched on:
  - sharp-edged objects must not be placed on it,
  - heat sources such as hot-water bottles or similar must not be placed on it.
- The electronic components in the control warm up when the device is in use. For this reason, the control must never be covered or placed on the heating element when it is in use.
- Allow the device to cool down before storing it away. Failure to observe this may result in damage to the device.
- To avoid severe creasing in the device, do not place any objects on top of it while it is being stored. Otherwise the device may get damaged.
- It is essential to observe the information relating to the following chapters: Operation, Cleaning and maintenance, Storage.
- If you should have any questions about using our devices, please contact our Customer Services department.

4. INTENDED USE

⚠ CAUTION

This device is intended only for warming beds.

5. DEVICE DESCRIPTION

The associated drawings are shown on page 3.

1 Supply plug
2 Control
3 Slider for ON/OFF
4 Buttons for setting temperature
5 Illuminated temperature settings
6 Plug-in coupling
7 Heating element

6. OPERATION

6.1 Safety

NOTICE

- The device is fitted with a SAFETY SYSTEM. This sensor technology provides protection against overheating across the entire surface of the heating element with an automatic switch-

off in the event of a fault. If the SAFETY SYSTEM has switched off the device, the control will no longer light up in any way, even when switched on.
- Please note that for safety reasons, the device can no longer be operated after a fault has occurred and must either be disposed of or be sent to the specified service address.
- Do not under any circumstances connect the defective heating element with another control of the same type. This would also trigger a permanent switch-off by the safety system in the control.

6.2 Initial use

1. Starting from the foot of the bed, place the heating element flat on your mattress (see figure).
2. First, connect the control to the heating element by inserting the plug-in coupling.
3. Then plug the mains plug into the socket.
4. Then fit your sheet over it as usual so that the heating element is between the mattress and the sheet.

NOTICE

Make sure that the heating element is smoothed out completely flat and that it cannot bunch up or form folds during use.

Lie in comfort
If the plug-in connector at shoulder level bothers you, you can rotate the heating element by 180° so that the plug-in connector lies at the foot of the bed A. Beurer offers a control with a longer connection cable (Item no. 108.598) so that the controller is within comfortable reach of your hand. This can be obtained directly from Beurer Customer Service.

6.3 Switching on

Set the ON/OFF slider 3 to the ON (I) position to switch on the device (see control figure). The temperature settings will then light up.

6.4 Setting the temperature

To increase the temperature, press the △ button. To decrease the temperature, press the ▽ button. 4
After switching on the temperature setting is illuminated.

Setting 0: OFF
Setting 1: minimum heat
Setting 2-3: Individual heat
Setting 4: maximum heat

- The fastest way to warm up the device is to initially set the highest temperature setting.
- We strongly recommend switching on the device approx. 30 minutes before going to bed and covering it with the duvet in order to prevent heat loss.

⚠WARNING

If the device is being used over several hours, we recommend that you set the lowest temperature setting on the control to avoid the body overheating and thereby any potential burns to the skin or heat stroke.

Automatic switch-back
This device comes with an automatic safety switch-back. Temperature settings 4 and 3 are automatically switched back to temperature setting 2 after 3 hours.

6.5 Automatic switch-off

This device is equipped with an automatic switch-off function. This turns off the heat supply approx. 12 hours after the initial use of the device. This is indicated by a flashing temperature setting. In order to reactivate the device, the sliding switch 3 must initially be set to off (“0” position). After about 5 seconds it is possible to switch it on again.

6.6 Switching off

Set the ON/OFF slider to the OFF (0) position to switch off the device. The temperature settings are then no longer illuminated.

If the device is not being used for several days, set the slider to the OFF (0) position and remove the mains plug from the socket.
Then disconnect the control 2 from the heating element by unplugging the plug-in coupling 6.

7. CLEANING AND MAINTENANCE

⚠WARNING

Before cleaning, always remove the power plug from the socket first. Then disconnect the control from the heating element by unplugging the plug-in coupling. Otherwise there is a risk of electric shock.

NOTICE

The control must never come into contact with water or other liquids, as this may cause damage.
- To clean the control, use a dry, lint-free cloth. Do not use any chemical or abrasive cleaning agents.
- Small marks on the heating element can be removed with a damp cloth and, if necessary, with a little liquid detergent for delicate laundry.

NOTICE

Please note that the heating element must not be chemically cleaned, wrung out, tumble dried, put through a mangle or ironed. Otherwise the heating element may get damaged.
- The heating element is machine-washable.
- Set the washing machine to a particularly gentle wash cycle at 30°C (wool cycle). Use a delicate laundry detergent and measure it out according to the manufacturer’s instructions.
- Immediately after washing, reshape the heating element to its original dimensions while it is still damp and spread it out flat on a clothes horse to dry.

NOTICE

- Do not use pegs or similar items to attach the heating element to the clothes horse. Otherwise the heating element may get damaged.
- Do not reconnect the control to the heating element until the plug-in coupling and heating element are completely dry. Otherwise the device may get damaged.

⚠WARNING

Never switch the device on to dry it! Otherwise there is a risk of electric shock.

8. FLASH CODES – WHAT IF THERE ARE PROBLEMS?

Problem	Temperature settings not illuminated
Possible cause	The mains plug is not connected to the socket and/or is not switched on.
Solution	Connect the mains plug and switch on the device.

Problem	Temperature settings repeatedly not illuminated
Possible cause	The safety system switches off the device.
Solution	Contact Customer Services.

Problem	The LED segment of temperature setting 1 flashes quickly (4 x/sec.)
Possible cause	Control is not properly connected to the heating element.
Solution	1. Switching off 2. Connect the plug-in coupling correctly 3. Switching on If this LED segment continues to flash quickly, contact Customer Service.

Problem	The LED segment of temperature setting 1 flashes slowly (1 x/sec.)
Possible cause	The device was switched off by the timer that was previously set.
Solution	To restart the device, set the side slider for ON/OFF and switch-off times to the OFF position. You can select the desired switch-off time again after 5 seconds.

9. STORAGE

If you do not plan to use the device for a long period of time, we recommend that you store it in the original packaging. For this purpose, disconnect the control from the heating element by unplugging the plug-in coupling.

10. DISPOSAL

For environmental reasons, do not dispose of the device in household waste at the end of its service life. Dispose of the device at a suitable local collection or recycling point in your country. Observe the local regulations for material disposal. Dispose of the device in accordance with EC Directive – WEEE (Waste Electrical and Electronic Equipment). If you have any questions, please contact the local authorities responsible for waste disposal. You can obtain the location of collection points for old devices from the local or municipal authorities, local waste disposal company or your dealer, for example.

11. TECHNICAL SPECIFICATIONS

See the type plate label on the heating element.

12. GUARANTEE/SERVICE

Further information on the guarantee and guarantee conditions can be found in the guarantee leaflet supplied.

Subject to errors and changes

Beurer GmbH • Söflinger Str. 218 • 89077 Ulm, Germany
www.beurer.com

UK Importer: BEURER UK Ltd., Suite 16, Stonecross Place, Stonecross Lane North, WA3 2SH, Lowton, United Kingdom

300.36_UB60GP_2026-11-13_02_IM2_BEU_EN