VP17-3, SST (2U/1L Warmer)

Height: 19.0" Width: 8.4" Depth: 18.8"
(48.3cm) (21.3cm) (47.8cm)

- Pourover brewer requires no plumbing – completely portable
- SplashGard® funnel deflects hot liquids away from the hand
- All stainless steel construction
- Three individually controlled warmers
- PROP 65 Warning Decal included in packaging with equipment
- Servers not included unless otherwise noted

Server(s) sold separately

Agency:

Specifications

Product #: 13300.0004

Water Access: Not Plumbed

Finish: Stainless

Funnel: Black Plastic

Warmers: Two Upper/ One Lower

Additional Features

Electrical & Capacity

Volts*	Amps	Watts	Cord Attached	Plug Type	8oz cups/hr 236ml cups/hr	Input H²O Temp.	Phase	# Wires plus Ground	Hertz
120	13.9	1670	Yes	NEMA 5-15P	62	60°F (15.5°C)	1	2	60

*When a BUNN is machine rated 120/208-240V, 120/208V or 120/240V, the higher voltage is the supply voltage needed to power the machine. The 120V is there to supply power to some components rated 120V in the machine, but it is not the supply voltage and would not power the machine if the machine is marked with the before mentioned ratings.

Plumbing Requirements

PSI	kPa	Fitting Supplied	Water Flow Required (GPM)
-	-	-	-

CAD Drawings

2D	Revit	KLC
●		

WARNING: This product can expose you to chemicals including Bisphenol A (BPA), which is known to the State of California to cause birth defects or other reproductive harm. For more information go to www.P65Warnings.ca.gov

BUNN® reserves the right to change specifications and product design without notice. Such revisions do not entitle the buyer to corresponding changes, improvements, additions or replacements for previously purchased equipment. For most current specifications and other info visit bunn.com.

Last Updated: 09/28/2026

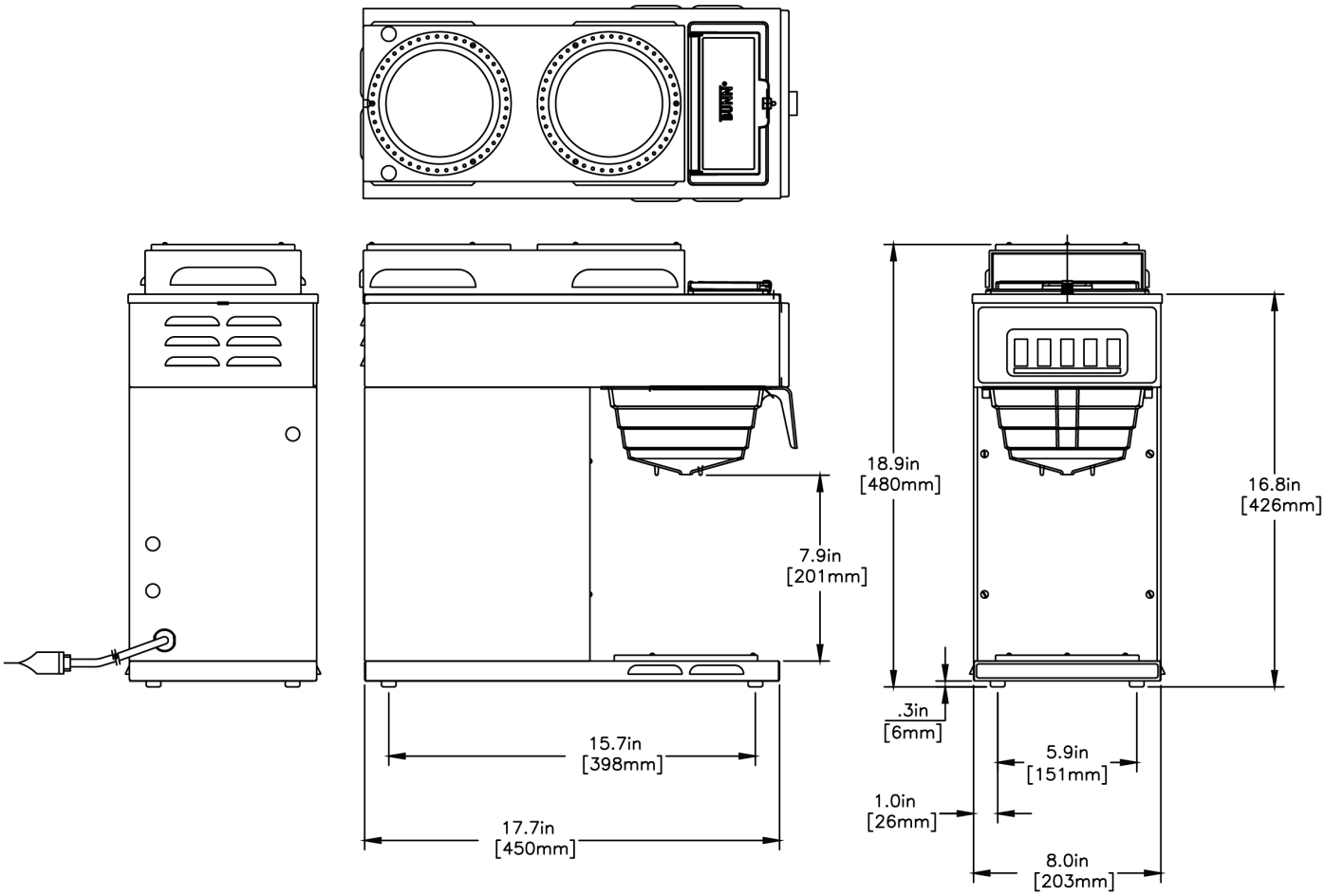

	Unit			Shipping				
	Height	**Width**	**Depth**	**Height**	**Width**	**Depth**	**Weight**	**Volume**
English	19.0 in.	8.4 in.	18.8 in.	23.8 in.	12.5 in.	26.5 in.	28.150 lbs	4.566 ft³
Metric	48.3 cm	21.3 cm	47.8 cm	60.3 cm	31.8 cm	67.4 cm	12.769 kgs	0.129 m³

BUNN® reserves the right to change specifications and product design without notice. Such revisions do not entitle the buyer to corresponding changes, improvements, additions or replacements for previously purchased equipment. For most current specifications and other info visit bunn.com.

Last Updated: 09/28/2026

Related Products & Accessories: VP17-3, SST (2U/1L Warmer)(13300.0004)

FUNNEL W/DECAL,PPK NAR BLK(SM)

Product #: 02774.0011[2]

FUNNEL W/DECAL,PPK NAR BLK(LG)

Product #: 04274.0012[2]

WX2, 120V

Product #: 06310.0004[7]

WX1, 120V

Product #: 06450.0004[1]

FILTERS,REGULAR1M 500/2 50/CL

Product #: 20115.0000

FUNNEL ASSY, SST-BLK HDL(7.12

Product #: 20216.0000[2]

FUNNEL ASSY, SST-PP BLK HNDL

Product #: 29151.0000[2]

FUNNEL ASSY,SST-PP ORANGE HDL

Product #: 29151.0001[2]

[1]NSF Certified [2]NSF Certified with spec sheet model listed [3]NSF Certified under Solventum Purification [4]NSF Certified under Vivreau Ltd [5]NSF Certified under Zojirushi [6]NSF Certified under Qins Inc [7]NSF COMPONENT Certified

BUNN® reserves the right to change specifications and product design without notice. Such revisions do not entitle the buyer to corresponding changes, improvements, additions or replacements for previously purchased equipment. For most current specifications and other info visit bunn.com.

Last Updated: 09/28/2026

Serving & Holding Options: VP17-3, SST (2U/1L Warmer)(13300.0004)

EASY POUR®,(BLK) 1/CS

Product #: 06100.0101

EASY POUR®,(BLK) 2/CS

Product #: 06100.0102

EASY POUR®,(BLK) 3/CS

Product #: 06100.0103

EASY POUR®,(BLK) 6/CS

Product #: 06100.0106

EASY POUR®,(BLK) 12/CS

Product #: 06100.0112

EASY POUR®,(BLK) 24/CS

Product #: 06100.0124

EASY POUR®,(ORN) 1/CS

Product #: 06101.0101

EASY POUR®,(ORN) 2/CS

Product #: 06101.0102

EASY POUR®,(ORN) 3/CS

Product #: 06101.0103

EASY POUR®,(ORN) 24/CS

Product #: 06101.0124

DECANTER,GLASS-BLK 12C 24/CS

Product #: 42400.0024

DECANTER,GLASS-BLK 12CUP 1PK

Product #: 42400.0101

DECANTER,GLASS-BLK 12C 3/CS

Product #: 42400.0103

DECANTER,GLASS-ORN 12C 24/CS

Product #: 42401.0024

DECANTER, GLASS-ORN 12 CUP 1PK

Product #: 42401.0101

[1]NSF Certified [2]NSF Certified with spec sheet model listed [3]NSF Certified under Solventum Purification [4]NSF Certified under Vivreau Ltd [5]NSF Certified under Zojirushi [6]NSF Certified under Qins Inc [7]NSF COMPONENT Certified

BUNN® reserves the right to change specifications and product design without notice. Such revisions do not entitle the buyer to corresponding changes, improvements, additions or replacements for previously purchased equipment. For most current specifications and other info visit bunn.com.

Last Updated: 09/28/2026

Serving & Holding Options: VP17-3, SST (2U/1L Warmer)(13300.0004)

DECANTER,GLASS-ORN
12C 3/CS

Product #: 42401.0103

BUNN® reserves the right to change specifications and product design without notice. Such revisions do not entitle the buyer to corresponding changes, improvements, additions or replacements for previously purchased equipment. For most current specifications and other info visit bunn.com.

WELBILT®

an Ali Group Company