H3X, ELEMENT SST 120V 1340W

Height: 22.3" (56.6cm) Width: 8.0" (20.3cm) Depth: 20.4" (51.8cm)

- Digital thermostat provides consistent and precise temperatures from 60° - 212°F (15.6°-100°C)
- Contemporary, low-profile design for front-of-house and self-service settings
- Push and Hold dispense -with one programmable Portion Control setting for a volume of up to 2 gallons (7.57 liters)
- LED display provides simple temperature adjustment
- Thinsulate® tank insulation provides increased energy efficiency
- Programmable "Energy Saver Mode" reduces operating costs during idle periods
- 7.75in (196mm) cup clearance accommodates a range of serving options for custom-crafted, hand pour coffees and teas

Agency:

UL LISTED NSF

Specifications

Product #: 45300.0008

Water Access: Plumbed

Finish: Stainless

Temp. Setting: 212°F (100.000°C)

Additional Features

Electrical & Capacity

Volts*	Amps	Watts	Cord Attached	Plug Type	8oz cups/hr 236ml cups/hr	Input H²O Temp.	Phase	# Wires plus Ground	Hertz
120	11.2	1340	Yes	NEMA 5-15P	-	60°F (15.5°C)	1	2	60

*When a BUNN is machine rated 120/208-240V, 120/208V or 120/240V, the higher voltage is the supply voltage needed to power the machine. The 120V is there to supply power to some components rated 120V in the machine, but it is not the supply voltage and would not power the machine if the machine is marked with the before mentioned ratings.

Plumbing Requirements

PSI	kPa	Fitting Supplied	Water Flow Required (GPM)
20-90	138-621	1/4" Male Flare Fitting	-

⚠ **WARNING:**

CAD Drawings

2D	Revit	KLC
●		

BUNN® reserves the right to change specifications and product design without notice. Such revisions do not entitle the buyer to corresponding changes, improvements, additions or replacements for previously purchased equipment. For most current specifications and other info visit bunn.com.

Last Updated: 10/07/2026

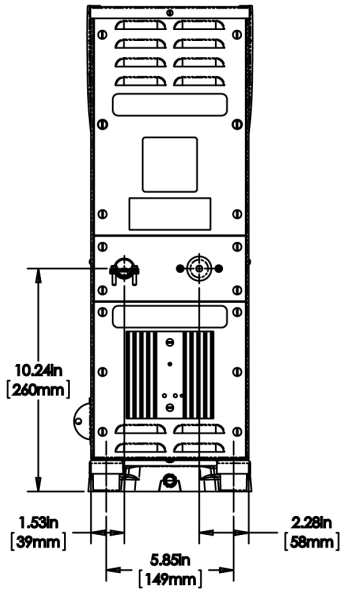

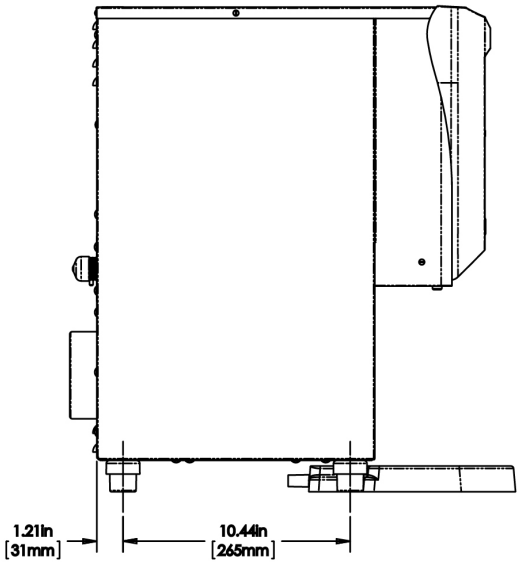

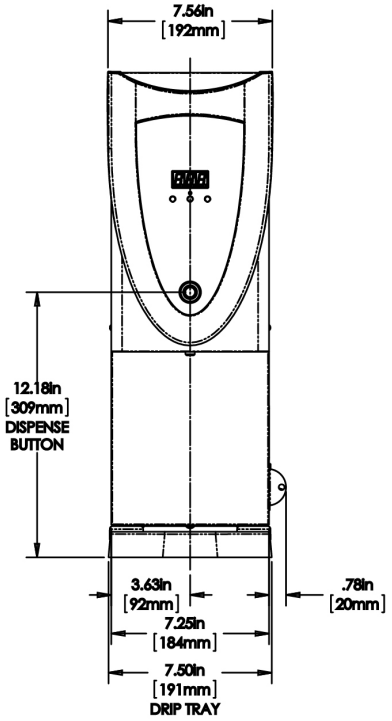

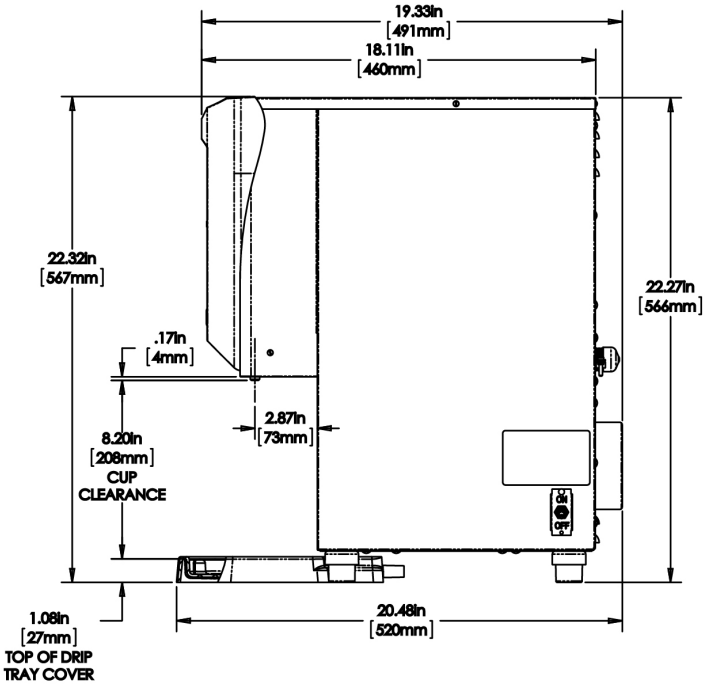

	Unit			Shipping				
	Height	Width	Depth	Height	Width	Depth	Weight	Volume
English	22.3 in.	8.0 in.	20.4 in.	32.3 in.	10.8 in.	21.9 in.	23.810 lbs	4.423 ft³
Metric	56.6 cm	20.3 cm	51.8 cm	82.1 cm	27.5 cm	55.6 cm	10.800 kgs	0.125 m³

BUNN® reserves the right to change specifications and product design without notice. Such revisions do not entitle the buyer to corresponding changes, improvements, additions or replacements for previously purchased equipment. For most current specifications and other info visit bunn.com.

Last Updated: 10/07/2026

Related Products & Accessories: H3X, ELEMENT SST 120V 1340W(45300.0008)

WATER FILTER, EQHP-10L

Product #: 39000.0001[3]

TRAY, DRIP H3E ELEMENT

Product #: 48885.0001

KIT, UTILITY COVER-REAR H3X ELEMENT

Product #: 53498.1000[2]

SYSTEM, WQ-55(2)5L

Product #: 56000.0001[1]

SYSTEM, WEQ-10(1.5)5L

Product #: 56000.0024[1]

CARTRIDGE, WQ-55(2)5L

Product #: 56000.0101[1]

CARTRIDGE, WEQ-10 (1.5)5L

Product #: 56000.0121[1]

[1]NSF Certified [2]NSF Certified with spec sheet model listed [3]NSF Certified under Solventum Purification [4]NSF Certified under Vivreau Ltd [5]NSF Certified under Zojirushi [6]NSF Certified under Qins Inc [7]NSF COMPONENT Certified

BUNN® reserves the right to change specifications and product design without notice. Such revisions do not entitle the buyer to corresponding changes, improvements, additions or replacements for previously purchased equipment. For most current specifications and other info visit bunn.com.

Last Updated: 10/07/2026

Serving & Holding Options: H3X, ELEMENT SST 120V 1340W(45300.0008)

Serving and Holding selections are currently unavailable. Please contact your sales representative to find out more information.

[1]NSF Certified [2]NSF Certified with spec sheet model listed [3]NSF Certified under Solventum Purification [4]NSF Certified under Vivreau Ltd [5]NSF Certified under Zojirushi [6]NSF Certified under Qins Inc [7]NSF COMPONENT Certified

BUNN® reserves the right to change specifications and product design without notice. Such revisions do not entitle the buyer to corresponding changes, improvements, additions or replacements for previously purchased equipment. For most current specifications and other info visit bunn.com.

Last Updated: 10/07/2026

WELBILT®

an Ali Group Company