BTB, PREMIA 208-240V BUNNLINK WIFI AC

Height: 33.5" (85.1cm) Width: 26.4" (67.1cm) Depth: 24.4" (62.0cm)

- Drip-style flavor profile with no crema and excellent cup clarity
- Meet peak daypart demands with fast dispense to increase speed of service and decrease customer wait times
- Automated system manages coffee availability, waste and freshness through all dayparts
- Minimal labor demand with only minutes of operator hands-on time per day
- Push and hold dispense allows consumers to customize individual beverages with ability to mix and match coffee varieties and determine desired fill levels to leave room for other beverage ingredients
- Data on consumption and waste helps drive coffee program decisions and profitability
- Brew on Demand mode to minimize waste and ensure coffee availability
- Liquid auto clean will ensure that the machine is cleaned daily with the proper cleaning solution. Cleaning is automatically initiated when the shroud is placed on the unit. Go up to 30 days without the need to refill cleaner

Agency:

Specifications

Product #: 61000.0002

Water Access: Plumbed

Interface: Cabled

Finish: Stainless/Black

Faucet: None

Hoppers: Three

Hopper Capacity: 3.30 lbs (1.361 kgs)

Display: Full Color Touch

Additional Features

Electrical & Capacity

Volts*	Amps	Watts	Cord Attached	Plug Type	8oz cups/hr 236ml cups/hr	Input H²O Temp.	Phase	# Wires plus Ground	Hertz
208-240	22.0	5200	Yes	NEMA L6-30P	220	60°F (15.5°C)	1	2	60

*When a BUNN is machine rated 120/208-240V, 120/208V or 120/240V, the higher voltage is the supply voltage needed to power the machine. The 120V is there to supply power to some components rated 120V in the machine, but it is not the supply voltage and would not power the machine if the machine is marked with the before mentioned ratings.

Plumbing Requirements

PSI	kPa	Fitting Supplied	Water Flow Required (GPM)
30-90	207-621	3/8" Male Flare Fitting	1.50

CAD Drawings

2D	Revit	KLC
●		

⚠ **WARNING:**

BUNN® reserves the right to change specifications and product design without notice. Such revisions do not entitle the buyer to corresponding changes, improvements, additions or replacements for previously purchased equipment. For most current specifications and other info visit bunn.com.

Last Updated: 08/20/2026

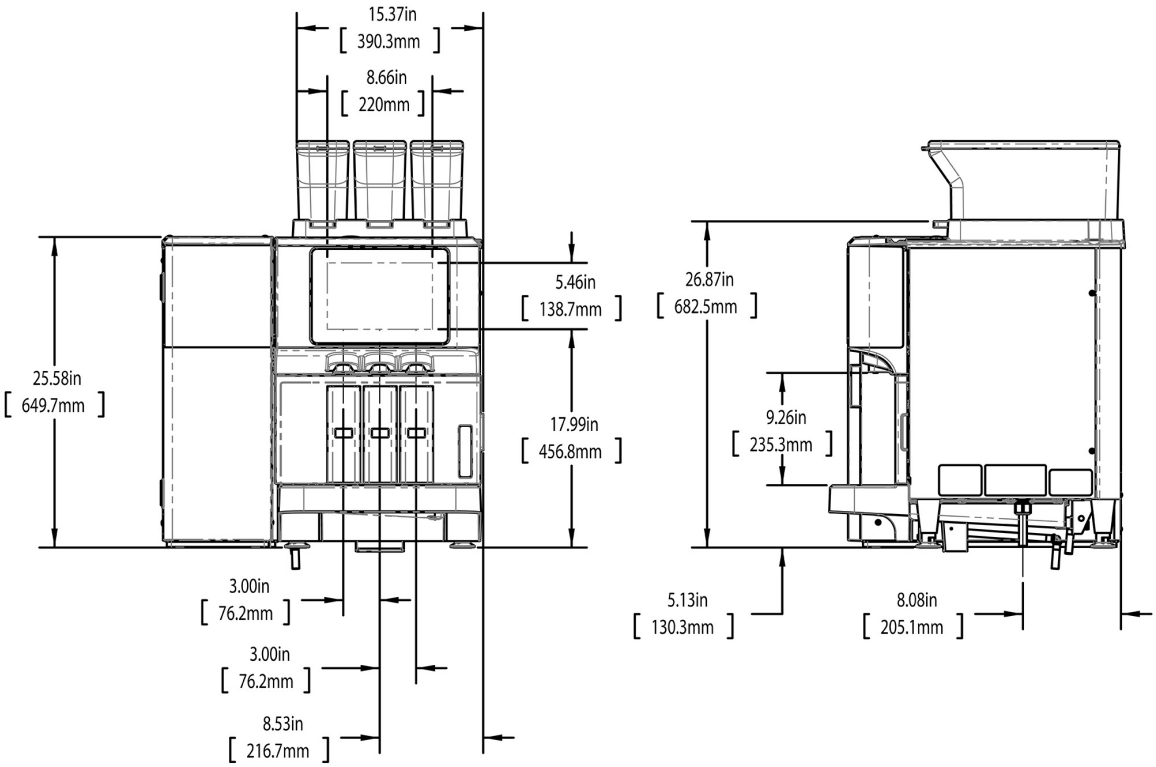

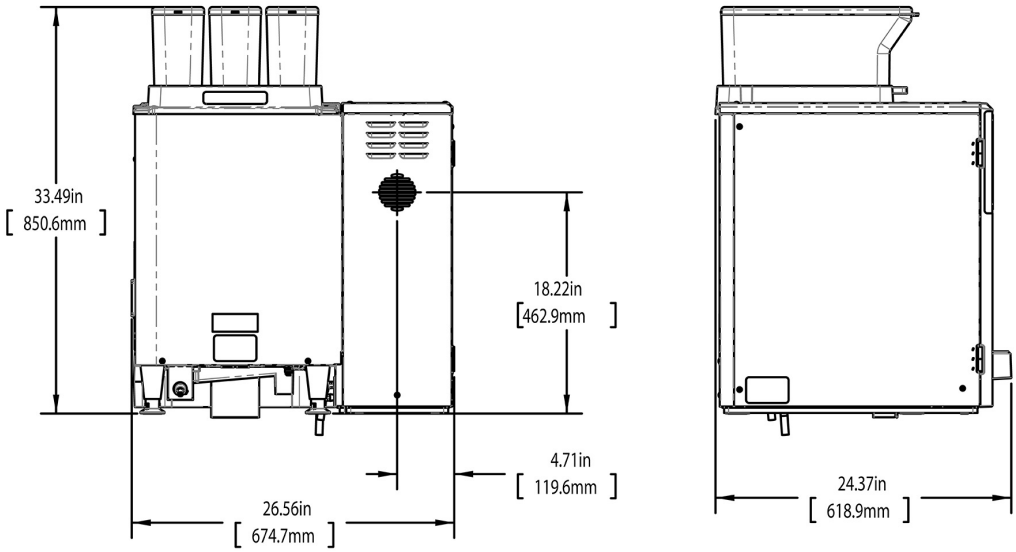

	Unit			Shipping				
	Height	**Width**	**Depth**	**Height**	**Width**	**Depth**	**Weight**	**Volume**
English	33.5 in.	26.4 in.	24.4 in.	-	-	-	200.000 lbs	-
Metric	85.1 cm	67.1 cm	62.0 cm	-	-	-	90.720 kgs	-

BUNN® reserves the right to change specifications and product design without notice. Such revisions do not entitle the buyer to corresponding changes, improvements, additions or replacements for previously purchased equipment. For most current specifications and other info visit bunn.com.

Last Updated: 08/20/2026

Related Products & Accessories: BTB, PREMIA 208-240V BUNNLINK WIFI AC (61000.0002)

SH RESERVOIR, 1.0G BATCH

Product #: 27850.0301[1]

BRUSH, ANGLED 12 INCH

Product #: 47745.0000

SYSTEM, WEQ-35(3).2L

Product #: 56000.0034

CARTRIDGE, WEQ-35 (3).2L

Product #: 56000.0126[1]

LIQUID CLEANER, PREMIA 2.5GAL 2PK

Product #: 58602.1003

KIT, UNDERCOUNTER PICKUP TUBE

Product #: 59295.1000

[1]NSF Certified [2]NSF Certified with spec sheet model listed [3]NSF Certified under Solventum Purification [4]NSF Certified under Vivreau Ltd [5]NSF Certified under Zojirushi [6]NSF Certified under Qins Inc [7]NSF COMPONENT Certified

BUNN® reserves the right to change specifications and product design without notice. Such revisions do not entitle the buyer to corresponding changes, improvements, additions or replacements for previously purchased equipment. For most current specifications and other info visit bunn.com.

Last Updated: 08/20/2026

Serving & Holding Options: BTB, PREMIA 208-240V BUNNLINK WIFI AC(61000.0002)

SH RESERVOIR, 1.0G BATCH

Product #: 27850.0301[1]

[1]NSF Certified [2]NSF Certified with spec sheet model listed [3]NSF Certified under Solventum Purification [4]NSF Certified under Vivreau Ltd [5]NSF Certified under Zojirushi [6]NSF Certified under Qins Inc [7]NSF COMPONENT Certified

BUNN® reserves the right to change specifications and product design without notice. Such revisions do not entitle the buyer to corresponding changes, improvements, additions or replacements for previously purchased equipment. For most current specifications and other info visit bunn.com.

Last Updated: 08/20/2026

WELBILT®

an Ali Group Company