2.5L Lever Action Airpot (1pk)

Height: 14.6" (37.1cm) Width: 6.3" (16.0cm) Depth: 9.0" (22.9cm)

-

Feature points are currently unavailable.

Agency:

Intertek NSF

Specifications

Product #: 32125.0000

Finish: Stainless/Black

Liner: Stainless Steel

Dispense: Lever Action

Lid Color: Black

Additional Features

Holding Capacity

English	Metric
-	-

⚠ **WARNING:** This product can expose you to chemicals including nickel, which is known to the State of California to cause cancer, and DBP, which is known to the State of California to cause birth defects or other reproductive harm. For more information go to www.P65Warnings.ca.gov.

BUNN® reserves the right to change specifications and product design without notice. Such revisions do not entitle the buyer to corresponding changes, improvements, additions or replacements for previously purchased equipment. For most current specifications and other info visit bunn.com.

Last Updated: 08/31/2026

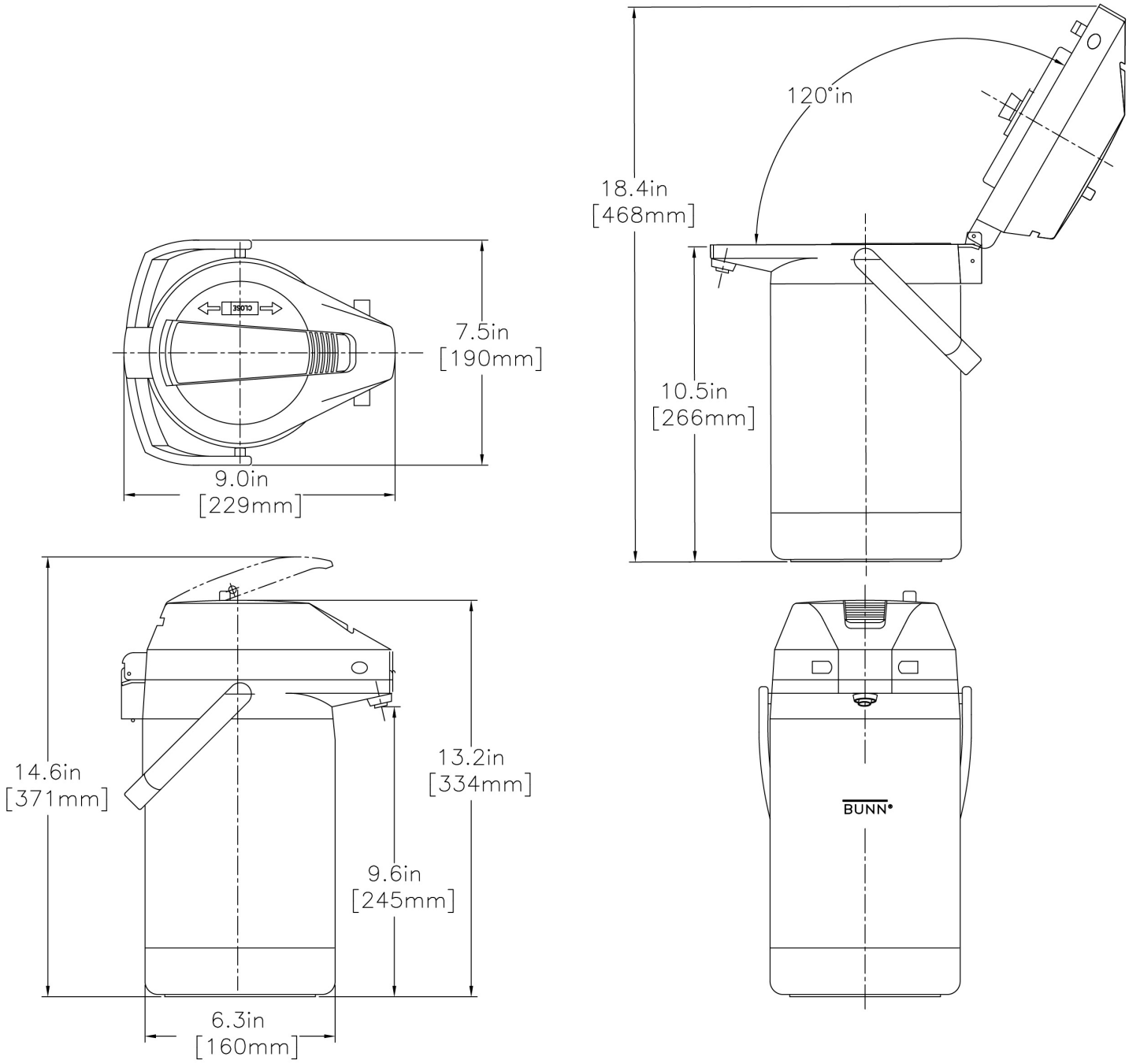

Unit				Shipping				
	Height	**Width**	**Depth**	**Height**	**Width**	**Depth**	**Weight**	**Volume**
English	14.6 in.	6.3 in.	9.0 in.	16.5 in.	9.8 in.	8.3 in.	4.850 lbs	0.777 ft^3
Metric	37.1 cm	16.0 cm	22.9 cm	41.9 cm	24.9 cm	21.1 cm	2.200 kgs	0.022 m^3

BUNN® reserves the right to change specifications and product design without notice. Such revisions do not entitle the buyer to corresponding changes, improvements, additions or replacements for previously purchased equipment. For most current specifications and other info visit bunn.com.

Last Updated: 08/31/2026

Related Products & Accessories: 2.5L Lever Action Airpot (1pk)(32125.0000)

RACK ASSY,UNIV-2 APR-1 L/1U

Product #: 35728.0000

RACK ASSY,UNIV-2-APR 2 L

Product #: 35728.0001

RACK ASSY,UNIV-3 APR-3 L

Product #: 35728.0002

RACK ASSY,UNIV-4 APR-2 L/2U

Product #: 35728.0003

RACK ASSY,UNIV-5 APR-2 L/3U

Product #: 35728.0004

RACK ASSY,UNIV-6 APR-3 L/3U

Product #: 35728.0005

[1]NSF Certified [2]NSF Certified with spec sheet model listed [3]NSF Certified under Solventum Purification [4]NSF Certified under Vivreau Ltd [5]NSF Certified under Zojirushi [6]NSF Certified under Qins Inc [7]NSF COMPONENT Certified

BUNN® reserves the right to change specifications and product design without notice. Such revisions do not entitle the buyer to corresponding changes, improvements, additions or replacements for previously purchased equipment. For most current specifications and other info visit bunn.com.

Last Updated: 08/31/2026

WELBILT®

an Ali Group Company