STAND ASSY, TF SERVER GEN3

Height: 9.7" (24.6cm) Width: 9.1" (23.1cm) Depth: 12.9" (32.8cm)

- For use with GEN3 TF ThermoFresh® servers
- Added top plate keeps the server from locking into the stand
- Easy on and off placement of the server from the stand
- Removable drip tray included

Agency:

Specifications

Product #: 39795.0200

Additional Features

Holding Capacity

English	Metric
-	-

⚠ **WARNING:**

BUNN® reserves the right to change specifications and product design without notice. Such revisions do not entitle the buyer to corresponding changes, improvements, additions or replacements for previously purchased equipment. For most current specifications and other info visit bunn.com.

Last Updated: 09/03/2026

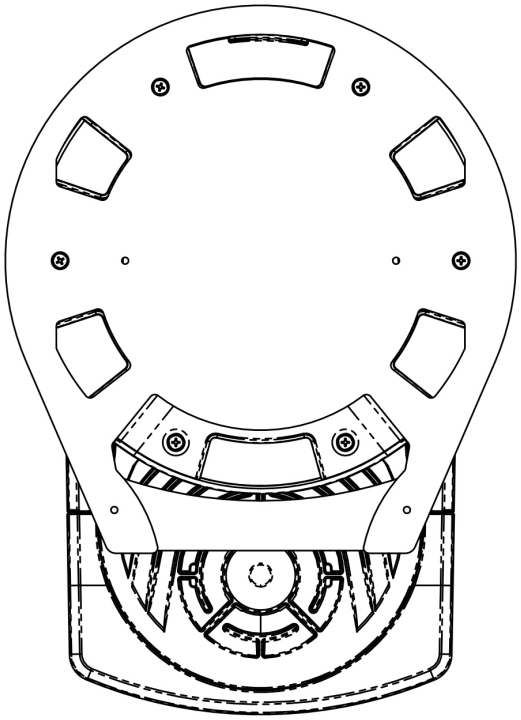

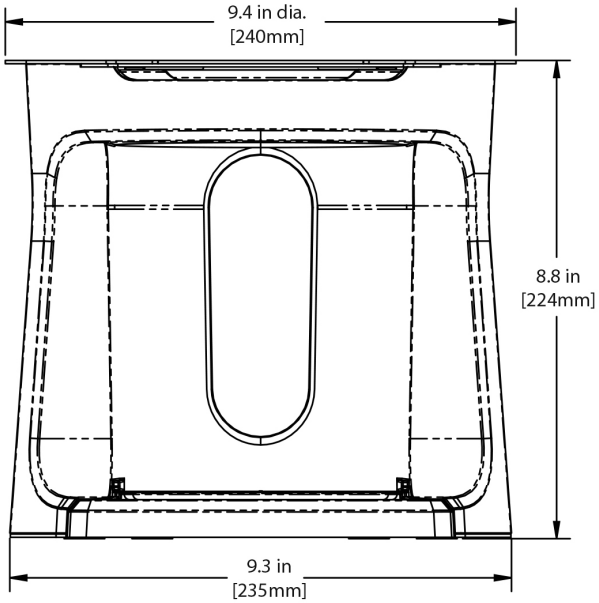

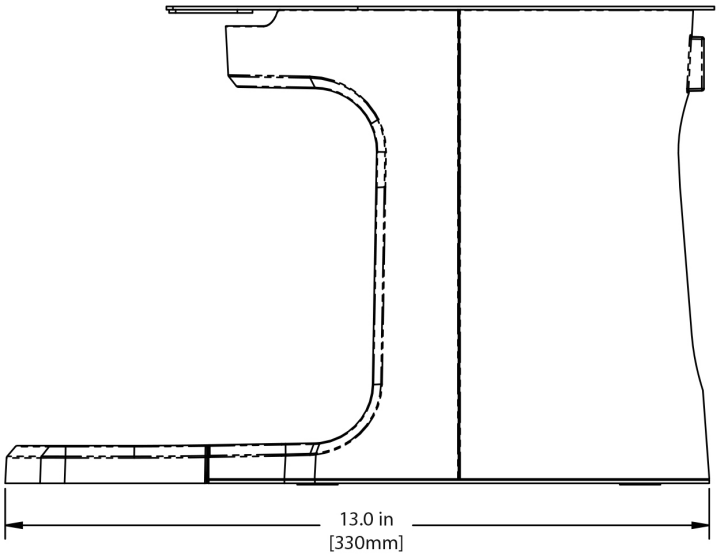

	Unit			Shipping				
	Height	**Width**	**Depth**	**Height**	**Width**	**Depth**	**Weight**	**Volume**
English	9.7 in.	9.1 in.	12.9 in.	11.6 in.	11.9 in.	13.6 in.	5.950 lbs	1.088 ft³
Metric	24.6 cm	23.1 cm	32.8 cm	29.5 cm	30.2 cm	34.6 cm	2.699 kgs	0.031 m³

BUNN® reserves the right to change specifications and product design without notice. Such revisions do not entitle the buyer to corresponding changes, improvements, additions or replacements for previously purchased equipment. For most current specifications and other info visit bunn.com.

Last Updated: 09/03/2026

Related Products & Accessories: STAND ASSY, TF SERVER GEN3(39795.0200)

TF SERVER, 1G DSG GEN3	TF SERVER, 1.5G DSG GEN3	TF SERVER, 1G MECH GEN3	TF SERVER, 1.5G MECH GEN3
Product #: 42700.0200[1]	Product #: 42750.0200[1]	Product #: 44000.0200[1]	Product #: 44050.0200[1]

[1]NSF Certified [2]NSF Certified with spec sheet model listed [3]NSF Certified under Solventum Purification [4]NSF Certified under Vivreau Ltd [5]NSF Certified under Zojirushi [6]NSF Certified under Qins Inc [7]NSF COMPONENT Certified

BUNN® reserves the right to change specifications and product design without notice. Such revisions do not entitle the buyer to corresponding changes, improvements, additions or replacements for previously purchased equipment. For most current specifications and other info visit bunn.com.

Last Updated: 09/03/2026

WELBILT®

an Ali Group Company