DUAL® SH DBC®

W/SMART FUNNEL®

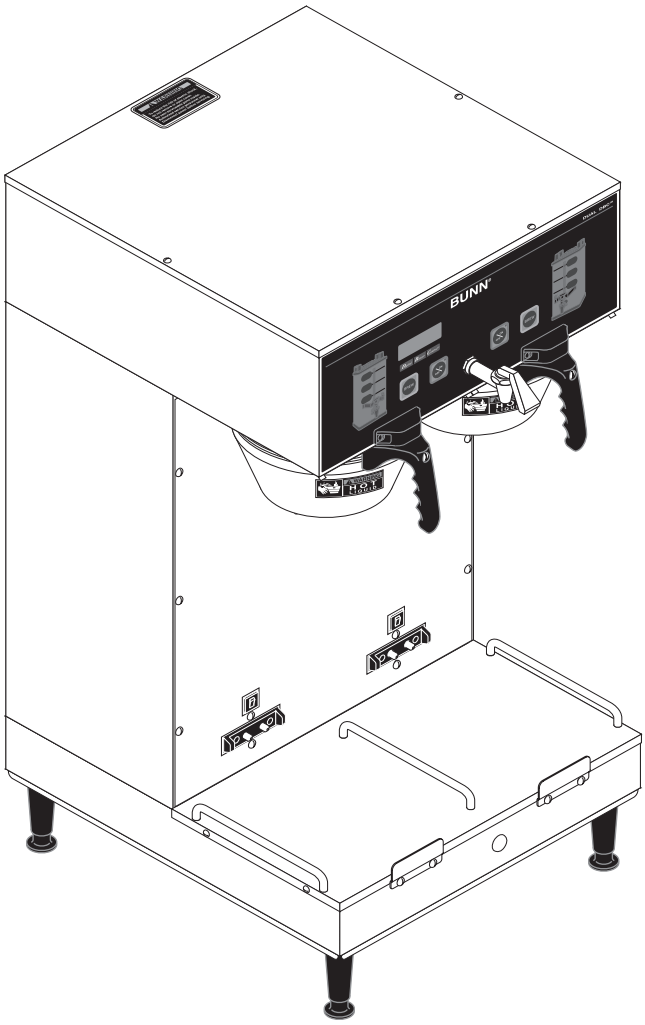

ILLUSTRATED PARTS CATALOG

Designs, materials, weights, specifications, and dimensions for equipment or replacement parts are subject to change without notice.

BUNN-O-MATIC CORPORATION

POST OFFICE BOX 3227
SPRINGFIELD, ILLINOIS 62708-3227
PHONE: (217) 529-6601 FAX: (217) 529-6644

To ensure you have the latest revision of the Operating Manual, Illustrated Parts Catalog, Programming Manual, or Service Manual, please visit the Bunn-O-Matic website, at www.bunn.com. This is absolutely FREE, and the quickest way to obtain the latest catalog and manual updates. For Technical Service, contact Bunn-O-Matic Corporation at 1-800-286-6070.

29878.0000 R 08/02/24 ©2016 Bunn-O-Matic Corporation

BUNN-O-MATIC COMMERCIAL PRODUCT WARRANTY

Warranty statements and information can be found on our website. Please visit https://commercial.bunn.com/support/warranty-lookup for further details.

TABLE OF CONTENTS

Base - Trunk - Hood - Covers & Panels 4
Electrical Controls 22
Faucet 20
Funnel 28
Numerical Index 30
Sprayhead Valve and Sprayhead 18
Solenoid & Lines (Brewers with backflow prevention) 14
Strainer, Solenoid & Lines (Brewers without backflow prevention) 12
Tank, Mounting Brackets and Drain 10
Tank Heater & Overflow Protection Devices 8
Water By-Pass 16

To search this document electronically, press “control” + “F” (on P.C.) or “command” + “F” on Mac, then type in description or part number, press “enter”.

BASE - TRUNK - HOOD - COVERS & PANELS

DUAL SH DBC

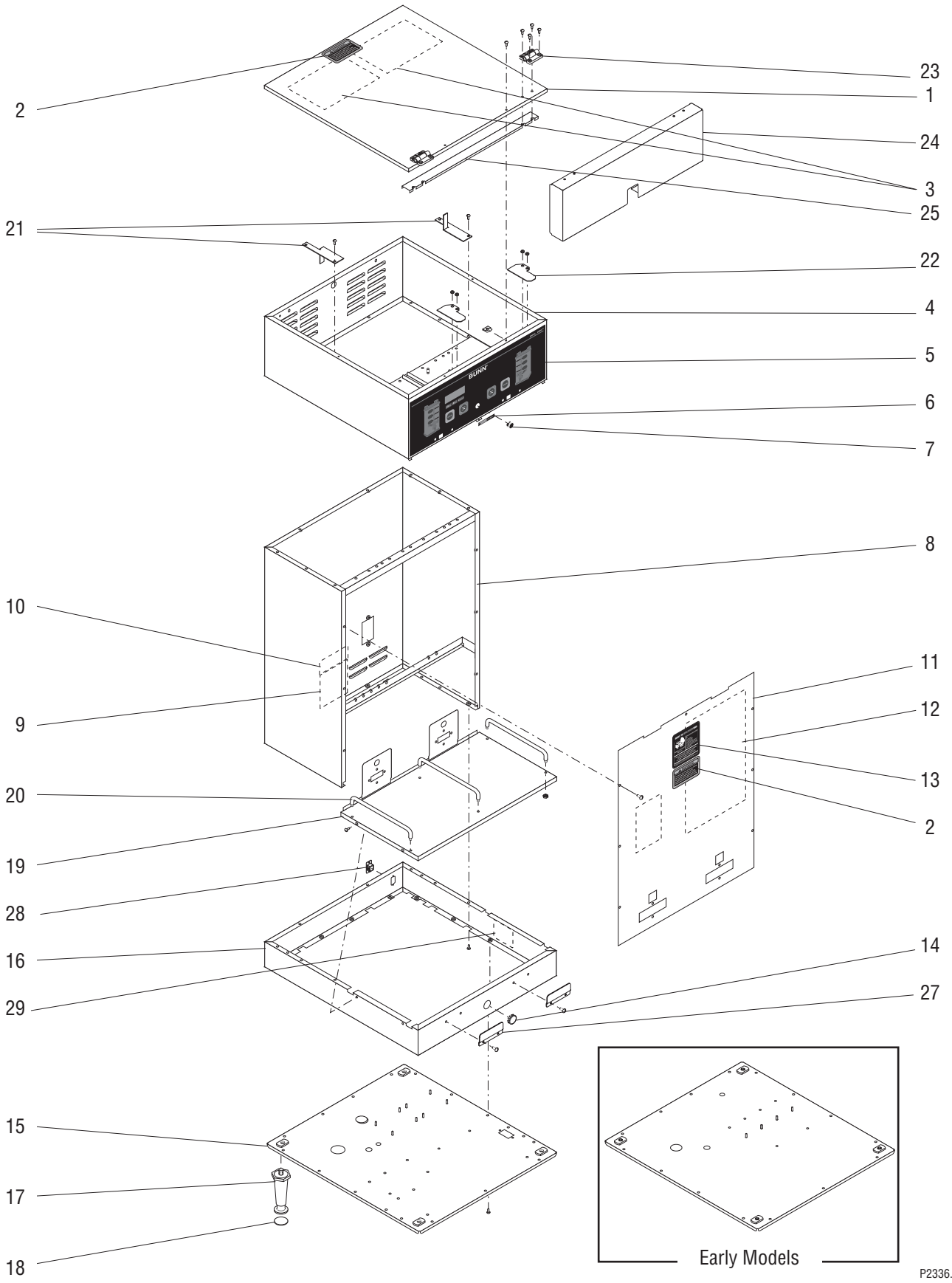

BASE - TRUNK - HOOD - COVERS & PANELS

ITEM	PART NO.	QTY.	DESCRIPTION
1	20921.1000	1	Cover Assy, Top SST (Includes item 2 & 3)
	25376.0002	1	Cover Assy, Top BLK (Includes item 2 & 3)
	20921.1003	1	Cover Assy, Top (Includes items 2 & 3) (Models with Panel Guard)
	02336.0000	4	Screw, Truss Head SST #4 - 40 x .38"
	02336.0002	4	Screw, Truss Head BLK #4 - 40 x .38"
	00916.0000	4	Clip, J-Type #4-40
2	37881.0000	2	Decal, No Serviceable Parts
3	25151.0000	2	Shield, Insulator
4	35388.1004	1	Hood W/Decals SST (Includes items 5, 6 & 7)
	35388.1005	1	Hood W/Decals BLK (Includes items 5, 6 & 7)
	02308.0000	16	Screw, Pn-Hd #8 - 32 x .375"
5	29974.0000	1	Switch, Membrane (Models W/Upper Faucet)
	29974.0006	1	Switch, Membrane (Models W/Lower Faucet)
6	20201.5600	1	Decal, Caution Hot Water (Early models)
7	05749.0004	1	Plug, Hole .50" Dia. (Early models W/Lower Faucet)
8	29889.1000	1	Trunk W/Decals SST (Includes items 9 & 10) (Models W/External Heat Sink)
	29889.1001	1	Trunk W/Decals BLK (Includes items 9 & 10) (Models W/External Heat Sink)
	26835.1000	1	Trunk W/Decals SST (Includes items 9 & 10) (Models W/Internal Heat Sink)
9	00986.0000	1	Decal, Warning - Electrical
10	00656.0001	1	Decal, Comply to Plumbing Code
11	27761.1002	1	Panel W/Decals, Trunk SST, 120/208V & 120/240V
	27761.1001	1	Panel W/Decals, Trunk BLK, 120/208V & 120/240V
	27761.1003	1	Panel W/Decals, Trunk SST, 230V (Brewers without Backflow Prevention)
		1	Panel W/Decals, Trunk SST, 230V (Brewers with Backflow Prevention)
	27761.1005	1	Panel W/Decals, Trunk SST, 200V
	01382.0003	11	Screw, Truss Head SST #6 - 32 x .375"
	01382.0007	11	Screw, Truss Head BLK #6 - 32 x .375"
12	29876.0015	1	Schematic, 120/240V
	29876.0001	1	Schematic, 230V (Brewers without Backflow Prevention)
	29876.0012	1	Schematic, 230V (Brewers with Backflow Prevention)
	29876.0017	1	Schematic, 200V
	29876.0009	1	Schematic, 200V (Brewers with Product #33500.0027 only)
13	00658.0000	1	Decal, Caution - Decanter/Funnel
14	00619.0007	1	Plug, Hole .50" Dia SST
	00669.0002	1	Plug, Hole .50" Dia BLK
15	27765.0000*	1	Cover, Bottom SST, 120/208V & 120/240V Brewers
	27765.0001*	1	Cover, Bottom BLK, 120/208V & 120/240V Brewers
	27765.0003*	1	Cover, Bottom SST, 120/208V (Brewers w/optional Tank Drain)
	27765.0006*	1	Cover, Bottom SST, 230V Brewers
	35793.0001*	1	Cover, Bottom SST, 200V Brewers
	38936.0000	1	Cover, Bottom SST, 120/208V & 120/240V Brewers
	38936.0007	1	Cover, Bottom SST, 120/208V & 120/240V Brewers (Models with Main Power Switch)
	38936.0001	1	Cover, Bottom BLK, 120/208V & 120/240V Brewers
	38936.0009	1	Cover, Bottom BLK, 120/208V & 120/240V Brewers (Models with Main Power Switch)
	38936.0002	1	Cover, Bottom SST, 120/208V (Brewers w/optional Tank Drain)

Includes items 2, 12 & 13

Early models Order item 30

(continued)

* Indicates the part number listed is for reference only. See DESCRIPTION for possible service replacement.

BASE - TRUNK - HOOD - COVERS & PANELS

DUAL SH DBC

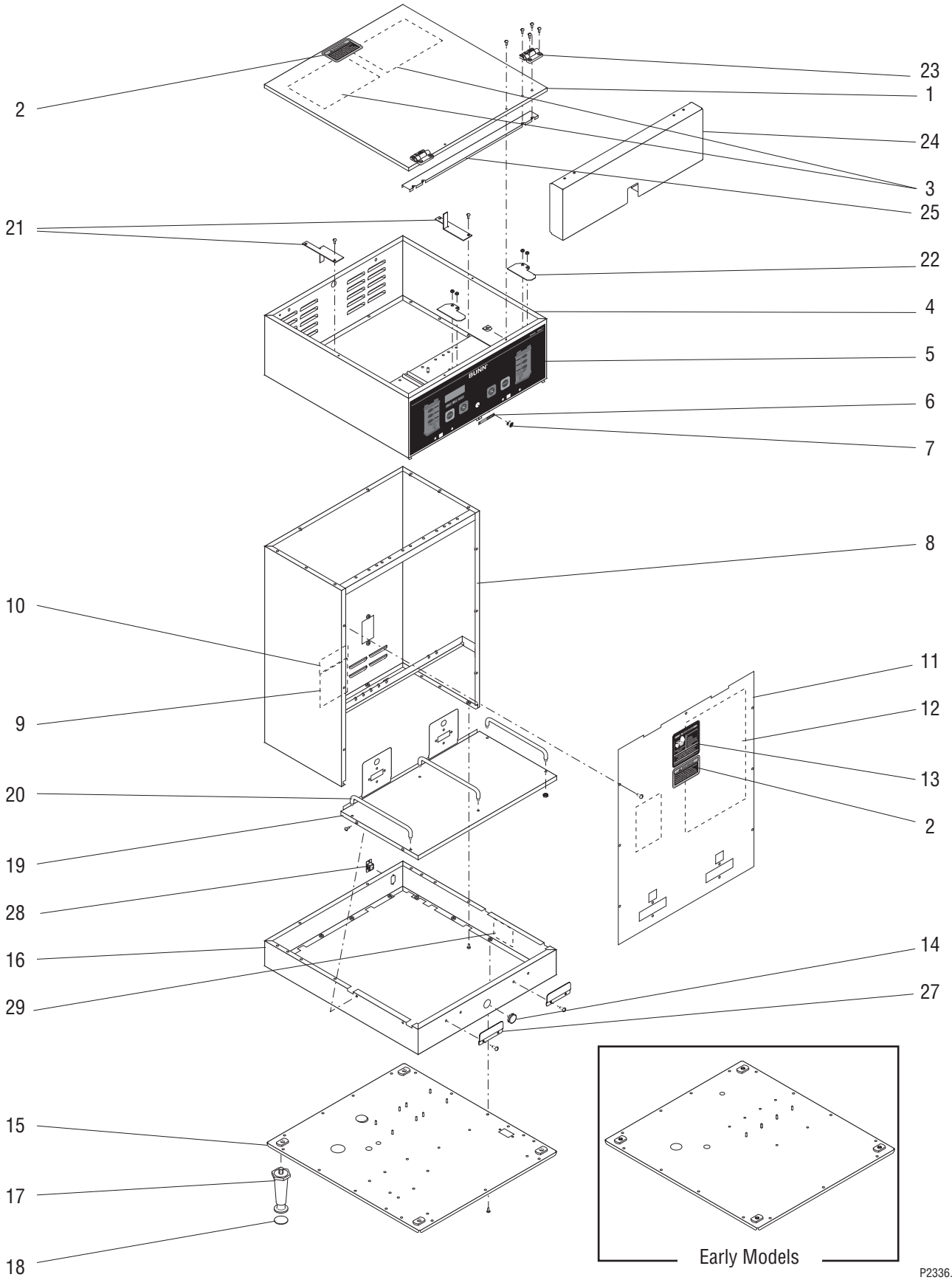

BASE - TRUNK - HOOD - COVERS & PANELS

ITEM	PART NO.	QTY.	DESCRIPTION
	38936.0003	1	Cover, Bottom SST, 230V (Brewers without Backflow Prevention)
	38936.0011	1	Cover, Bottom SST, 230V (Brewers with Backflow Prevention)
	38936.0005	1	Cover, Bottom SST, 200V Brewers
	02308.0000	15	Screw, Pan Head #8 - 32 x .375"
16	35334.0000	1	Base Housing SST,120/208V & 120/240V
	35334.0001	1	Base Housing BLK,120/208V & 120/240V
	35334.0002	1	Base Housing SST, 230V
	02308.0000	8	Screw, Pan Head #8 - 32 x .375"
17	00502.0000	4	Leg, 4.0" SST Adjustable — See item 26
	26528.0000	4	Leg, 4.0" Plastic
18	03996.0000	4	Pad, Anti Skid
19	27760.0002	1	Cover, Server Platform SST
	27760.0004	1	Cover, Server Platform BLK
	01382.0003	4	Screw, Truss Head SST #6 - 32 x .375"
	01382.0007	4	Screw, Truss Head BLK #6 - 32 x .375"
20	12249.0001	3	Guide Rail SST
	12249.0007	3	Guide Rail BLK
	00970.0000	6	Nut, Keps #8 - 32
21	26949.0001	2	Bracket, Tank Supporting
22	32649.0000	2	Plate — Models without Funnel Locks
	00970.0000	4	Nut, Keps #8-32
23	26504.0000	2	Hinge, Panel Guard — Optional
	01382.0003	8	Screw, Truss Head w/Nylon Patch #6-32 x .38"
24	32323.0003	1	Guard, Panel
25	29384.0000	1	Bracket, Hinge Support
26	13255.0003	-	Leg Kit, Plastic (Includes 4 each of items 17 & 18) (Not illustrated)
	13255.0002	-	Leg Kit, SST (Includes 4 each of items 17 & 18) (Not illustrated)
27	21537.0001	2	Plate, Server Stop SST
	21537.0003	2	Plate, Server Stop BLK
	01347.0000	4	Screw, Truss Head SST #6-32 x .38"
	01347.0002	4	Screw, Truss Head BLK #6-32 x .38"
28	36398.0000	1	Hole Plug, DB-9 (Early models)
29	39803.0000	1	Decal, Main Switch (Models with Main Power Switch only)
30	38936.1001	1	Bottom Cover Kit, BLK — Includes necessary components to relocate the Transformers
	38936.1005	1	Bottom Cover Kit, SST
31	50417.0000	1	Switch Cover Kit (Kit Items 1, 2, 3, 23, 24 & 25)

* Indicates the part number listed is for reference only. See DESCRIPTION for possible service replacement.

TANK HEATER & OVERFLOW PROTECTION DEVICES

DUAL SH DBC

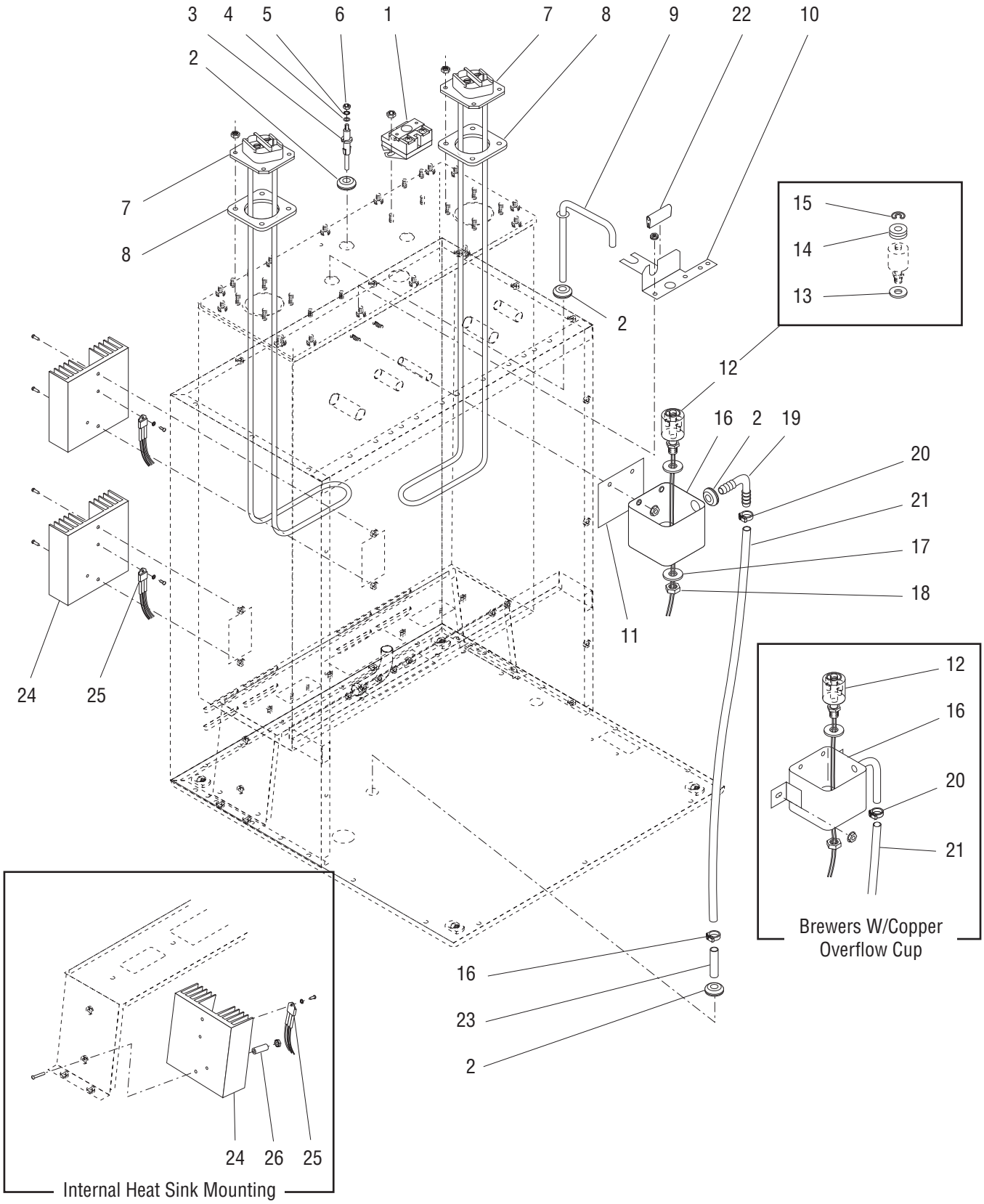

P2337.50

TANK HEATER & OVERFLOW PROTECTION DEVICES

ITEM	PART NO.	QTY.	DESCRIPTION
1	23717.0003	2	Thermostat, Limit
	00908.0000	4	Nut, Hex #8 - 32
2	02536.0000	4	Grommet .375" I.D.
3	20936.1000	1	Probe Kit (Includes items 4, 5 & 6)
4	01501.0000	1	Washer .164" I.D. x .375" O.D.
5	20203.0100	1	Lockwasher, Internal Tooth #8
6	00908.0000	1	Nut, Hex #8 - 32
7	12305.1000	2	Tank Heater, 4000W @ 208V (Includes item 8)
	20922.1000	2	Tank Heater, 3300W @ 240V (Includes item 8)
	20922.1002	2	Tank Heater, 2850W @ 208V, 3795W @ 240V (Includes item 8)
	00908.0000	8	Nut, Hex #8 - 32
8	12398.0002	2	Gasket, Tank Heater
9	26622.0001	1	Tube Assy, Vent
10	27473.0000	1	Bracket, Overflow Cup Mounting
11	41266.0000	1	Film, Insulating
12	03803.0000	1	Switch Assy, Liquid Level, 120V (Includes items 13, 14 & 15)
	03803.0002	1	Switch Assy, Liquid Level, 230V (Includes items 13, 14 & 15)
13	03633.0000	2	Gasket, Float Switch (Only 1 used in this application)
14	- - - - - - - -	3	Washer, Adjusting (**DO NOT USE IN THIS APPLICATION**)
15	03807.0000	1	Clip, Spring
16	41259.1003	1	Kit, Overflow Cup (Aluminum) (Includes items 2,11, 17 &19)
	22728.0000	1	Overflow Cup Assy (Copper) (Also replaces aluminum cup)
	00971.0000	2	Nut, Keps #10 - 32
17	04797.0000	1	Washer, Celcon .520” I.D. x 1.0” O.D.
18	00946.0000	1	Nut, Hex .125” FPT
19	41280.0001	1	Elbow,.375” Multi Barb
20	12422.0000	2	Clamp, Hose .47"/.54" I.D.
21	03236.0007*	1	Tube, Silicone .312" I.D. x 29" (Order item 29)
22	02434.0010*	1	U-Channel 2.0" (Order item 28)
23	21801.0002	1	Tube .375" O.D.
24	20541.0001	2	Heat Sink (Also order item 27)
	01382.0007	4	Screw, Truss Head 6-32 x .38" (External Heat Sink)
	35477.0000	4	Screw, Round Head 6-32 x 2.50" (Internal Heat Sink)
25	12565.0028	2	Triac Assy, 40 amp, 120V
	12565.0029	2	Triac Assy, 40 amp, 200V
	12565.0013	2	Triac Assy, 40 amp, (Early 230V Brewers with Thermal Fuzes)
	02328.0003	2	Screw, Pan Head #6-32 x .312"
	01520.0000	2	Lockwasher #6
26	35476.0000	4	Spacer, 1.50" (Internal Heat Sink only)
27	M2522.1000	-	Heat Sink Compound
28	02434.1000	-	U-Channel 18.0" (Use as required)
29	03236.1001	-	Tube, Silicone .312" I.D. x 36.0"
	03236.1003	-	Tube, Silicone .312" I.D. x 60.0"
	03236.1002	-	Tube, Silicone .312" I.D. x 120.0"
30	03851.0000	2	Wire Nut (Not used on 230V models)

Not illustrated

* Indicates the part number listed is for reference only. See DESCRIPTION for possible service replacement.

TANK, MOUNTING BRACKETS AND DRAIN

DUAL SH DBC

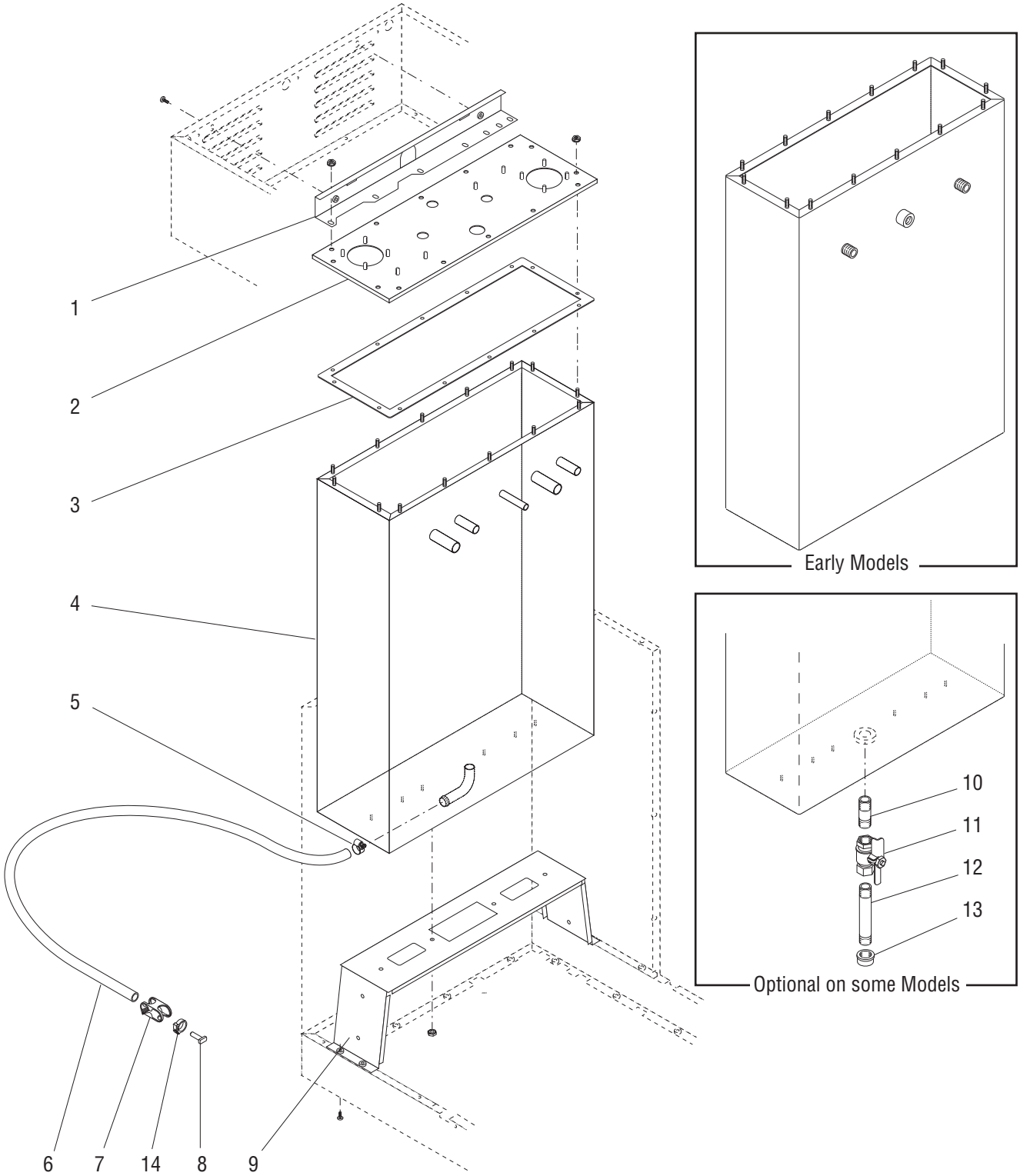

P1043.40

TANK, MOUNTING BRACKETS AND DRAIN

ITEM	PART NO.	QTY.	DESCRIPTION
1	26826.0000*	1	Bracket, Tank Support (Top) (Early models. Not available rder Late Model Bracket)
	37526.0000	1	Bracket, Tank Support (Top) (Late models)
	01317.0003	2	Screw, Truss Head SST #8 - 32 x .375” LKG
	01315.0006	2	Screw, Truss Head BLK #8 - 32 x .375” LKG
	00908.0000	2	Nut, Hex #8 - 32 (2 additional used on early models)
2	20881.0001	1	Lid, Tank
	00908.0000	14	Nut, Hex #8 - 32
3	20883.0000	1	Gasket, Tank
4	20951.1000	1	Tank (Early models)
	42109.1001	1	Tank (Late models)
5	29421.0000	1	Clamp, Hose-Worm Drive .625"/.75"
6	32591.0011*	1	Tube, Silicone .50" I.D. x 36" LG (Order item 15)
7	11630.0002	1	Clamp Shut Off, Tube
8	35086.0000	1	Plug, .50" I.D. Hose
9	26829.0000	1	Bracket, Tank Mounting (Bottom)
	00971.0000	4	Nut, Keps #10 - 32
	02308.0000	4	Screw, Pan Head #8 - 32 x .375"
10	32242.0000	1	Nipple, Brass 2.0"
11	35439.1000	1	Valve, Ball Shut-off
12	32242.0002	1	Nipple, Brass 5.0"
13	32241.0000	1	Cap
14	12422.0005	1	Clamp, Hose - Snap Type .62/.71 I.D.
15	32591.1002	-	Tube, Silicone .50" I.D. x 36.0" LG

Optional

* Indicates the part number listed is for reference only. See DESCRIPTION for possible service replacement.

STRAINER, SOLENOID & LINES (BREWERS WITHOUT BACKFLOW PREVENTION)

DUAL SH DBC

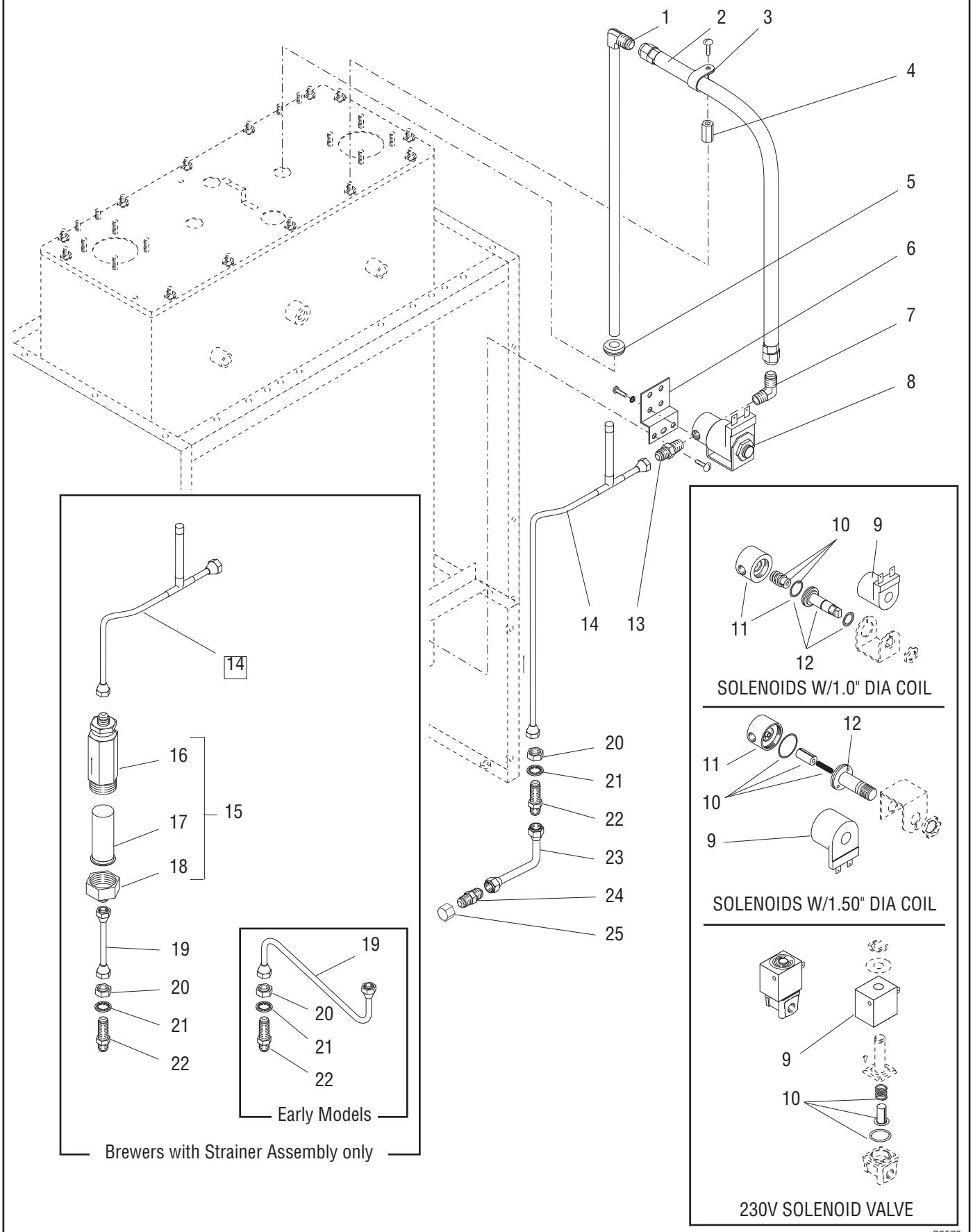

STRAINER, SOLENOID & LINES
(BREWERS WITHOUT BACKFLOW PREVENTION)

ITEM	PART NO.	QTY.	DESCRIPTION
1	20937.0000	1	Tube, Tank Fill
2	20977.1000	1	Hose Assy, Solenoid to Tank
3	00620.0000	1	Clamp, Hose Retaining
	02308.0000	1	Screw, Pan Head #8 - 32 x .375"
4	00950.0000	1	Spacer, Hose Clamp
5	02536.0000	1	Grommet .375" I.D.
6	20201.4301	1	Bracket, Solenoid Mounting, 120/208V & 120/240V
	02308.0000	2	Screw, Pan Head #8 - 32 x .375"
	28309.0000	1	Bracket, Solenoid Mounting, 230V
	02329.0000	2	Screw, Pan Head #8 - 32 x .312"
7	00400.0001	1	Elbow, Male .250" Flare x .125" MPT
8	01085.0000	1	Solenoid Valve Assy, 120V - 1.48" Dia Coil (Without Inlet Screen)
	01085.1006	1	Solenoid Valve Assy, 120V - 1.48" Dia Coil (With Inlet Screen)
	01085.0002	1	Solenoid Valve Assy, 120V - 1.0" Dia Coil
	21180.0001	1	Solenoid Valve Assy 200V - 1.50" Dia Coil
	01975.0000	1	Solenoid Valve Assy 230V - 1.50" Dia Coil (Late models) (Without Inlet Screen)
	01085.1007	1	Solenoid Valve Assy, 230V - 1.48" Dia Coil (With Inlet Screen)
	01327.0000	2	Screw, Pan Head #10 - 32 x .375"
	01502.0000	2	Lockwasher, Split #10
	28005.0000	1	Solenoid Valve Assy 230V (Includes items 7 & 8) (Early models)
	01315.0000	2	Screw, Truss Head #8 - 32 x .38"
	01519.0000	2	Lockwasher, Split #8
9	01101.0000	1	Solenoid Valve Coil, 120V - 1.50" Dia
	28480.0000	1	Solenoid Valve Coil, 120V - 1.0" Dia
	21181.0000	1	Solenoid Valve Coil, 200V
	28020.0000	1	Solenoid Valve Coil, 230V (Early models)
	01100.0000	1	Solenoid Valve Coil, 230V (Late models)
10	01111.0000	1	Solenoid Valve Repair Kit - 1.50" Dia Coil (Includes Plunger, Seal and Spring)
	01111.0002	1	Solenoid Valve Repair Kit - 1.0" Dia Coil (Includes Plunger, Spring and O-ring)
	28021.0000	1	Solenoid Valve Repair Kit, 230V (Early models)
11	01079.0000	1	Solenoid Valve Base - 1.50" Dia Coil (Without Screen)
	28479.0000	1	Solenoid Valve Base Kit - 1.0" Dia Coil (Includes O-ring)
12	01116.0000	1	Guide - 1.50" Dia Coil
	28481.0000	1	Guide Kit - 1.0" Dia Coil
13	00402.0001	1	Connector .250" Flare x .125" MPT
14	25134.0000	1	Tube Assy, Flow Control to Solenoid (Brewers with Strainer Assy)
	25134.0001	1	Tube Assy, Flow Control to Solenoid (Brewers without Strainer Assy)
15	23820.1000	1	Strainer Assy (Includes items 16 thru 18)
16	- - - - - - - -	1	Body (Not Available order item 15)
17	23721.0000	1	Screen
18	22249.0000	1	End Cap, Water Strainer
19	27083.0000	1	Tube Assy, Bulkhead to Flow Control (Early models)
	38949.0000	1	Tube Assy, Bulkhead to Strainer (Late models)
20	00463.0000	1	Nut, Hex .438" - 20
21	01532.0000	1	Lockwasher, Internal Tooth .438" I.D.
22	00459.0000	1	Bulkhead Fitting .250" Flare
23	00310.0002	1	Tube Assembly, Bulkhead to Supply
24	00436.0001	1	Union .250" Male Flare
25	00935.0000	1	Cap (For shipping purposes only)

Brewers with Strainer Assy only

* Indicates the part number listed is for reference only. See DESCRIPTION for possible service replacement.

SOLENOID & LINES
(BREWERS WITH BACKFLOW PREVENTION)

DUAL SH DBC

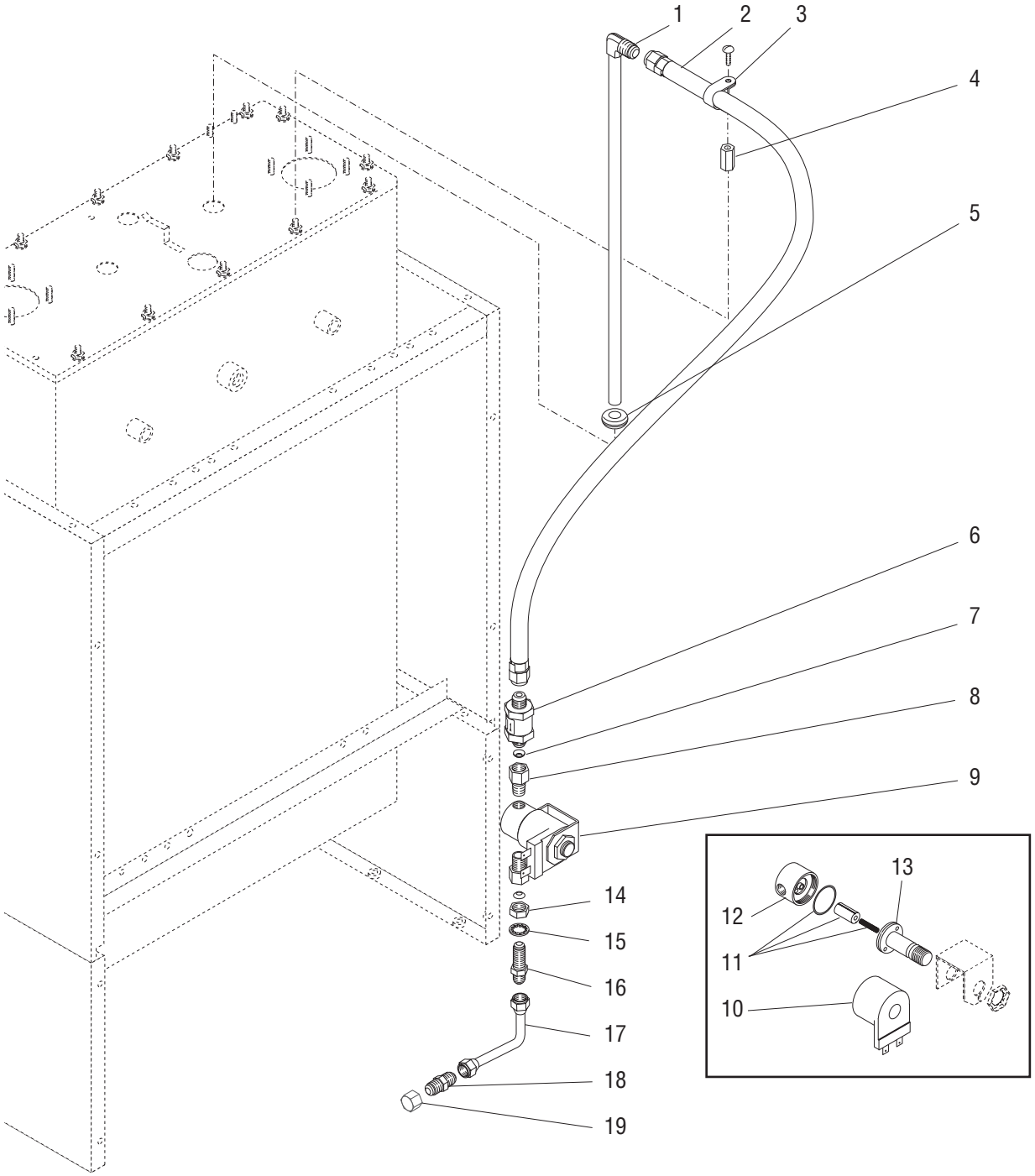

SOLENOID & LINES
(BREWERS WITH BACKFLOW PREVENTION)

ITEM	PART NO.	QTY.	DESCRIPTION
1	20937.0000	1	Tube, Tank Fill
2	20977.1002	1	Hose Assy, Solenoid to Tank
3	00620.0000	1	Clamp, Hose Retaining
	02308.0000	1	Screw, Pan Head #8 - 32 x .375"
4	00950.0000	1	Spacer, Hose Clamp
5	02536.0000	1	Grommet .375" I.D.
6	01171.0001	1	Check Valve
7	24684.0000	2	Gasket
8	24613.0001	2	Adapter, .250" FFL x .125" MPT
9	01085.1007	1	Solenoid Valve Assy, 230V - 1.48" Dia Coil (With Inlet Screen)
	01327.0000	2	Screw, Pan Head #10 - 32 x .375"
	01502.0000	2	Lockwasher, Split #10
10	01100.0000	1	Solenoid Valve Coil, 230V
11	01111.0000	1	Solenoid Valve Repair Kit - 1.50" Dia Coil (Includes Plunger, Seal and Spring)
12	01079.0000	1	Solenoid Valve Base - 1.50" Dia Coil (Without Screen)
13	01116.0000	1	Guide - 1.50" Dia Coil
14	00463.0000	1	Nut, Hex .438" - 20
15	01532.0000	1	Lockwasher, Internal Tooth .438" I.D.
16	00459.0000	1	Bulkhead Fitting .250" Flare
17	00310.0002	1	Tube Assembly, Bulkhead to Supply
18	00436.0001	1	Union .250" Male Flare
19	00935.0000	1	Cap (For shipping purposes only)

* Indicates the part number listed is for reference only. See DESCRIPTION for possible service replacement.

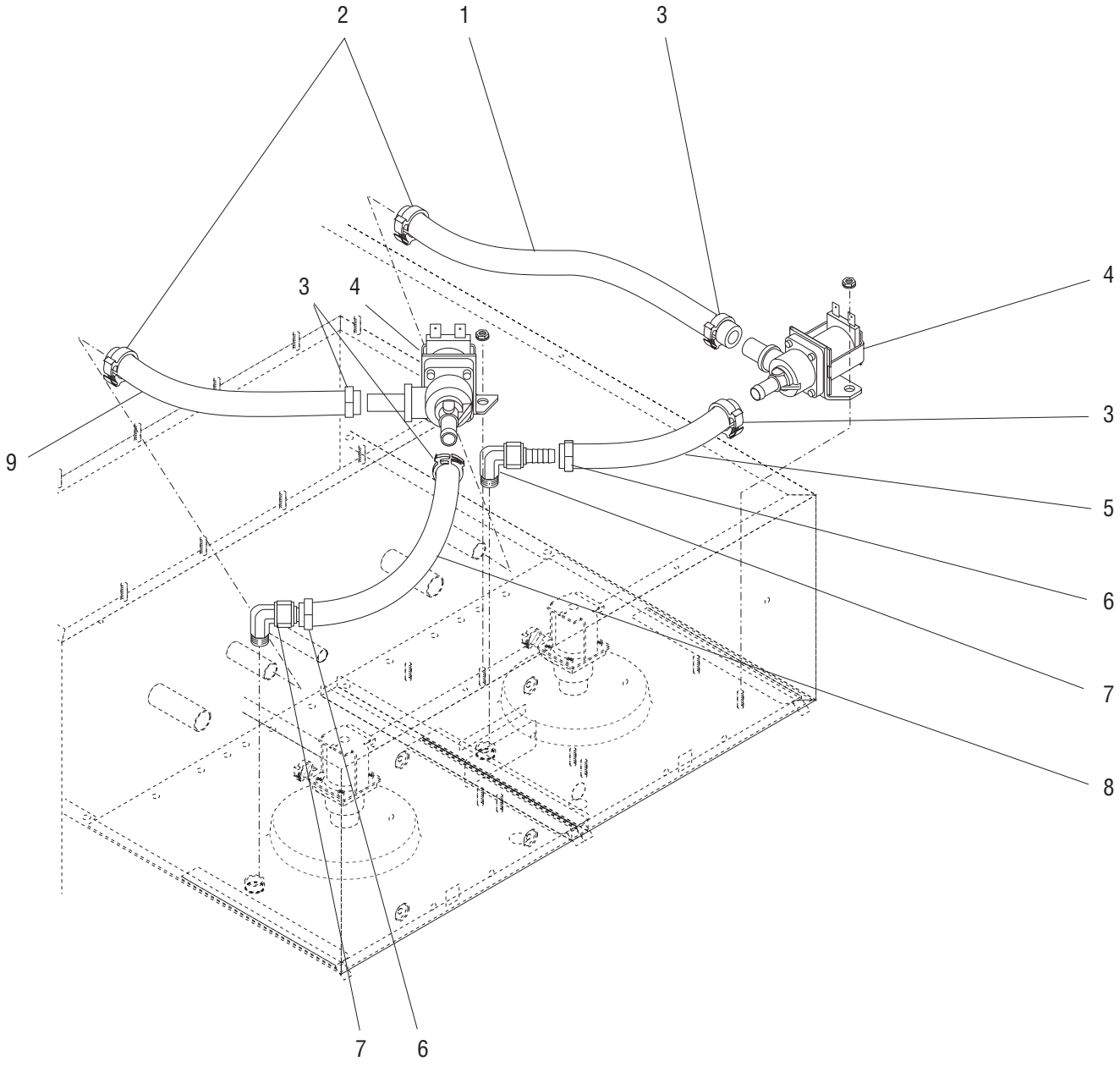

P3284.75

WATER BY-PASS

ITEM	PART NO.	QTY.	DESCRIPTION
1		1	Tube, Silicone .375" I.D. x 9.5" (Order item 10) (Early model Tank)
		1	Tube, Silicone .50" I.D. x 8.75" (Order item 11) (Late model Tank)
2	12422.0005	2	Clamp, Hose .62”/.71” I.D.
3	12422.0005	4	Clamp, Hose .62”/.71” I.D.
4	27370.0000	2	Valve Assy, By-Pass 120/208V & 120/240V models
	27370.0001	2	Valve Assy, By-Pass 200V models
	27370.0002	2	Valve Assy, By-Pass 230V models
	00970.0000	4	Nut, Keps #8 - 32
5		1	Tube, Silicone .375" I.D. x 4.5" (Order item 10) (Early model Tank)
		1	Tube, Silicone .375" I.D. x 4.25" (Order item 10) (Late model Tank)
6	12422.0001	2	Clamp, Hose .59"/.66" I.D.
7	32648.0000	2	Elbow, Compression
8		1	Tube, Silicone .375" I.D. x 10.50" (Order item 10) (Early model Tank)
		1	Tube, Silicone .375" I.D. x 9.25" (Order item 10) (Late model Tank)
9		1	Tube, Silicone .375" I.D. x 6.50" (Order item 10) (Early model Tank)
		1	Tube, Silicone .50" I.D. x 5.25" (Order item 11) (Late model Tank)
10	20976.1000	-	Tube, Silicone .375" I.D. x 12.0"
	20976.1001	-	Tube, Silicone .375" I.D. x 36.0"
	20976.1002	-	Tube, Silicone .375" I.D. x 120.0"
11	32591.1000	-	Tube, Silicone .50" I.D. x 36.0"

Not illustrated

* Indicates the part number listed is for reference only. See DESCRIPTION for possible service replacement.

Early Model Tank

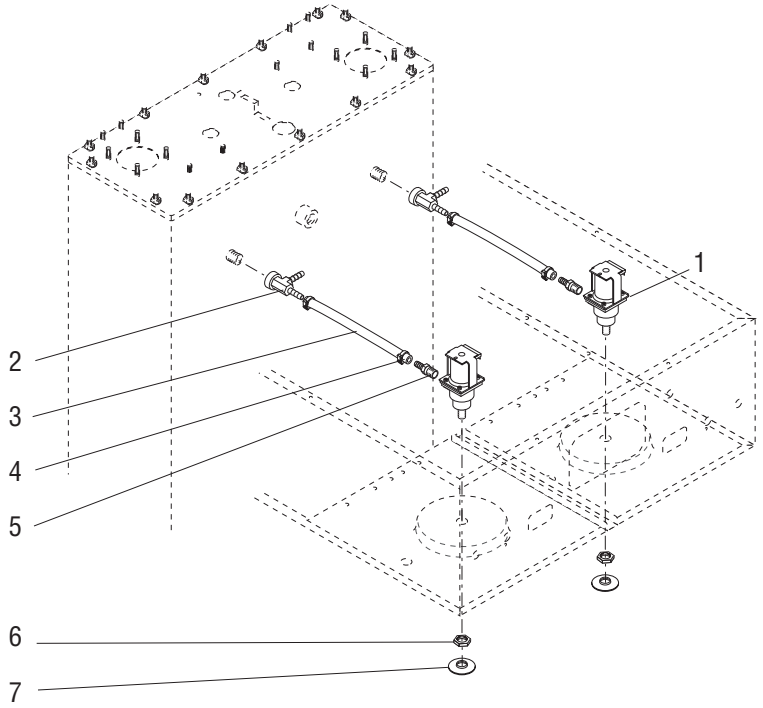

Late Model Tank

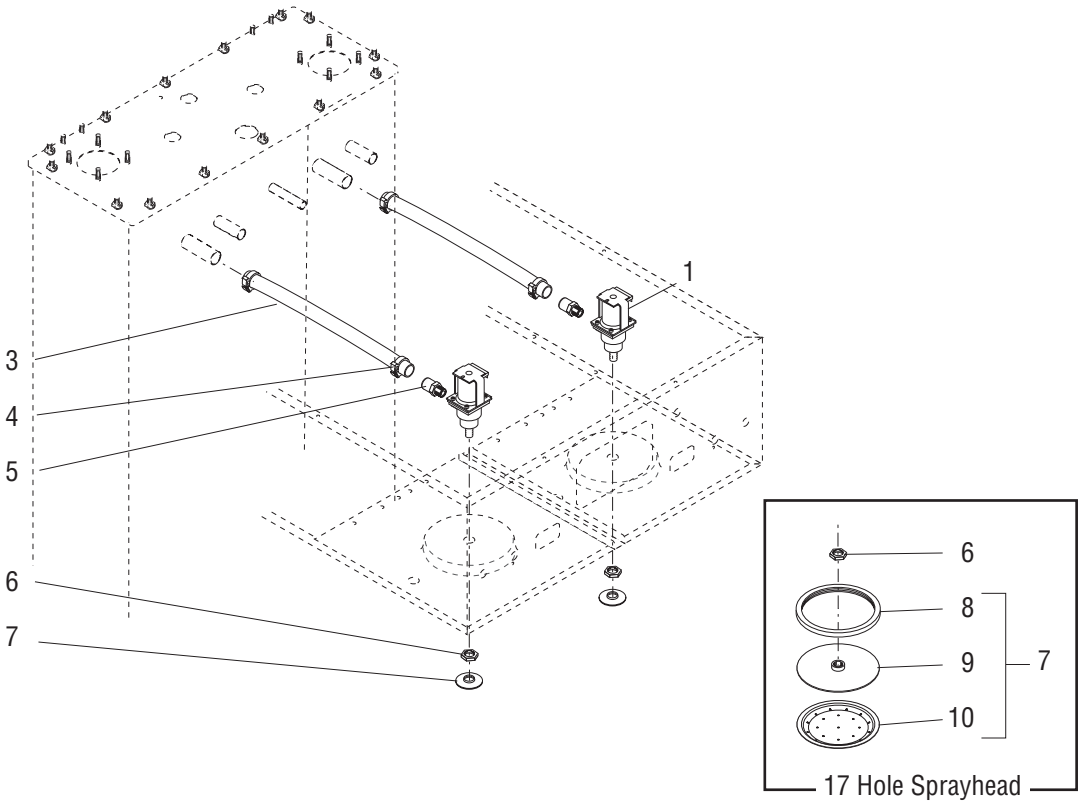

P2224.40

SPRAYHEAD VALVE & SPRAYHEAD

ITEM	PART NO.	QTY.	DESCRIPTION
1	26846.0000	2	Valve Assembly, Sprayhead 120V **(Discontinued, use 56771.0000)**
	26846.0002	2	Valve Assembly, Sprayhead 240V **(Discontinued, use 56771.0002)**
	11517.0008	-	Repair Kit (Includes plunger, spring & diaphragm)
	23255.0000	-	Diaphragm Only
	23254.0000	8	Screw
	23256.0000	2	Spacer Plate
	56771.0000	2	Valve Assembly, Sprayhead 120V
	56771.0002	2	Valve Assembly, Sprayhead 240V
	56815.0000	-	Repair Kit (Includes plunger, spring & diaphragm)
	56816.0000	-	Diaphragm Only
	22305.0001	2	Coil 120VAC (used in both styles)
	22305.0002	2	Coil 240VAC (used in both styles)
2	26924.0000	2	Tee, Run .25" FPT x .38" x .38" Barb (Early model Tank only)
3		2	Tube, Silicone .38" I.D. x 4.5" (Order item 11) (Early model Tank)
		2	Tube, Silicone .75" I.D. x 6.75" (Order item 12) (Late model Tank)
4	12422.0001	4	Clamp, Hose .59"/.66" I. D. (Early model Tank)
	12422.0008	4	Clamp, Hose .93"/1.1" I.D. (Late model Tank)
5	21136.0001	2	Fitting, Barb .375" x .25" MPT (Early model Tank)
	34956.0001	2	Fitting, .25" NPTF .281" I.D. (Models with 6 & 17 hole Sprayhead)
	34956.0000	2	Fitting, .25" NPTF .344" I.D. (Brewer P/N 33500.0024 only) — Late model Tank
	34956.0002	2	Fitting, .25" NPTF .255" I.D. (Brewer P/N 33500.0003 only)
6	01075.0000	2	Nut, Hex .438" - 20
7	01082.0000	2	Sprayhead, 6 Hole (Brewer P/N 33500.0009, 33500.0026 & 33500.0027 only)
	01082.0002	2	Sprayhead, 6 Hole
	01082.0003	2	Sprayhead, 7 Hole (Brewer P/N 33500.0024 only)
	35308.1005	2	Sprayhead Assy, 17 Hole (Includes one each of items 8-10) (Brewer P/N 33500.0014 only)
	35308.1004	2	Sprayhead Assy, 21 Hole (Includes one each of items 8-10) (Brewer P/N 33500.0040 only)
8	34868.0000	2	Seal, Sprayhead
9	35070.0001	2	Sprayhead Back
10	34867.0005	2	Sprayhead (17 hole)
	34867.0004	2	Sprayhead (21 hole)

The following items are not illustrated

11	20976.1000	1	Tube, Silicone .375" I.D. x 12.0"
	20976.1001	1	Tube, Silicone .375" I.D. x 36.0"
	20976.1002	1	Tube, Silicone .375" I.D. x 120.0"
12	35052.1000	1	Tube, Silicone .75" I.D. x 12.0"

* Indicates the part number listed is for reference only. See DESCRIPTION for possible service replacement.

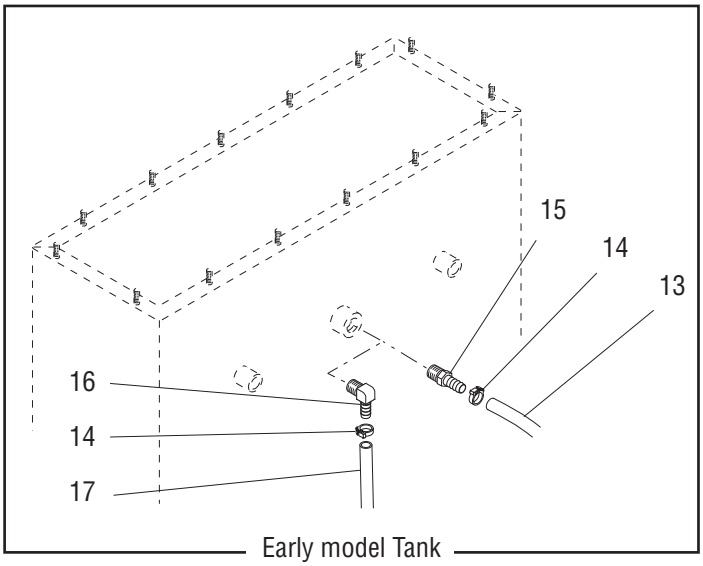

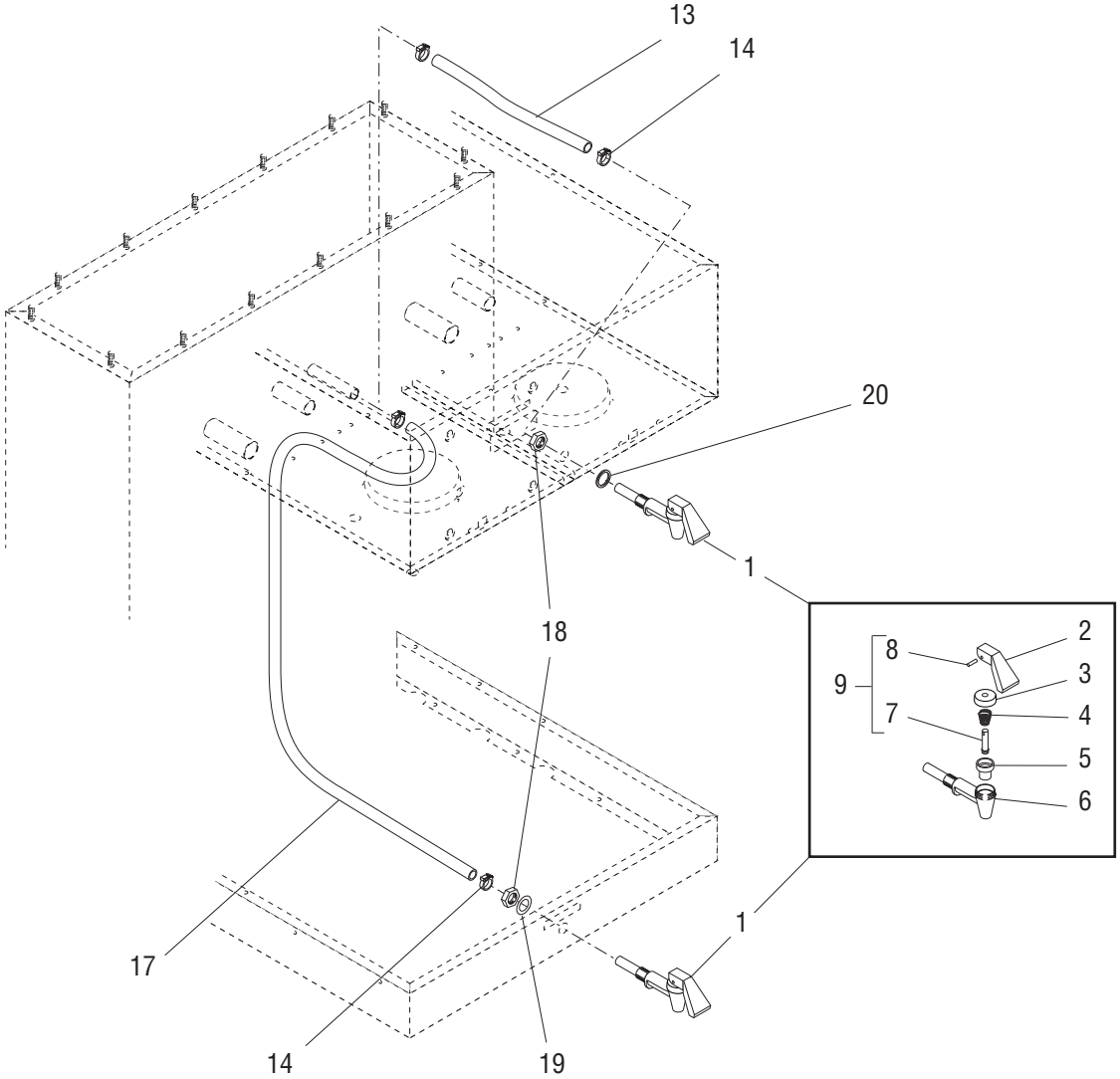

Only one Faucet location option (Upper or Lower) is applicable to each Brewer

P3078.55

FAUCET

ITEM	PART NO.	QTY.	DESCRIPTION	
1	29075.0000	1	Faucet Assy (Includes items 2 thru 8) (Late models)	
2	02861.0103	1	Handle, Faucet “Warning Hot Liquid”	
3	02854.0000	1	Bonnet, Faucet	
4	02595.0000	1	Spring, Faucet	
5	02766.0000	1	Seat Cup, Faucet	
6		1	Body, Faucet (Not available, order item 1)	
7	13054.0000	1	Stem, Faucet	
8	02858.0000	1	Pin, Spring .125" Dia. x .50"	
9	02594.0000	1	Faucet Stem W/Pin (Includes items 7 & 8)	
10		1		
11		1		
12		1		
13	20976.0003*	1	Tube, Silicone .38" I.D. x 10.50" (Order item 21) (Early model Tank)	Upper Faucet models only
	20976.0059*	1	Tube, Silicone .38" I.D. x 11.75" (Order item 21) (Late model Tank)	
14	12422.0001	2	Clamp, Hose .59" x .66" I.D.	
15	21136.0001	1	Fitting, Barb .375" x .25" MPT (Early model Tank only)	
16	20202.1601	1	Elbow, 90° .375" Barb x .25" MPT (Early model Tank only)	
17	20976.0036*	1	Tube, Silicone .38" I.D. x 38.0" (Order item 21) (Early model Tank)	Lower Faucet models only
	20976.0066*	1	Tube, Silicone .38" I.D. x 48.0" (Order item 21) (Late model Tank)	
18	29264.0000	1	Nut, Hex SST .50”	
19	01532.0005	1	Washer, Intl Tooth .50” Lock	
20	01544.0000	1	Washer, SST Intl Tooth .50” Lock (Late models)	
21	20976.1000	1	Tube, Silicone .38" I.D. x 12.0"	Not Illustrated
	20976.1001	1	Tube, Silicone .38" I.D. x 36.0"	
	20976.1002	1	Tube, Silicone .38" I.D. x 120.0"	
22	28706.0002	-	Faucet Kit (Includes items 2,4,5,7 & 8)	
23	M2517.0000	-	Sealant, Pipe 6 ml	

* Indicates the part number listed is for reference only. See DESCRIPTION for possible service replacement.

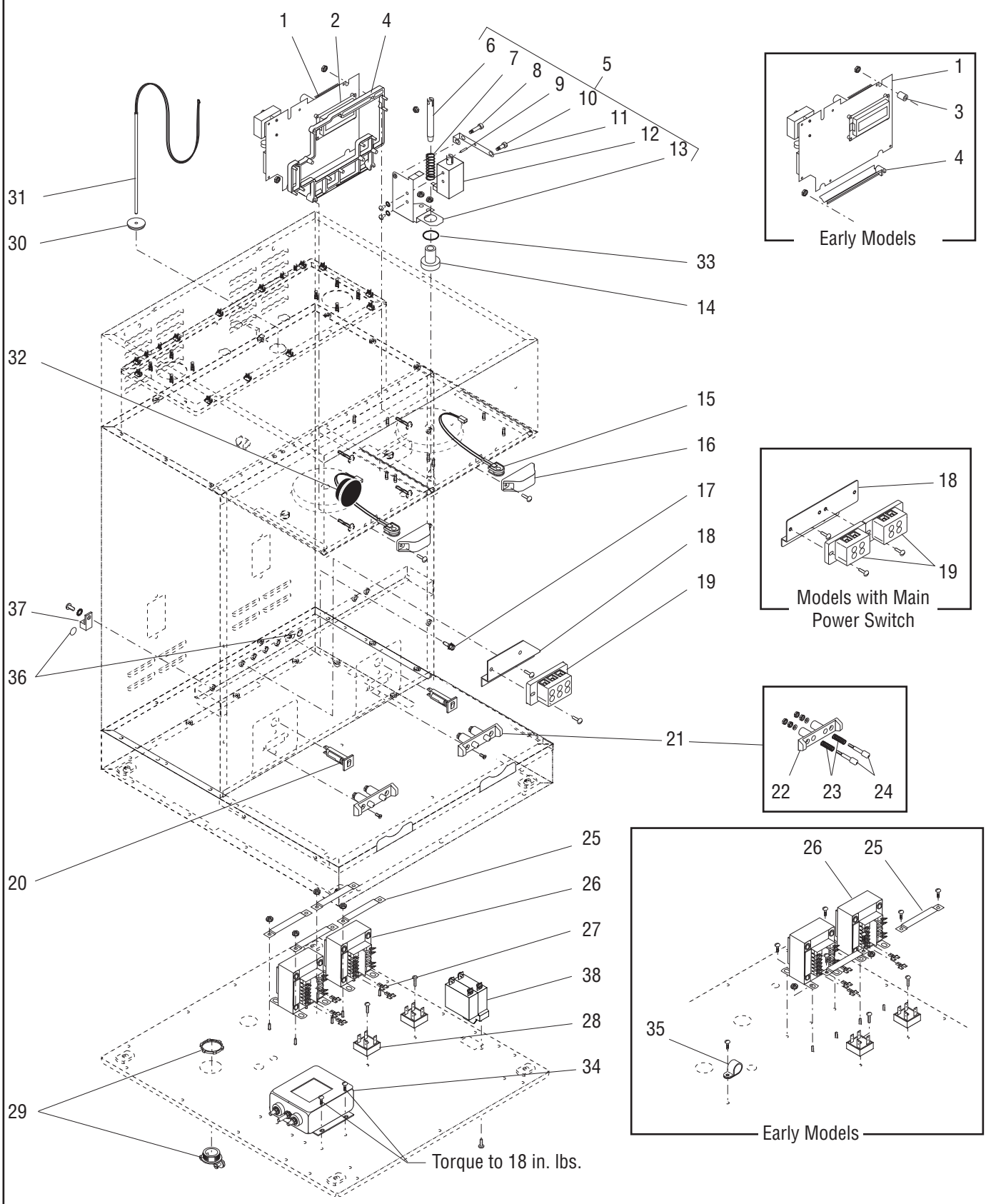
1
2
4
6
7
8
9
10
5
11
12
13
31
30
33
14
32
15
16
17
18
19
37
36
21
20
22
23
24
25
26
27
38
28
34
29
35
Torque to 18 in. lbs.
Early Models
Models with Main Power Switch
Early Models
P2573

ELECTRICAL CONTROLS

ITEM	PART NO.	QTY.	DESCRIPTION
1	29969.1000	1	Circuit Board, Main control, 120/208V & 120/240V
	29969.1003	1	Circuit Board, Main control, 240V
	38358.1004	1	Circuit Board, Main Control, 240V RoHS (Brewers with Product #33500.0034 only)
	38358.1006	1	Circuit Board, Main control, 240V RoHS (Models with 17 hole Sprayhead)
	38358.1000	1	Circuit Board, Main control, 240V RoHS
	00973.0000	2	Nut, Keps #6-32
2	35493.1002	2	CBA, Display
3	01533.0010	2	Spacer .194" I.D. x .75"
4	29970.0000	1	Mount, Circuit Board (Early models)
	40726.0000	1	Mount, Circuit Board (Late models)
	00973.0000	2	Nut, Keps #6-32
5	29499.1000	2	Solenoid Assy 120V (Includes items 6 thru 13)
	29499.1001	2	Solenoid Assy 200/230V (Includes items 6 thru 13)
	00970.0000	4	Nut, Keps #8-32
6	29494.0000	2	Pin, Funnel Stop
7	28897.0000	2	Spring, Compression
8	29504.0001	2	Shoulder Screw
9	26247.0001	2	Pin, Spring
10	29504.0000	2	Shoulder Screw
	00991.0000	2	Nut, Elastic Lock #8-32
11	29493.0000	2	Lever
12	29503.0000	2	Coil, Solenoid 120/208V & 120/240V
	29503.0001	2	Coil, Solenoid 200/230V
	33613.0000	4	Screw, Truss Head #8-32 x .25"
13	29492.0000	2	Bracket, Solenoid
14	29495.0000	2	Guide, Pin
15	- - - - - - - -	2	Sensing Coil WO/Leads (Early models) (Not available order item 46)
	32572.1001	1	Sensing Coil W/Violet Leads (Includes plug below)
	32572.1002	1	Sensing Coil W/Yellow Leads (Includes plug below)
	20621.0000	2	Plug, hole .203" Dia. (Not illustrated)
16	32573.0000	2	Cover, Sensing Coil
	01382.0007	4	Screw, Truss Head #6-32 x .38"
17	01309.0000	1	Ground Screw W/Terminal Washer #10-32 x .50" (120/208V, 120/240V & 200V)
	01375.0000	1	Screw, Pan Head, Slotted, Brass #10-32 x .50" (230V)
	01512.0000	1	Lockwasher #10
18	21120.0000	1	Bracket, Terminal Block Mounting
	39248.0001	1	Bracket, Terminal Block Mounting (Models with Main Power Switch)
	02308.0000	2	Screw, Pan Head #8-32 x .38"
19	07038.0000	1	Terminal Block, 3 Pole (BLK/RED/WHI)
	01106.0001	1	Terminal Block, 2 Pole (BLK/RED)
	01106.0003	1	Terminal Block, 2 Pole (BLU/BRN)
	01317.0000	2	Screw, Truss Head #8-32 x .50"
20	27181.0001	2	Circuit Breaker, 4 amp

(continued)

* Indicates the part number listed is for reference only. See DESCRIPTION for possible service replacement.

(continued)

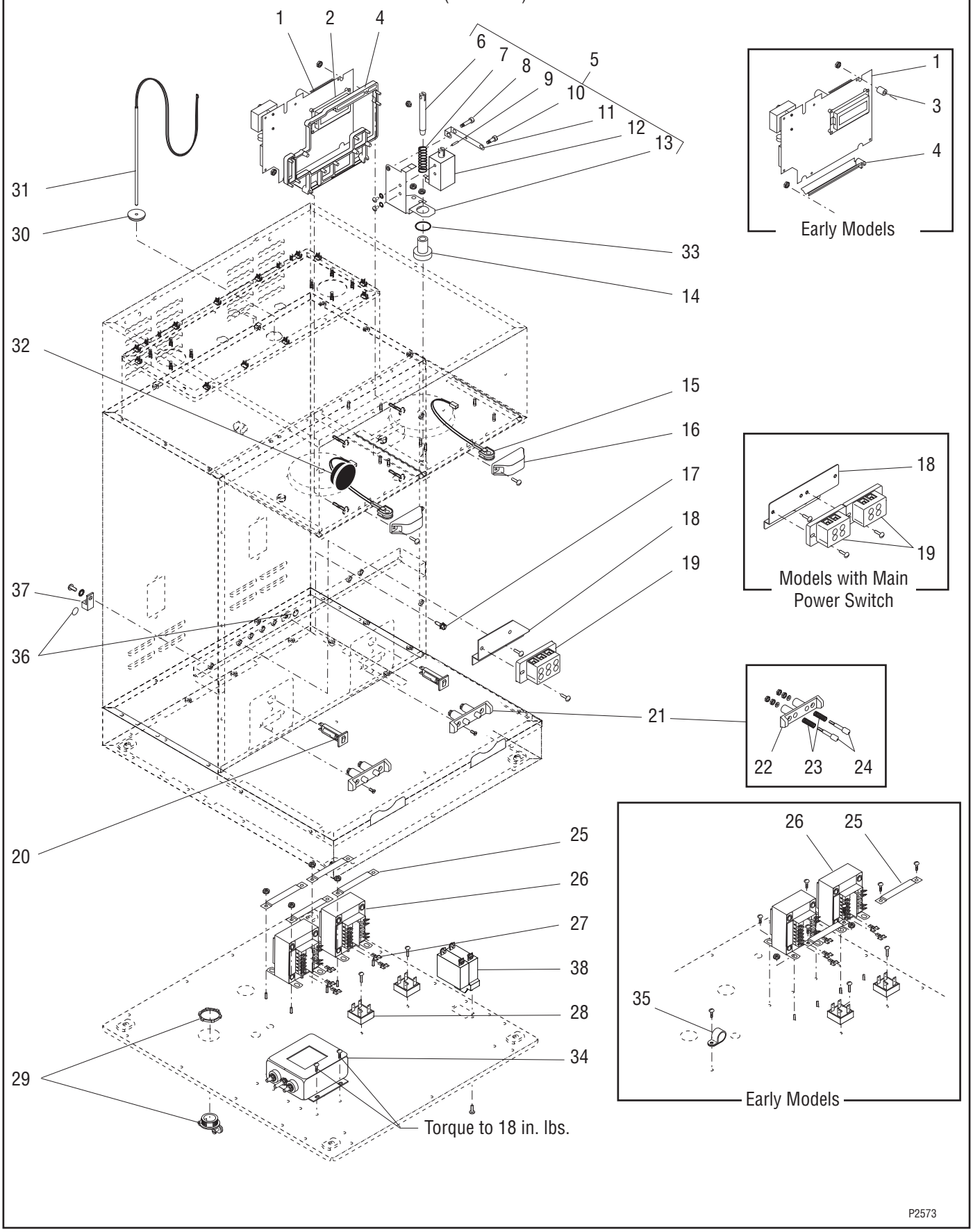
1
2
4
6
7
8
9
5
10
11
12
13
31
30
33
14
32
15
16
17
18
19
37
36
21
20
25
26
27
38
28
34
29
Torque to 18 in. lbs.
1
3
4
Early Models
18
19
Models with Main
Power Switch
22
23
24
26
25
35
Early Models
P2573

ELECTRICAL CONTROLS

ITEM	PART NO.	QTY.	DESCRIPTION
21	27790.1000	2	Receptacle Assembly, Spring Contact (Includes items 22, 23 & 24)
	20608.0000	4	Screw, Flat Head #6-32 x .375" SST Black
22	27746.0000	1	Housing, Spring Contact
23	27788.0000	2	Spring
24	27748.0000	2	Pin, Contact
	01521.0000	2	Washer, Flat
	00973.0000	4	Nut, Keps #6-32 - Zinc Pl
25	28264.0000	4	Strap, Transformer Holddown (only 2 used on early models)
	01347.0000	4	Screw, Truss Head #6-32 x .375" (Early models)
	00970.0000	8	Nut, Keps #8-32 (Late models)
26	27253.0001	2	Transformer, 80VA (120/240V)
	29179.0001	2	Transformer, 115/230V CE (200V & 230V)
	01347.0000	4	Screw, Truss Head #6-32 x .375" (Early models)
27	26722.0000	5	Adapter, Spade
28	22126.0000	2	Rectifier
	02367.0000	2	Screw, Truss Head #6-32 x .625"
29	01590.0000	1	Connector, Cable (120/208V, 120/240V & Late 230V models)
	32833.0000	1	Strain Relief, Cord (Early 230V models)
	01531.0000	1	Washer, Reducing
	05746.0001	1	Strain Relief, Cord (Later 230V models)
30	12570.0000	1	Grommet, Temperature Sensor
31	29327.0000	1	Probe Kit, Temperature/Dry Plug
32	32018.0000	1	Bumper
33	01530.0000	2	Washer, Split (Models with 3 piece Sprayhead Panel only)
34	29446.0002	1	EMI Filter, 30amp (200V & 230V)
	01347.0000	4	Screw, Truss Head #6-32 x .375"
	01510.0000	1	Lockwasher, Ext. tooth #6, Zinc Plated
35	00610.0000	1	Clamp, Cable Nylon (Early models)
	01347.0000	1	Screw, Truss Head #6-32 x .375"
36	00824.0002	2	Decal, Grounding
37	27705.0000	1	Terminal Lug #6-14 AWG (230V)
	01327.0000	1	Screw, Pan Head, Slotted #10-32 x .38"
	01512.0000	1	Lockwasher, Ext. tooth #10, Zinc Plated
38	38894.0001	1	Switch, Main Power (Not used on all models)
	01308.0002	2	Screw, Truss Head #6-32 x .25" (Switch Mounting)
	01327.0000	4	Screw, Pan Head #10-32 x .375"
	01512.0000	4	Lockwasher, External Tooth #10

Note: The following parts are not illustrated

(continued)

* Indicates the part number listed is for reference only. See DESCRIPTION for possible service replacement.

(continued)

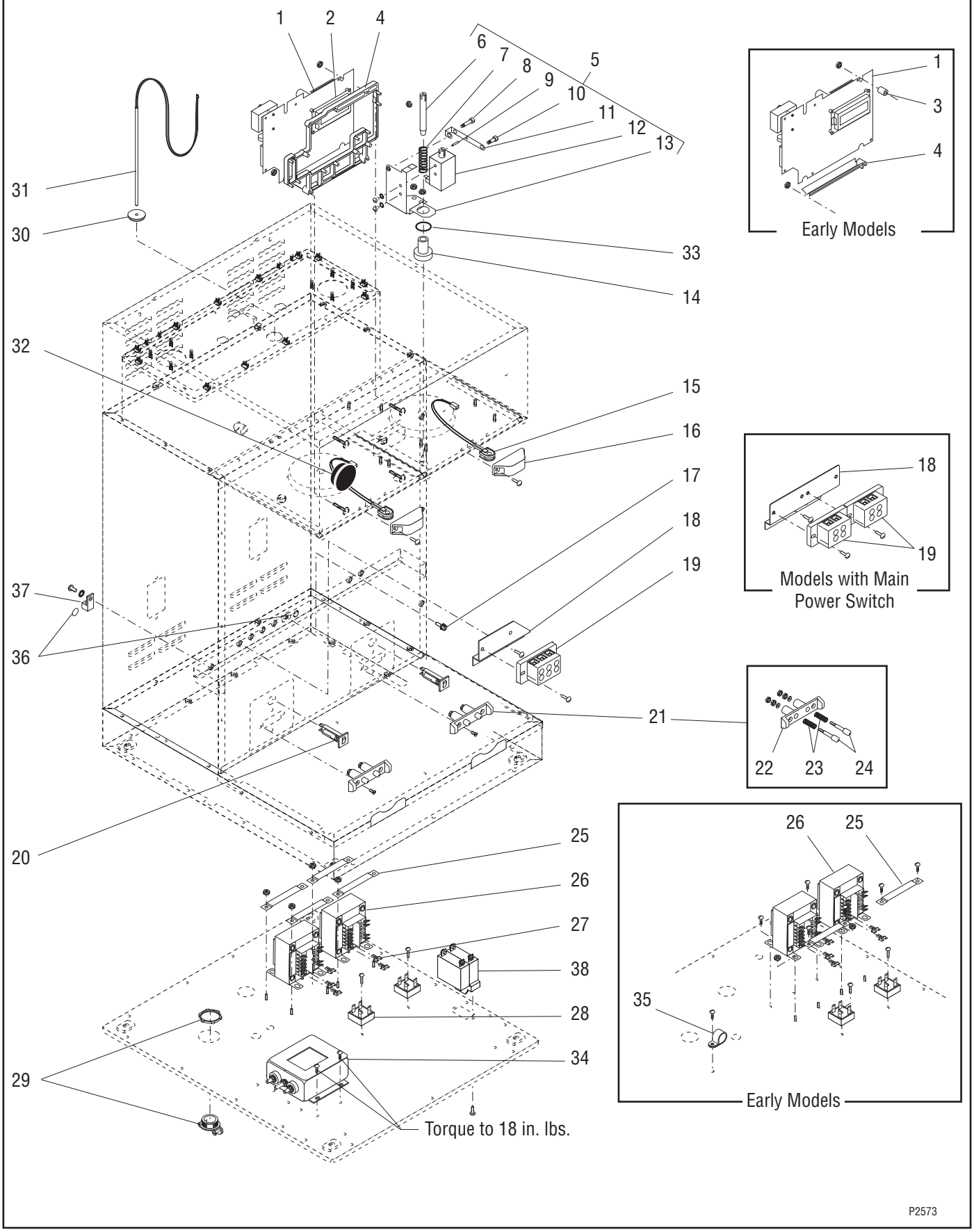
1
2
4
6
7
8
9
5
10
11
12
13
31
30
33
14
32
15
16
17
18
19
37
36
21
20
25
26
27
38
28
34
29
Torque to 18 in. lbs.
1
3
4
Early Models
18
19
Models with Main Power Switch
22
23
24
26
25
35
Early Models
P2573

ELECTRICAL CONTROLS

ITEM	PART NO.	QTY.	DESCRIPTION
39	33634.0001	1	Wiring Harness, Main, 120/208V & 120/240V (Brewers prior to 08/01/05)
	33634.0040	1	Wiring Harness, Main, 120/208V & 120/240V (Brewers after 11/19/13)
	33634.0006	1	Wiring Harness, Main, 200V (Brewers prior to 08/01/05)
	33634.0041	1	Wiring Harness, Main, 200V (Brewers after 08/01/05)
	33634.0009	1	Wiring Harness, Main, 200V (Brewers with Product #33500.0027 only)
	33634.0002	1	Wiring Harness, Main, 230V (Brewers prior to 08/01/05)
	33634.0014	1	Wiring Harness, Main, 120/208V & 120/240V (Brewers 8/1/05 - 11/19/13)
	33634.0015	1	Wiring Harness, Main, 230V (Brewers after 08/01/05 without Backflow Prevention)
	33634.0016	1	Wiring Harness, Main, 200V (Brewers 8/1/05 - 11/19/13)
	33634.0034	1	Wiring Harness, Main, 230V (Brewers with Backflow Prevention)
40	27791.0001	1	Wiring Harness, Server Contacts (Left) (120/208V & 120/240V)
	27791.0002	1	Wiring Harness, Server Contacts (Right) (120/208V & 120/240V)
	27791.0004	1	Wiring Harness, Server Contacts (Left) (200V & 230V)
	27791.0005	1	Wiring Harness, Server Contacts (Right) (200V & 230V)
41	37859.0005	1	Wiring Harness, Main Power Switch
42	00603.0000	2	Clamp, Cable .438" I.D.
	02308.0000	2	Screw, Pan Head #8-32 x .38"
43	27945.0005	1	Thermal Cut-off w/Leads, Red 51" 230V (Brewers without Backflow Prevention)
	27945.0015	1	Thermal Cut-off w/Leads, Red 61" 230V (Brewers without Backflow Prevention)
44	34707.0012	1	Wiring Harness, EMI Filter, 230V
	34707.0002	1	Wiring Harness, EMI Filter, 200V
45	04831.0000	1	Clamp, Routing-Vinyl Dipped
46	38338.0000	-	Kit, Funnel Sensors (Includes left and right Funnel Sensor Coils W/Leads)

* Indicates the part number listed is for reference only. See DESCRIPTION for possible service replacement.

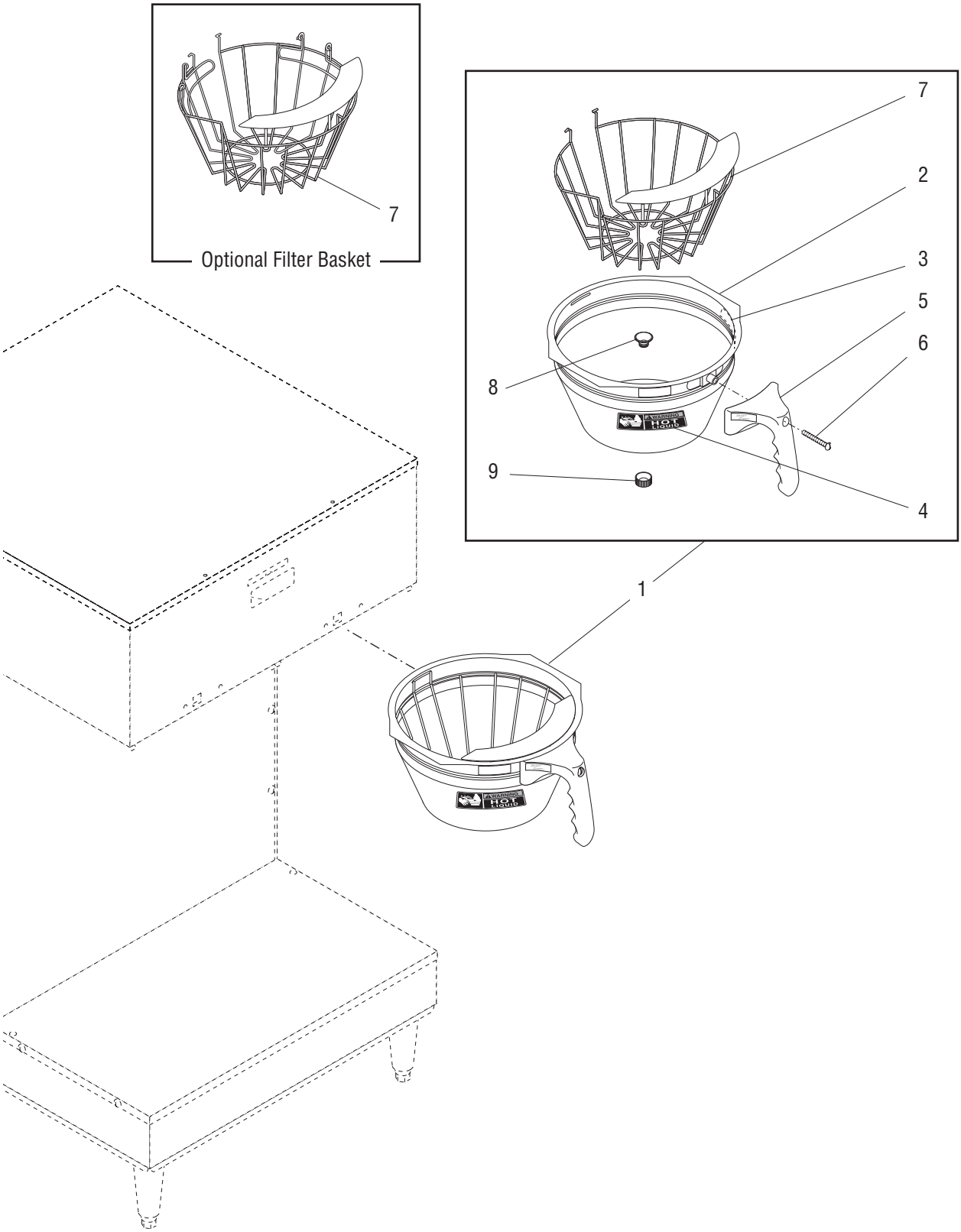

P2340

FUNNEL

ITEM	PART NO.	QTY.	DESCRIPTION	
1	32643.0000	2	Funnel Assy, SST	Each includes Items 2 thru 9
	32643.0010	2	Funnel Assy W/D-Ring Basket, SST (Optional)	
2	24462.0002	1	Funnel W/Decals (Includes items 3 & 4)	
3	03408.0004	1	Decal, Warning-Remove Funnel	
4	03409.0004	1	Decal, Warning-Hot Liquid	
5	32595.0000	1	Handle, Funnel-Black	
6	12499.0002	1	Screw, Round Head .25" - 20 x 1.50" BLK	
7	33089.0000	1	Filter Basket w/Splash Guard	
	33089.0001	1	Filter Basket w/Splash Guard & D-Rings (Optional)	
8	32139.0000	1	Insert, Funnel Tip - Male (Refer to item 10)	
9	32140.0000	1	Insert, Funnel Tip - Female (Refer to item 10)	
10	01031.0001	-	Funnel Tip Kit (Includes items 8 & 9)	

* Indicates the part number listed is for reference only. See DESCRIPTION for possible service replacement.