BUNN®

DUAL® SH DBC®

W/SMART FUNNEL®

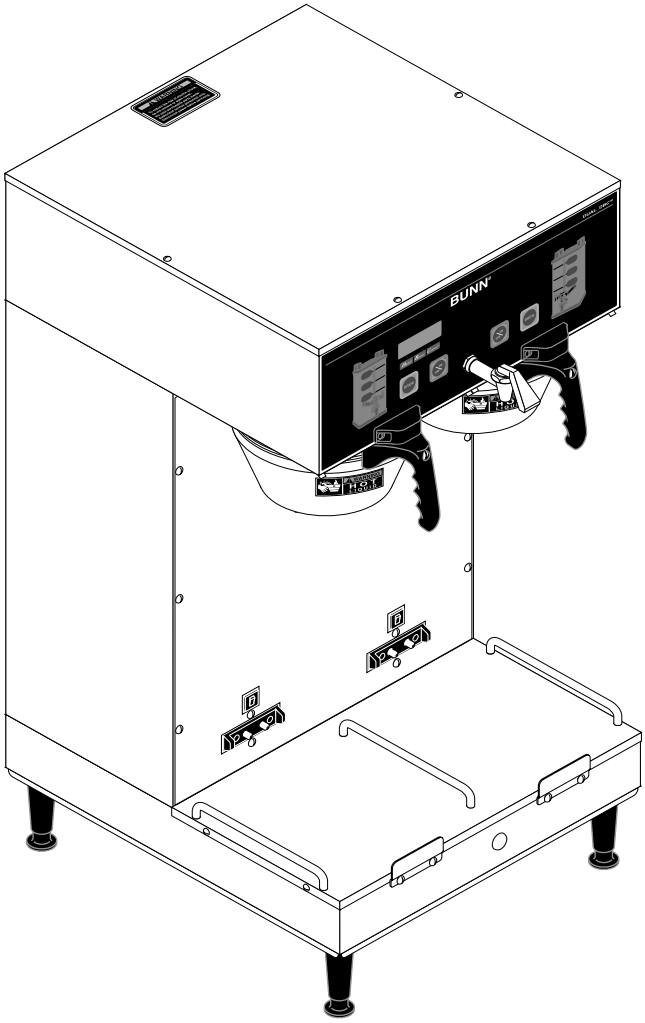

ILLUSTRATED PARTS CATALOG

Designs, materials, weights, specifications, and dimensions for equipment or replacement parts are subject to change without notice.

BUNN-O-MATIC CORPORATION

POST OFFICE BOX 3227
SPRINGFIELD, ILLINOIS 62708-3227
PHONE: (217) 529-6601 FAX: (217) 529-6644

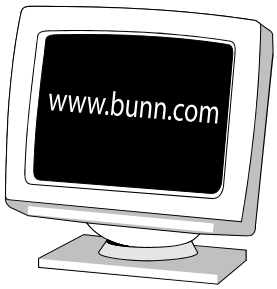

29878.0003F 10/14 ©2011 Bunn-O-Matic Corporation

DIR Num: 29878.0003 06, November 2014

BUNN-O-MATIC COMMERCIAL PRODUCT WARRANTY

Bunn-O-Matic Corp. ("BUNN") warrants equipment manufactured by it as follows:

1) Airpots, thermal carafes, decanters, GPR servers, iced tea/coffee dispensers, MCR/MCP/MCA single cup brewers, thermal servers and ThermoFresh® servers (mechanical and digital) 1 year parts and 1 year labor.
2) All other equipment - 2 years parts and 1 year labor plus added warranties as specified below:
a) Electronic circuit and/or control boards - parts and labor for 3 years.
b) Compressors on refrigeration equipment - 5 years parts and 1 year labor.
c) Grinding burrs on coffee grinding equipment to grind coffee to meet original factory screen sieve analysis - parts and labor for 4 years or 40,000 pounds of coffee, whichever comes first.

These warranty periods run from the date of installation BUNN warrants that the equipment manufactured by it will be commercially free of defects in material and workmanship existing at the time of manufacture and appearing within the applicable warranty period. This warranty does not apply to any equipment, component or part that was not manufactured by BUNN or that, in BUNN's judgment, has been affected by misuse, neglect, alteration, improper installation or operation, improper maintenance or repair, non periodic cleaning and descaling, equipment failures related to poor water quality, damage or casualty. In addition, the warranty does not apply to replacement of items subject to normal use including but not limited to user replaceable parts such as seals and gaskets. This warranty is conditioned on the Buyer 1) giving BUNN prompt notice of any claim to be made under this warranty by telephone at (217) 529-6601 or by writing to Post Office Box 3227, Springfield, Illinois 62708-3227; 2) if requested by BUNN, shipping the defective equipment prepaid to an authorized BUNN service location; and 3) receiving prior authorization from BUNN that the defective equipment is under warranty.
THE FOREGOING WARRANTY IS EXCLUSIVE AND IS IN LIEU OF ANY OTHER WARRANTY, WRITTEN OR ORAL, EXPRESS OR IMPLIED, INCLUDING, BUT NOT LIMITED TO, ANY IMPLIED WARRANTY OF EITHER MERCHANTABILITY OR FITNESS FOR A PARTICULAR PURPOSE. The agents, dealers or employees of BUNN are not authorized to make modifications to this warranty or to make additional warranties that are binding on BUNN. Accordingly, statements by such individuals, whether oral or written, do not constitute warranties and should not be relied upon.
If BUNN determines in its sole discretion that the equipment does not conform to the warranty, BUNN, at its exclusive option while the equipment is under warranty, shall either 1) provide at no charge replacement parts and/or labor (during the applicable parts and labor warranty periods specified above) to repair the defective components, provided that this repair is done by a BUNN Authorized Service Representative; or 2) shall replace the equipment or refund the purchase price for the equipment.
THE BUYER'S REMEDY AGAINST BUNN FOR THE BREACH OF ANY OBLIGATION ARISING OUT OF THE SALE OF THIS EQUIPMENT, WHETHER DERIVED FROM WARRANTY OR OTHERWISE, SHALL BE LIMITED, AT BUNN'S SOLE OPTION AS SPECIFIED HEREIN, TO REPAIR, REPLACEMENT OR REFUND.

In no event shall BUNN be liable for any other damage or loss, including, but not limited to, lost profits, lost sales, loss of use of equipment, claims of Buyer's customers, cost of capital, cost of down time, cost of substitute equipment, facilities or services, or any other special, incidental or consequential damages.

392, A Partner You Can Count On, Air Infusion, AutoPOD, AXIOM, BrewLOGIC, BrewMETER, Brew Better Not Bitter, BrewWISE, BrewWIZARD, BUNN Espress, BUNN Family Gourmet, BUNN Gourmet, BUNN Pour-O-Matic, BUNN, BUNN with the stylized red line, BUNNlink, Bunn-OMatic, Bunn-O-Matic, BUNNserve, BUNNSERVE with the stylized wrench design, Cool Froth, DBC, Dr. Brew stylized Dr. design, Dual, Easy Pour, EasyClear, EasyGard, FlavorGard, Gourmet Ice, Gourmet Juice, High Intensity, iMIX, Infusion Series, Intellisteam, My Café, Phase Brew, PowerLogic, Quality Beverage Equipment Worldwide, Respect Earth, Respect Earth with the stylized leaf and coffee cherry design, Safety-Fresh, savemycoffee.com, Scale-Pro, Silver Series, Single, Smart Funnel, Smart Hopper, SmartWAVE, Soft Heat, SplashGard, The Mark of Quality in Beverage Equipment Worldwide, ThermoFresh, Titan, trifecta, TRIFECTA (sylized logo), Velocity Brew, Air Brew, Beverage Bar Creator, Beverage Profit Calculator, Brew better, not bitter., Build-A-Drink, BUNNSource, Coffee At Its Best, Cyclonic Heating System, Daypart, Digital Brewer Control, Element, Milk Texturing Fusion, Nothing Brews Like a BUNN, Picture Prompted Cleaning, Pouring Profits, Signature Series, Sure Tamp, Tea At Its Best, The Horizontal Red Line, Ultra are either trademarks or registered trademarks of Bunn-O-Matic Corporation. The commercial trifecta® brewer housing configuration is a trademark of Bunn-O-Matic Corporation.

DIR Num: 29878.0003 06, November 2014

TABLE OF CONTENTS

Base - Trunk - Hood - Covers & Panels 4
Electrical Controls 22
Faucet 20
Funnel 28
Numerical Index 30
Sprayhead Valve and Sprayhead 18
Solenoid & Lines (Brewers with backflow prevention) 14
Strainer, Solenoid & Lines (Brewers without backflow prevention) 12
Tank, Mounting Brackets and Drain 10
Tank Heater & Overflow Protection Devices 8
Water By-Pass 16

DIR Num: 29878.0003 06, November 2014

BASE - TRUNK - HOOD - COVERS & PANELS

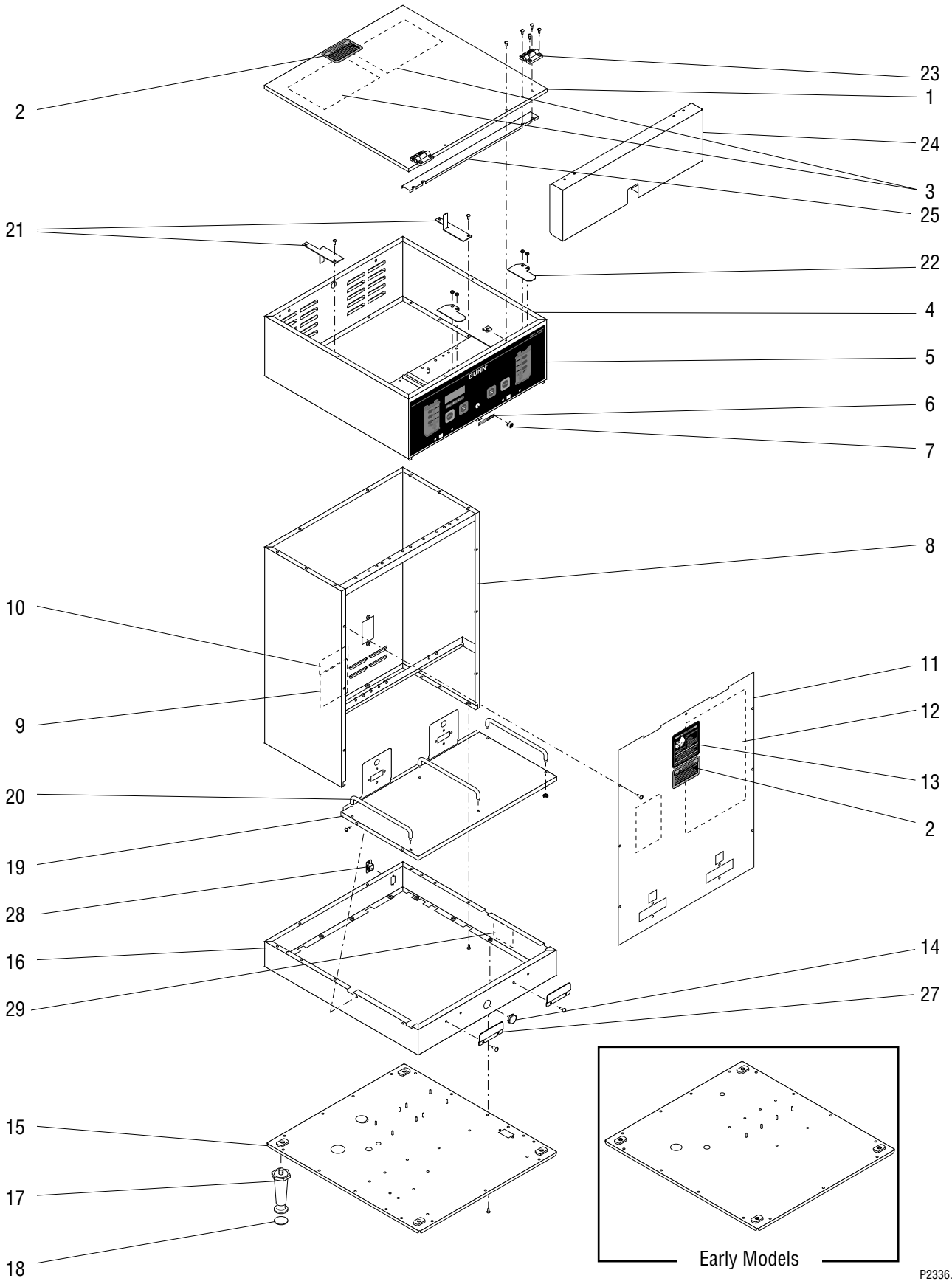

DIR Num: 29878.0003 06, November 2014

BASE - TRUNK - HOOD - COVERS & PANELS

ITEM	PART NO.	QTY.	DESCRIPTION
1	20921.1000	1	Cover Assy, Top SST (Includes item 2 & 3)
	25376.0002	1	Cover Assy, Top BLK (Includes item 2 & 3)
	20921.1003	1	Cover Assy, Top (Includes items 2 & 3) (Models with Panel Guard)
	02336.0000	4	Screw, Truss Head SST #4 - 40 x .38"
	02336.0002	4	Screw, Truss Head BLK #4 - 40 x .38"
	00916.0000	4	Clip, J-Type #4-40
2	37881.0000	2	Decal, No Serviceable Parts
3	25151.0000	2	Shield, Insulator
4	35388.1004	1	Hood W/Decals SST (Includes items 5, 6 & 7)
	35388.1005	1	Hood W/Decals BLK (Includes items 5, 6 & 7)
	02308.0000	16	Screw, Pn-Hd #8 - 32 x .375"
5	29974.0000	1	Switch, Membrane (Models W/Upper Faucet)
	29974.0006	1	Switch, Membrane (Models W/Lower Faucet)
6	20201.5600	1	Decal, Caution Hot Water (Early models)
7	05749.0004	1	Plug, Hole .50" Dia. (Early models W/Lower Faucet)
8	29889.1000	1	Trunk W/Decals SST (Includes items 9 & 10) (Models W/External Heat Sink)
	29889.1001	1	Trunk W/Decals BLK (Includes items 9 & 10) (Models W/External Heat Sink)
	26835.1000	1	Trunk W/Decals SST (Includes items 9 & 10) (Models W/Internal Heat Sink)
9	00986.0000	1	Decal, Warning - Electrical
10	00656.0001	1	Decal, Comply to Plumbing Code
11	27761.1002	1	Panel W/Decals, Trunk SST, 120/208V & 120/240V
	27761.1001	1	Panel W/Decals, Trunk BLK, 120/208V & 120/240V
	27761.1003	1	Panel W/Decals, Trunk SST, 230V (Brewers without Backflow Prevention) — Includes items 2, 12 & 13
		1	Panel W/Decals, Trunk SST, 230V (Brewers with Backflow Prevention)
	27761.1005	1	Panel W/Decals, Trunk SST, 200V
	01382.0003	11	Screw, Truss Head SST #6 - 32 x .375"
	01382.0007	11	Screw, Truss Head BLK #6 - 32 x .375"
12	29876.0015	1	Schematic, 120/240V
	29876.0001	1	Schematic, 230V (Brewers without Backflow Prevention)
	29876.0012	1	Schematic, 230V (Brewers with Backflow Prevention)
	29876.0017	1	Schematic, 200V
	29876.0009	1	Schematic, 200V (Brewers with Product #33500.0027 only)
13	00658.0000	1	Decal, Caution - Decanter/Funnel
14	00619.0007	1	Plug, Hole .50" Dia SST
	00669.0002	1	Plug, Hole .50" Dia BLK
15	27765.0000*	1	Cover, Bottom SST, 120/208V & 120/240V Brewers
	27765.0001*	1	Cover, Bottom BLK, 120/208V & 120/240V Brewers
	27765.0003*	1	Cover, Bottom SST, 120/208V (Brewers w/optional Tank Drain) — Early models Order item 30
	27765.0006*	1	Cover, Bottom SST, 230V Brewers
	35793.0001*	1	Cover, Bottom SST, 200V Brewers
	38936.0000	1	Cover, Bottom SST, 120/208V & 120/240V Brewers
	38936.0007	1	Cover, Bottom SST, 120/208V & 120/240V Brewers (Models with Main Power Switch)
	38936.0001	1	Cover, Bottom BLK, 120/208V & 120/240V Brewers
	38936.0009	1	Cover, Bottom BLK, 120/208V & 120/240V Brewers (Models with Main Power Switch)
	38936.0002	1	Cover, Bottom SST, 120/208V (Brewers w/optional Tank Drain)

(continued)

* Indicates the part number listed is for reference only. See DESCRIPTION for possible service replacement.

DIR Num: 29878.0003 06, November 2014

BASE - TRUNK - HOOD - COVERS & PANELS

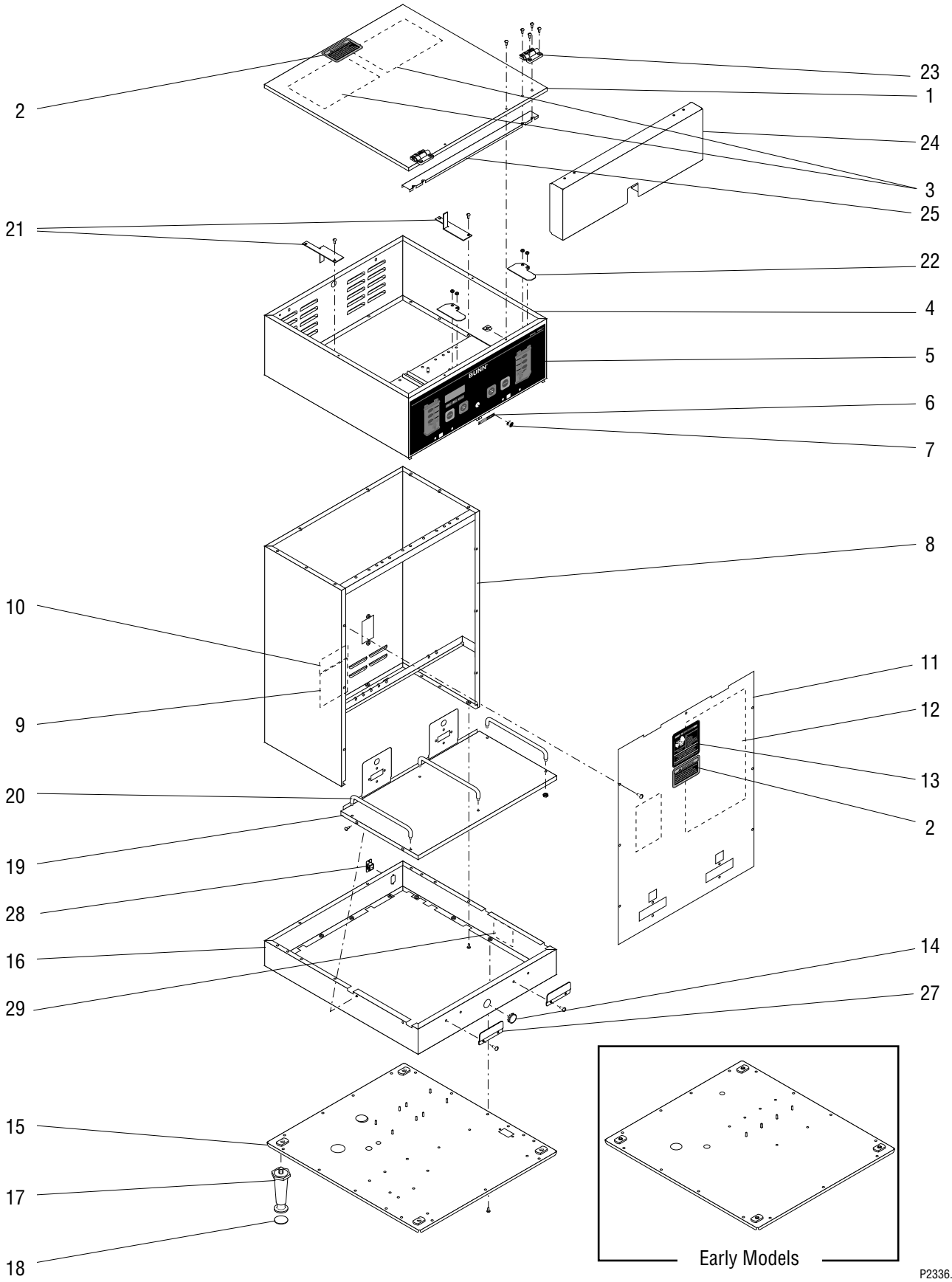

DIR Num: 29878.0003 06, November 2014

BASE - TRUNK - HOOD - COVERS & PANELS

ITEM	PART NO.	QTY.	DESCRIPTION
	38936.0003	1	Cover, Bottom SST, 230V (Brewers without Backflow Prevention)
	38936.0011	1	Cover, Bottom SST, 230V (Brewers with Backflow Prevention)
	38936.0005	1	Cover, Bottom SST, 200V Brewers
	02308.0000	15	Screw, Pan Head #8 - 32 x .375"
16	35334.0000	1	Base Housing SST,120/208V & 120/240V
	35334.0001	1	Base Housing BLK,120/208V & 120/240V
	35334.0002	1	Base Housing SST, 230V
	02308.0000	8	Screw, Pan Head #8 - 32 x .375"
17	00502.0000	4	Leg, 4.0" SST Adjustable — See item 26
	26528.0000	4	Leg, 4.0" Plastic
18	03996.0000	4	Pad, Anti Skid
19	27760.0002	1	Cover, Server Platform SST
	27760.0004	1	Cover, Server Platform BLK
	01382.0003	4	Screw, Truss Head SST #6 - 32 x .375"
	01382.0007	4	Screw, Truss Head BLK #6 - 32 x .375"
20	12249.0001	3	Guide Rail SST
	12249.0007	3	Guide Rail BLK
	00970.0000	6	Nut, Keps #8 - 32
21	26949.0001	2	Bracket, Tank Supporting
22	32649.0000	2	Plate — Models without Funnel Locks
	00970.0000	4	Nut, Keps #8-32
23	26504.0000	2	Hinge, Panel Guard — Optional
	01382.0003	8	Screw, Truss Head w/Nylon Patch #6-32 x .38"
24	32323.0002	1	Guard, Panel
25	29384.0000	1	Bracket, Hinge Support
26	13255.0003	-	Leg Kit, Plastic (Includes 4 each of items 17 & 18) (Not illustrated)
	13255.0002	-	Leg Kit, SST (Includes 4 each of items 17 & 18) (Not illustrated)
27	21537.0001	2	Plate, Server Stop SST
	21537.0003	2	Plate, Server Stop BLK
	01347.0000	4	Screw, Truss Head SST #6-32 x .38"
	01347.0002	4	Screw, Truss Head BLK #6-32 x .38"
28	36398.0000	1	Hole Plug, DB-9 (Early models)
29	39803.0000	1	Decal, Main Switch (Models with Main Power Switch only)
30	38936.1001	1	Bottom Cover Kit, BLK — Includes necessary components to relocate the Transformers
	38936.1005	1	Bottom Cover Kit, SST
31	50417.0000	1	Switch Cover Kit (Kit Items 1, 2, 3, 23, 24 & 25)

* Indicates the part number listed is for reference only. See DESCRIPTION for possible service replacement.

DIR Num: 29878.0003 06, November 2014

TANK HEATER & OVERFLOW PROTECTION DEVICES

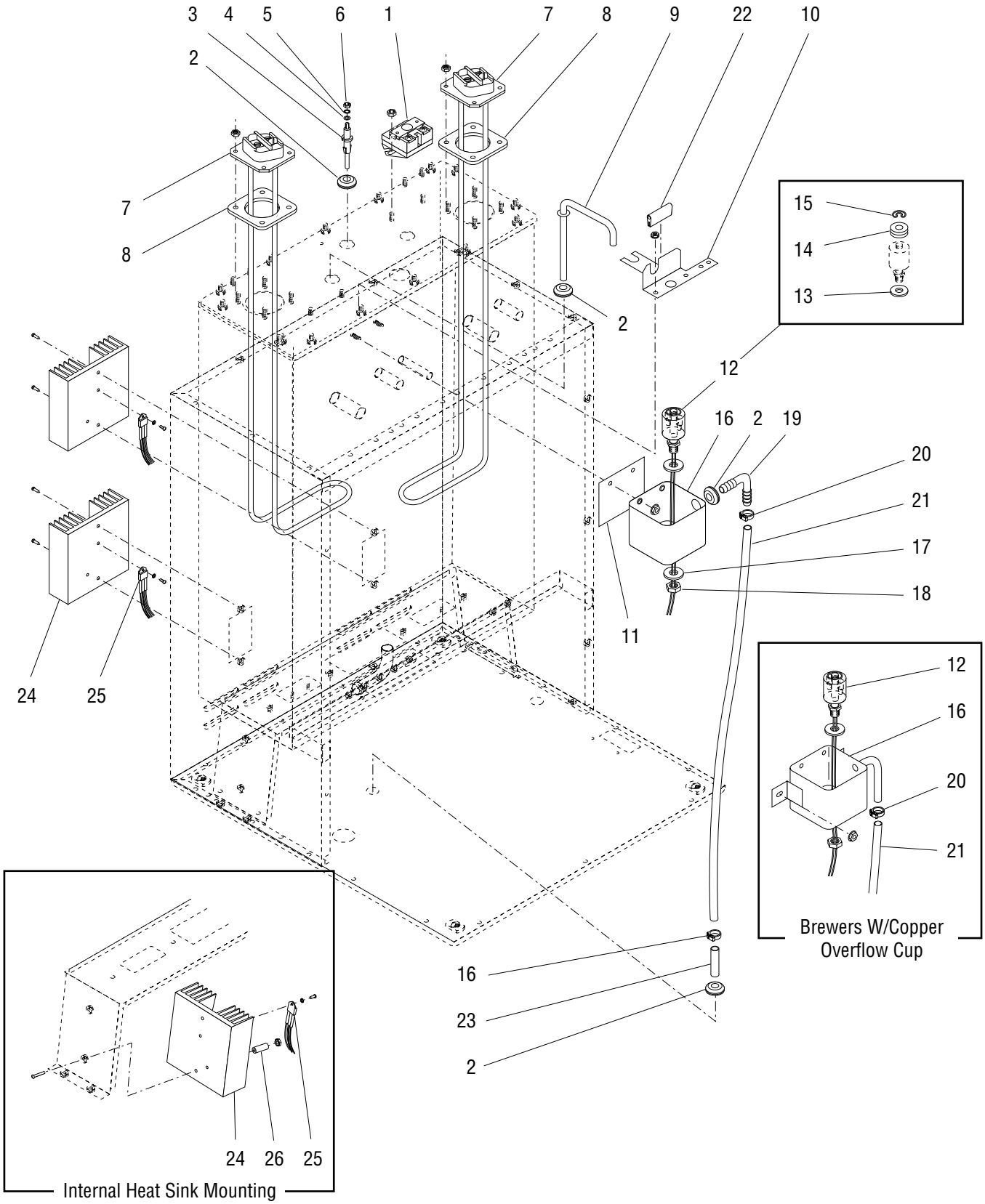

P2337.50

DIR Num: 29878.0003 06, November 2014

TANK HEATER & OVERFLOW PROTECTION DEVICES

ITEM	PART NO.	QTY.	DESCRIPTION
1	23717.0003	2	Thermostat, Limit
	00908.0000	4	Nut, Hex #8 - 32
2	02536.0000	4	Grommet .375" I.D.
3	20936.1000	1	Probe Kit (Includes items 4, 5 & 6)
4	01501.0000	1	Washer .164" I.D. x .375" O.D.
5	20203.0100	1	Lockwasher, Internal Tooth #8
6	00908.0000	1	Nut, Hex #8 - 32
7	12305.1000	2	Tank Heater, 4000W @ 208V (Includes item 8)
	20922.1000	2	Tank Heater, 3300W @ 240V (Includes item 8)
	20922.1002	2	Tank Heater, 2850W @ 208V, 3795W @ 240V (Includes item 8)
	00908.0000	8	Nut, Hex #8 - 32
8	12398.0002	2	Gasket, Tank Heater
9	26622.0001	1	Tube Assy, Vent
10	27473.0000	1	Bracket, Overflow Cup Mounting
11	41266.0000	1	Film, Insulating
12	03803.0000	1	Switch Assy, Liquid Level, 120V (Includes items 13, 14 & 15)
	03803.0002	1	Switch Assy, Liquid Level, 230V (Includes items 13, 14 & 15)
13	03633.0000	2	Gasket, Float Switch (Only 1 used in this application)
14	- - - - - - - -	3	Washer, Adjusting (**DO NOT USE IN THIS APPLICATION**)
15	03807.0000	1	Clip, Spring
16	41259.1003	1	Kit, Overflow Cup (Aluminum) (Includes items 2,11, 17 &19)
	22728.0000	1	Overflow Cup Assy (Copper) (Also replaces aluminum cup)
	00971.0000	2	Nut, Keps #10 - 32
17	04797.0000	1	Washer, Celcon .520” I.D. x 1.0” O.D.
18	00946.0000	1	Nut, Hex .125” FPT
19	41280.0001	1	Elbow,.375” Multi Barb
20	12422.0000	2	Clamp, Hose .47"/.54" I.D.
21	03236.0007*	1	Tube, Silicone .312" I.D. x 29" (Order item 29)
22	02434.0010*	1	U-Channel 2.0" (Order item 28)
23	21801.0002	1	Tube .375" O.D.
24	20541.0001	2	Heat Sink (Also order item 27)
	01382.0007	4	Screw, Truss Head 6-32 x .38" (External Heat Sink)
	35477.0000	4	Screw, Round Head 6-32 x 2.50" (Internal Heat Sink)
25	12565.0028	2	Triac Assy, 40 amp, 120V
	12565.0029	2	Triac Assy, 40 amp, 200V
	12565.0013	2	Triac Assy, 40 amp, (Early 230V Brewers with Thermal Fuzes)
	02328.0003	2	Screw, Pan Head #6-32 x .312"
	01520.0000	2	Lockwasher #6
26	35476.0000	4	Spacer, 1.50" (Internal Heat Sink only)
27	M2522.1000	-	Heat Sink Compound
28	02434.1000	-	U-Channel 18.0" (Use as required)
29	03236.1001	-	Tube, Silicone .312" I.D. x 36.0"
	03236.1003	-	Tube, Silicone .312" I.D. x 60.0"
	03236.1002	-	Tube, Silicone .312" I.D. x 120.0"
30	03851.0000	2	Wire Nut (Not used on 230V models)

Not illustrated

* Indicates the part number listed is for reference only. See DESCRIPTION for possible service replacement.

DIR Num: 29878.0003 06, November 2014

TANK, MOUNTING BRACKETS AND DRAIN

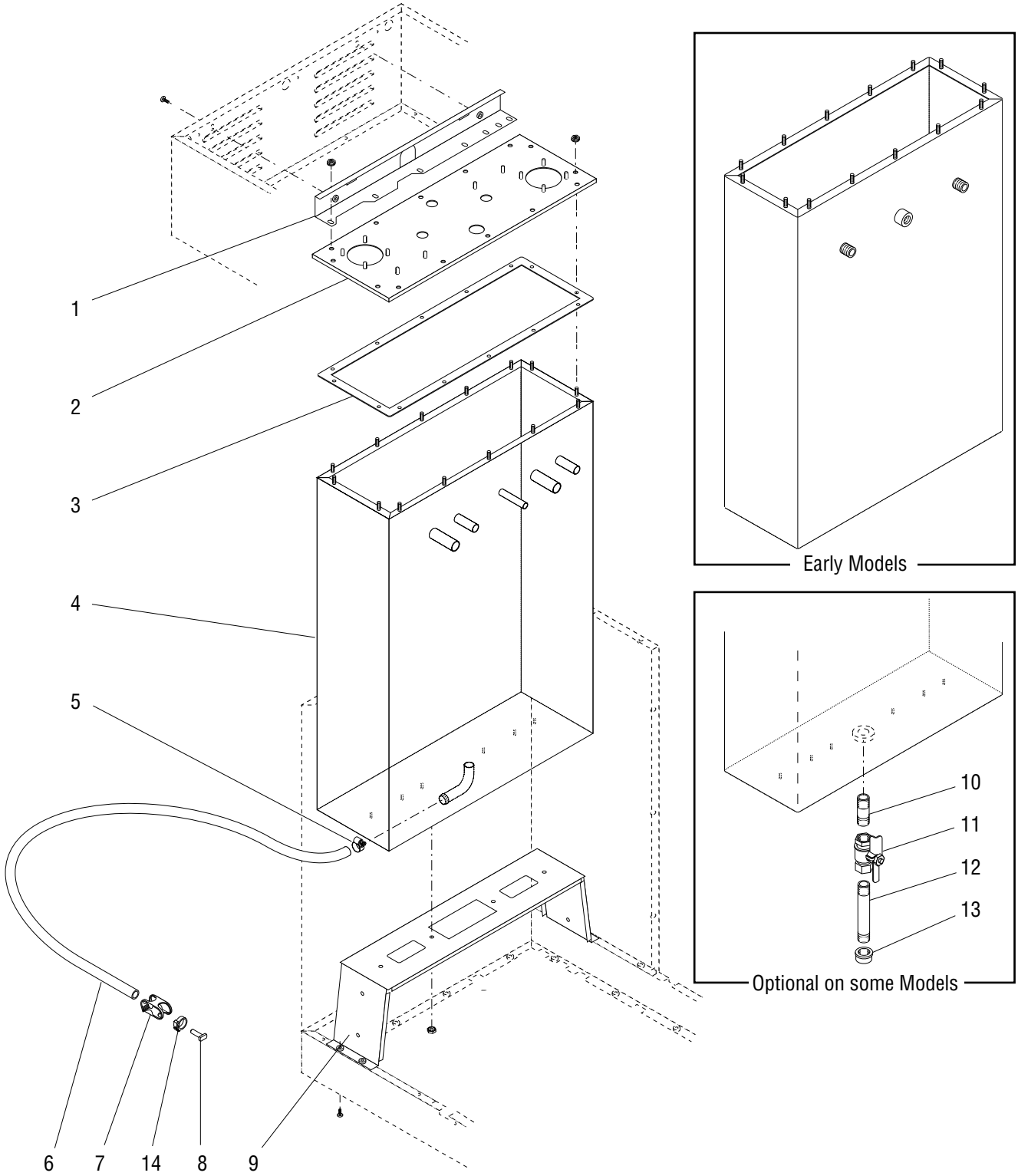

P1043.40

DIR Num: 29878.0003 06, November 2014

TANK, MOUNTING BRACKETS AND DRAIN

ITEM	PART NO.	QTY.	DESCRIPTION
1	26826.0000*	1	Bracket, Tank Support (Top) (Early models. Not available rder Late Model Bracket)
	37526.0000	1	Bracket, Tank Support (Top) (Late models)
	01317.0003	2	Screw, Truss Head SST #8 - 32 x .375” LKG
	01315.0006	2	Screw, Truss Head BLK #8 - 32 x .375” LKG
	00908.0000	2	Nut, Hex #8 - 32 (2 additional used on early models)
2	20881.0001	1	Lid, Tank
	00908.0000	14	Nut, Hex #8 - 32
3	20883.0000	1	Gasket, Tank
4	20951.1000	1	Tank (Early models)
	20878.1008	1	Tank (Late models)
5	29421.0000	1	Clamp, Hose-Worm Drive .625"/.75"
6	32591.0011*	1	Tube, Silicone .50" I.D. x 36" LG (Order item 15)
7	11630.0001	1	Clamp, Tubing Shut Off .75" O.D.
8	35086.0000	1	Plug, .50" I.D. Hose
9	26829.0000	1	Bracket, Tank Mounting (Bottom)
	00971.0000	4	Nut, Keps #10 - 32
	02308.0000	4	Screw, Pan Head #8 - 32 x .375"
10	32242.0000	1	Nipple, Brass 2.0"
11	35439.1000	1	Valve, Ball Shut-off
12	32242.0002	1	Nipple, Brass 5.0"
13	32241.0000	1	Cap
14	12422.0009	1	Clamp, Hose .71"/.80" I.D.
15	32591.1002	-	Tube, Silicone .50" I.D. x 36.0" LG

Optional

* Indicates the part number listed is for reference only. See DESCRIPTION for possible service replacement.

DIR Num: 29878.0003 06, November 2014

STRAINER, SOLENOID & LINES (BREWERS WITHOUT BACKFLOW PREVENTION)

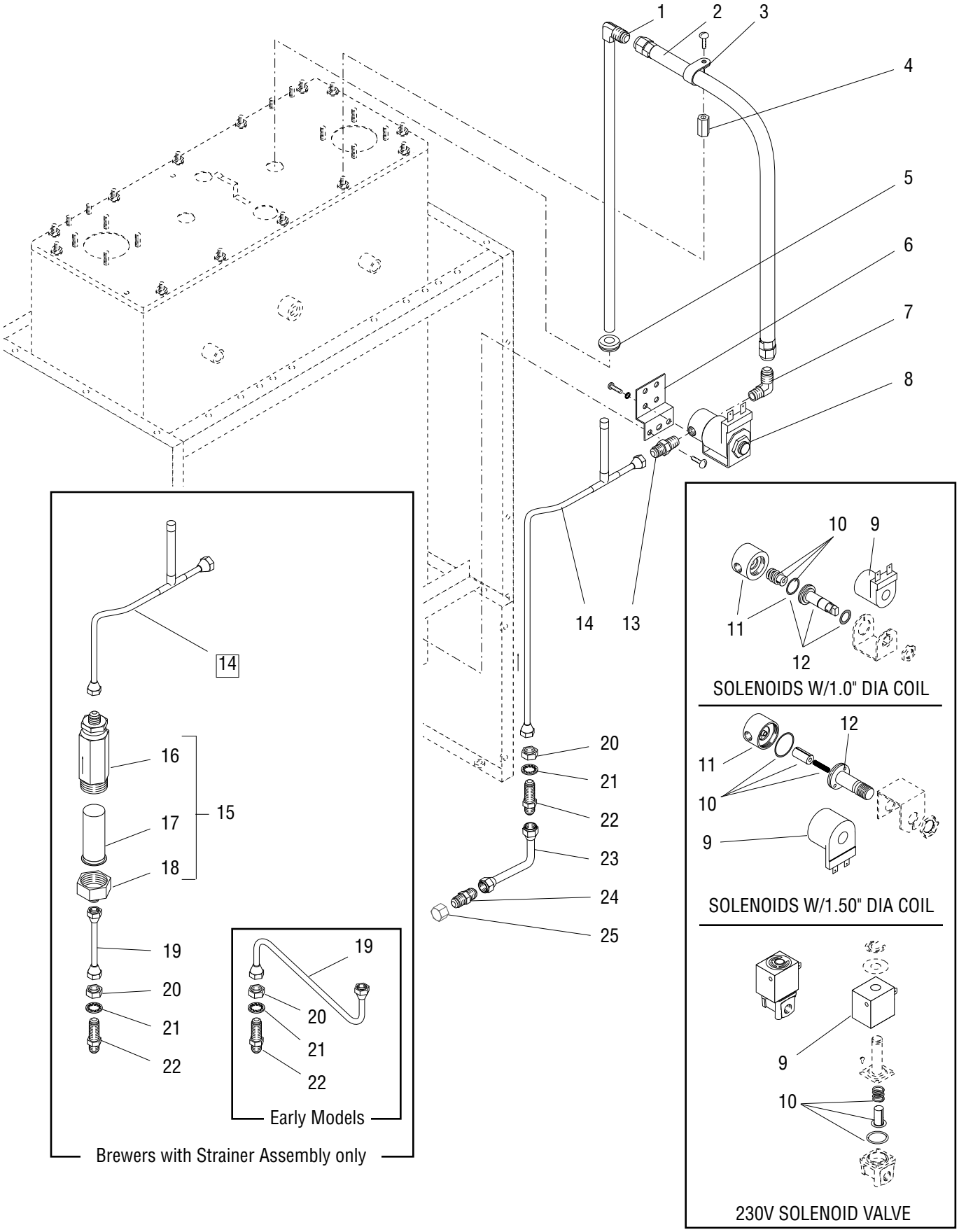

P2572

DIR Num: 29878.0003 06, November 2014

STRAINER, SOLENOID & LINES
(BREWERS WITHOUT BACKFLOW PREVENTION)

ITEM	PART NO.	QTY.	DESCRIPTION
1	20937.0000	1	Tube, Tank Fill
2	20977.1000	1	Hose Assy, Solenoid to Tank
3	00620.0000	1	Clamp, Hose Retaining
	02308.0000	1	Screw, Pan Head #8 - 32 x .375"
4	00950.0000	1	Spacer, Hose Clamp
5	02536.0000	1	Grommet .375" I.D.
6	20201.4301	1	Bracket, Solenoid Mounting, 120/208V & 120/240V
	02308.0000	2	Screw, Pan Head #8 - 32 x .375"
	28309.0000	1	Bracket, Solenoid Mounting, 230V
	02329.0000	2	Screw, Pan Head #8 - 32 x .312"
7	00400.0001	1	Elbow, Male .250" Flare x .125" MPT
8	01085.0000	1	Solenoid Valve Assy, 120V - 1.48" Dia Coil (Without Inlet Screen)
	01085.1006	1	Solenoid Valve Assy, 120V - 1.48" Dia Coil (With Inlet Screen)
	01085.0002	1	Solenoid Valve Assy, 120V - 1.0" Dia Coil
	21180.0001	1	Solenoid Valve Assy 200V - 1.50" Dia Coil
	01975.0000	1	Solenoid Valve Assy 230V - 1.50" Dia Coil (Late models) (Without Inlet Screen)
	01085.1007	1	Solenoid Valve Assy, 230V - 1.48" Dia Coil (With Inlet Screen)
	01327.0000	2	Screw, Pan Head #10 - 32 x .375"
	01502.0000	2	Lockwasher, Split #10
	28005.0000	1	Solenoid Valve Assy 230V (Includes items 7 & 8) (Early models)
	01315.0000	2	Screw, Truss Head #8 - 32 x .38"
	01519.0000	2	Lockwasher, Split #8
9	01101.0000	1	Solenoid Valve Coil, 120V - 1.50" Dia
	28480.0000	1	Solenoid Valve Coil, 120V - 1.0" Dia
	21181.0000	1	Solenoid Valve Coil, 200V
	28020.0000	1	Solenoid Valve Coil, 230V (Early models)
	01100.0000	1	Solenoid Valve Coil, 230V (Late models)
10	01111.0000	1	Solenoid Valve Repair Kit - 1.50" Dia Coil (Includes Plunger, Seal and Spring)
	01111.0002	1	Solenoid Valve Repair Kit - 1.0" Dia Coil (Includes Plunger, Spring and O-ring)
	28021.0000	1	Solenoid Valve Repair Kit, 230V (Early models)
11	01079.0000	1	Solenoid Valve Base - 1.50" Dia Coil (Without Screen)
	28479.0000	1	Solenoid Valve Base Kit - 1.0" Dia Coil (Includes O-ring)
12	01116.0000	1	Guide - 1.50" Dia Coil
	28481.0000	1	Guide Kit - 1.0" Dia Coil
13	00402.0001	1	Connector .250" Flare x .125" MPT
14	25134.0000	1	Tube Assy, Flow Control to Solenoid (Brewers with Strainer Assy)
	25134.0001	1	Tube Assy, Flow Control to Solenoid (Brewers without Strainer Assy)
15	23820.1000	1	Strainer Assy (Includes items 16 thru 18)
16	- - - - - - - -	1	Body (Not Available order item 15)
17	23721.0000	1	Screen
18	22249.0000	1	End Cap, Water Strainer
19	27083.0000	1	Tube Assy, Bulkhead to Flow Control (Early models)
	38949.0000	1	Tube Assy, Bulkhead to Strainer (Late models)
20	00463.0000	1	Nut, Hex .438" - 20
21	01532.0000	1	Lockwasher, Internal Tooth .438" I.D.
22	00459.0000	1	Bulkhead Fitting .250" Flare
23	00310.0002	1	Tube Assembly, Bulkhead to Supply
24	00436.0001	1	Union .250" Male Flare
25	00935.0000	1	Cap (For shipping purposes only)

Brewers with Strainer Assy only

* Indicates the part number listed is for reference only. See DESCRIPTION for possible service replacement.

DIR Num: 29878.0003 06, November 2014

SOLENOID & LINES (BREWERS WITH BACKFLOW PREVENTION)

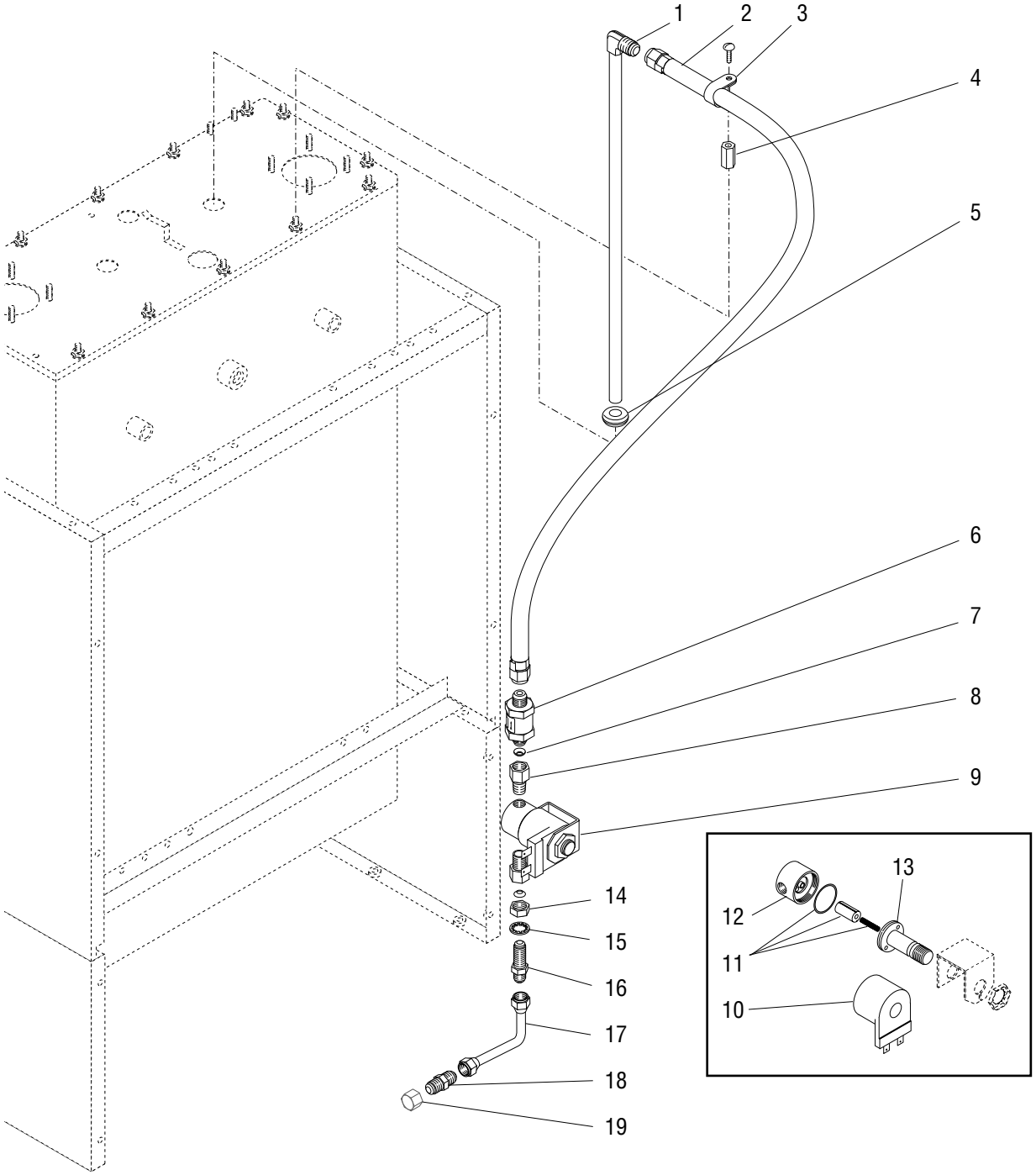

DIR Num: 29878.0003 06, November 2014

SOLENOID & LINES
(BREWERS WITH BACKFLOW PREVENTION)

ITEM	PART NO.	QTY.	DESCRIPTION
1	20937.0000	1	Tube, Tank Fill
2	20977.1002	1	Hose Assy, Solenoid to Tank
3	00620.0000	1	Clamp, Hose Retaining
	02308.0000	1	Screw, Pan Head #8 - 32 x .375"
4	00950.0000	1	Spacer, Hose Clamp
5	02536.0000	1	Grommet .375" I.D.
6	01171.0001	1	Check Valve
7	24684.0000	2	Gasket
8	24613.0001	2	Adapter, .250" FFL x .125" MPT
9	01085.1007	1	Solenoid Valve Assy, 230V - 1.48" Dia Coil (With Inlet Screen)
	01327.0000	2	Screw, Pan Head #10 - 32 x .375"
	01502.0000	2	Lockwasher, Split #10
10	01100.0000	1	Solenoid Valve Coil, 230V
11	01111.0000	1	Solenoid Valve Repair Kit - 1.50" Dia Coil (Includes Plunger, Seal and Spring)
12	01079.0000	1	Solenoid Valve Base - 1.50" Dia Coil (Without Screen)
13	01116.0000	1	Guide - 1.50" Dia Coil
14	00463.0000	1	Nut, Hex .438" - 20
15	01532.0000	1	Lockwasher, Internal Tooth .438" I.D.
16	00459.0000	1	Bulkhead Fitting .250" Flare
17	00310.0002	1	Tube Assembly, Bulkhead to Supply
18	00436.0001	1	Union .250" Male Flare
19	00935.0000	1	Cap (For shipping purposes only)

* Indicates the part number listed is for reference only. See DESCRIPTION for possible service replacement.

DIR Num: 29878.0003 06, November 2014

WATER BY-PASS

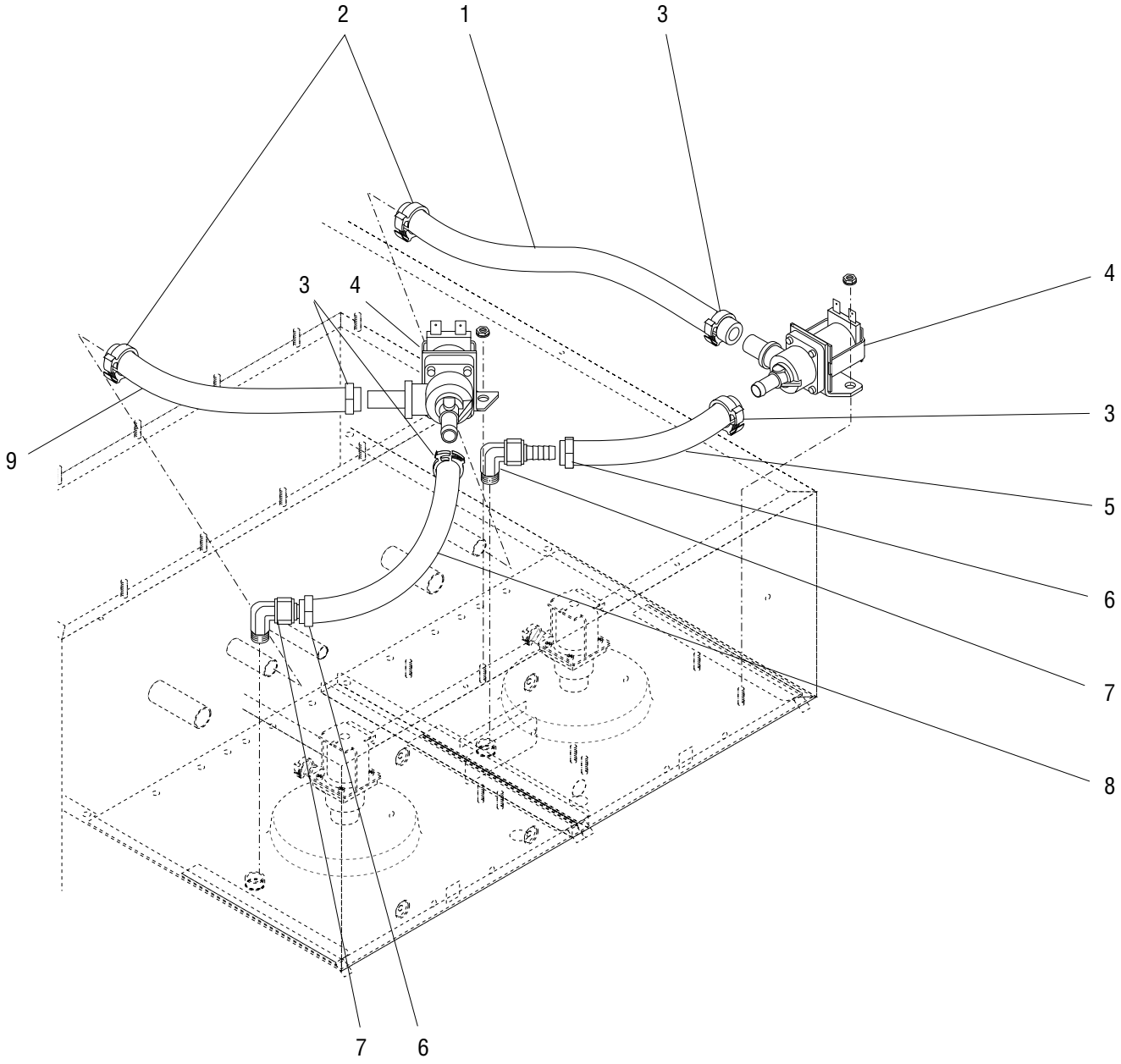

P3284.75

DIR Num: 29878.0003 06, November 2014

WATER BY-PASS

ITEM	PART NO.	QTY.	DESCRIPTION
1	20976.0001*	1	Tube, Silicone .375" I.D. x 9.5" (Order item 10) (Early model Tank)
	32591.0007*	1	Tube, Silicone .50" I.D. x 8.75" (Order item 11) (Late model Tank)
2	12422.0009	2	Clamp, Hose .71"/.80" I.D.
3	12422.0005	4	Clamp, Hose .61"/.71" I.D.
4	27370.0000	2	Valve Assy, By-Pass 120/208V & 120/240V models
	27370.0001	2	Valve Assy, By-Pass 200V models
	27370.0002	2	Valve Assy, By-Pass 230V models
	00970.0000	4	Nut, Keps #8 - 32
5	20976.0006*	1	Tube, Silicone .375" I.D. x 4.5" (Order item 10) (Early model Tank)
	20976.0058*	1	Tube, Silicone .375" I.D. x 4.25" (Order item 10) (Late model Tank)
6	12422.0001	2	Clamp, Hose .59"/.66" I.D.
7	32648.0000	2	Elbow, Compression
8	20976.0003*	1	Tube, Silicone .375" I.D. x 10.50" (Order item 10) (Early model Tank)
	20976.0057*	1	Tube, Silicone .375" I.D. x 9.25" (Order item 10) (Late model Tank)
9	20976.0045*	1	Tube, Silicone .375" I.D. x 6.50" (Order item 10) (Early model Tank)
	32591.0009*	1	Tube, Silicone .50" I.D. x 5.25" (Order item 11) (Late model Tank)
10	20976.1000	-	Tube, Silicone .375" I.D. x 12.0"
	20976.1001	-	Tube, Silicone .375" I.D. x 36.0"
	20976.1002	-	Tube, Silicone .375" I.D. x 120.0"
11	32591.1000	-	Tube, Silicone .50" I.D. x 36.0"

Not illustrated

* Indicates the part number listed is for reference only. See DESCRIPTION for possible service replacement.

DIR Num: 29878.0003 06, November 2014

Early Model Tank

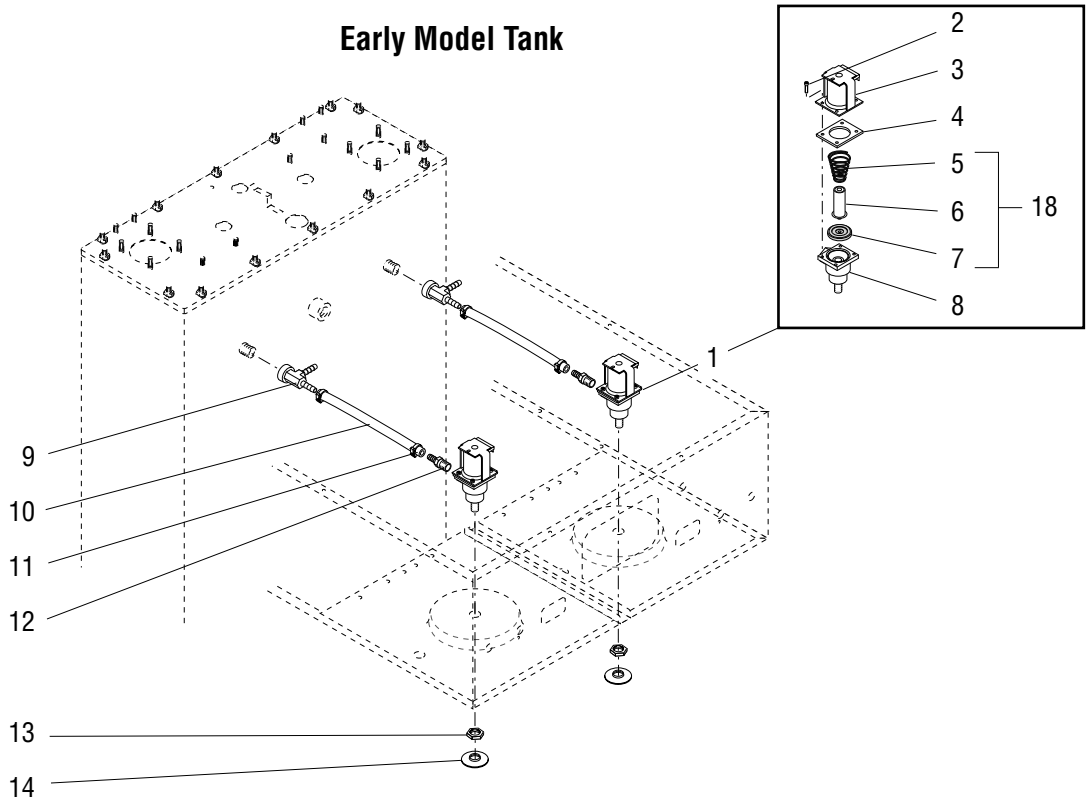

Late Model Tank

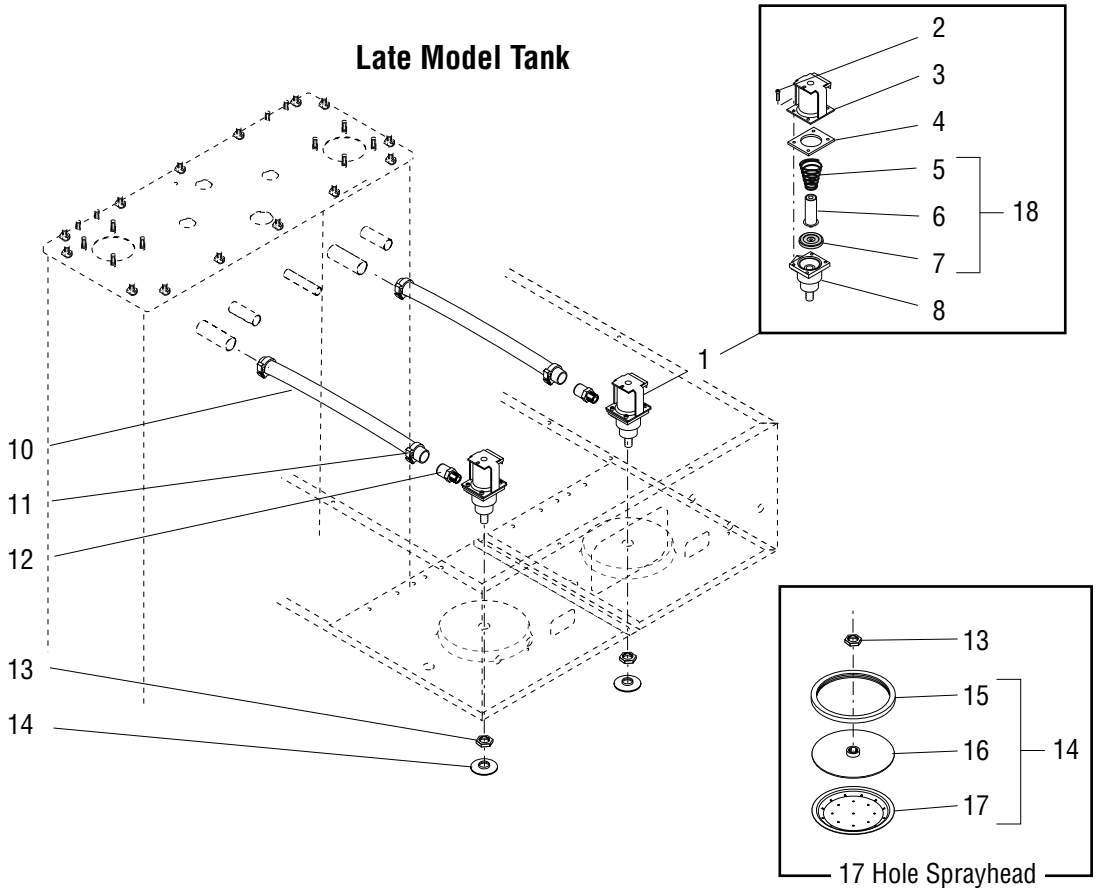

P2224.40

DIR Num: 29878.0003 06, November 2014

SPRAYHEAD VALVE & SPRAYHEAD

ITEM	PART NO.	QTY.	DESCRIPTION
1	26846.0000	2	Valve Assy, Sprayhead 120/208V & 120/240V models (Includes items 2 thru 8)
	26846.0001	2	Valve Assy, Sprayhead 200V models (Includes items 2 thru 8)
	26846.0002	2	Valve Assy, Sprayhead 230V models (Includes items 2 thru 8)
2	23254.0000	4	Screw, #8 - 32
3	22305.0000	1	Coil Assy, Valve 120/208V & 120/240V models
	22305.0003	1	Coil Assy, Valve 200V models
	22305.0002	1	Coil Assy, Valve 230V models
4	23256.0000	1	Spacer Plate
5	- - - - - - - -	1	Spring (Not available order item 18)
6	- - - - - - - -	1	Plunger (Not available order item 18)
7	23255.0000	1	Diaphragm
8	- - - - - - - -	1	Body (Not available order item 1)
9	26924.0000	2	Tee, Run .25" FPT x .38" x .38" Barb (Early model Tank only)
10	20976.0006*	2	Tube, Silicone .38" I.D. x 4.5" (Order item 19) (Early model Tank)
	35052.0001*	2	Tube, Silicone .75" I.D. x 6.75" (Order item 20) (Late model Tank)
11	12422.0001	4	Clamp, Hose .59"/.66" I. D. (Early model Tank)
	12422.0008	4	Clamp, Hose .93"/1.1" I.D. (Late model Tank)
12	21136.0001	2	Fitting, Barb .375" x .25" MPT (Early model Tank)
	34956.0001	2	Fitting, .25" NPTF .281" I.D. (Models with 6 & 17 hole Sprayhead) — Late model Tank
	34956.0000	2	Fitting, .25" NPTF .344" I.D. (Brewer P/N 33500.0024 only) — Late model Tank
	34956.0002	2	Fitting, .25" NPTF .255" I.D. (Brewer P/N 33500.0003 only) — Late model Tank
13	01075.0000	2	Nut, Hex .438" - 20
14	01082.0000	2	Sprayhead, 6 Hole (Brewer P/N 33500.0009, 33500.0026 & 33500.0027 only)
	01082.0002	2	Sprayhead, 6 Hole
	01082.0003	2	Sprayhead, 7 Hole (Brewer P/N 33500.0024 only)
	35308.1005	2	Sprayhead Assy, 17 Hole (Includes one each of items 15 - 17) (Brewer P/N 33500.0014 only)
	35308.1004	2	Sprayhead Assy, 21 Hole (Includes one each of items 15 - 17) (Brewer P/N 33500.0040 only)
15	34868.0000	2	Seal, Sprayhead
16	35070.0001	2	Sprayhead Back
17	34867.0005	2	Sprayhead (17 hole)
	34867.0004	2	Sprayhead (21 hole)
18	11517.0008	-	Solenoid Valve Repair Kit, Sprayhead (Includes one each of items 5, 6 & 7)
19	20976.1000	1	Tube, Silicone .375" I.D. x 12.0" — Not illustrated
	20976.1001	1	Tube, Silicone .375" I.D. x 36.0" — Not illustrated
	20976.1002	1	Tube, Silicone .375" I.D. x 120.0" — Not illustrated
20	35052.1000	1	Tube, Silicone .75" I.D. x 12.0" — Not illustrated

* Indicates the part number listed is for reference only. See DESCRIPTION for possible service replacement.

DIR Num: 29878.0003 06, November 2014

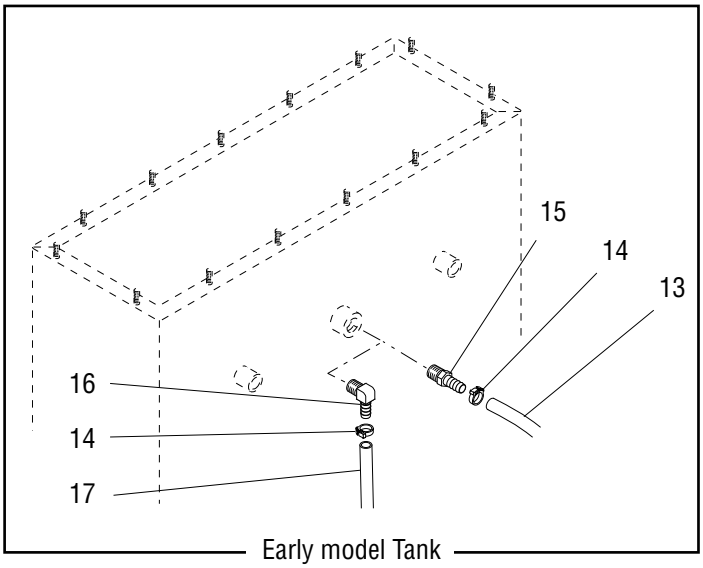

Early model Tank

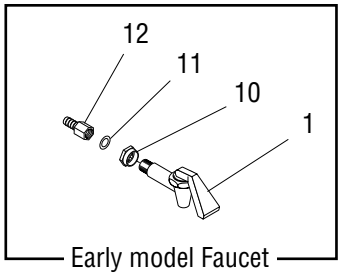

Early model Faucet

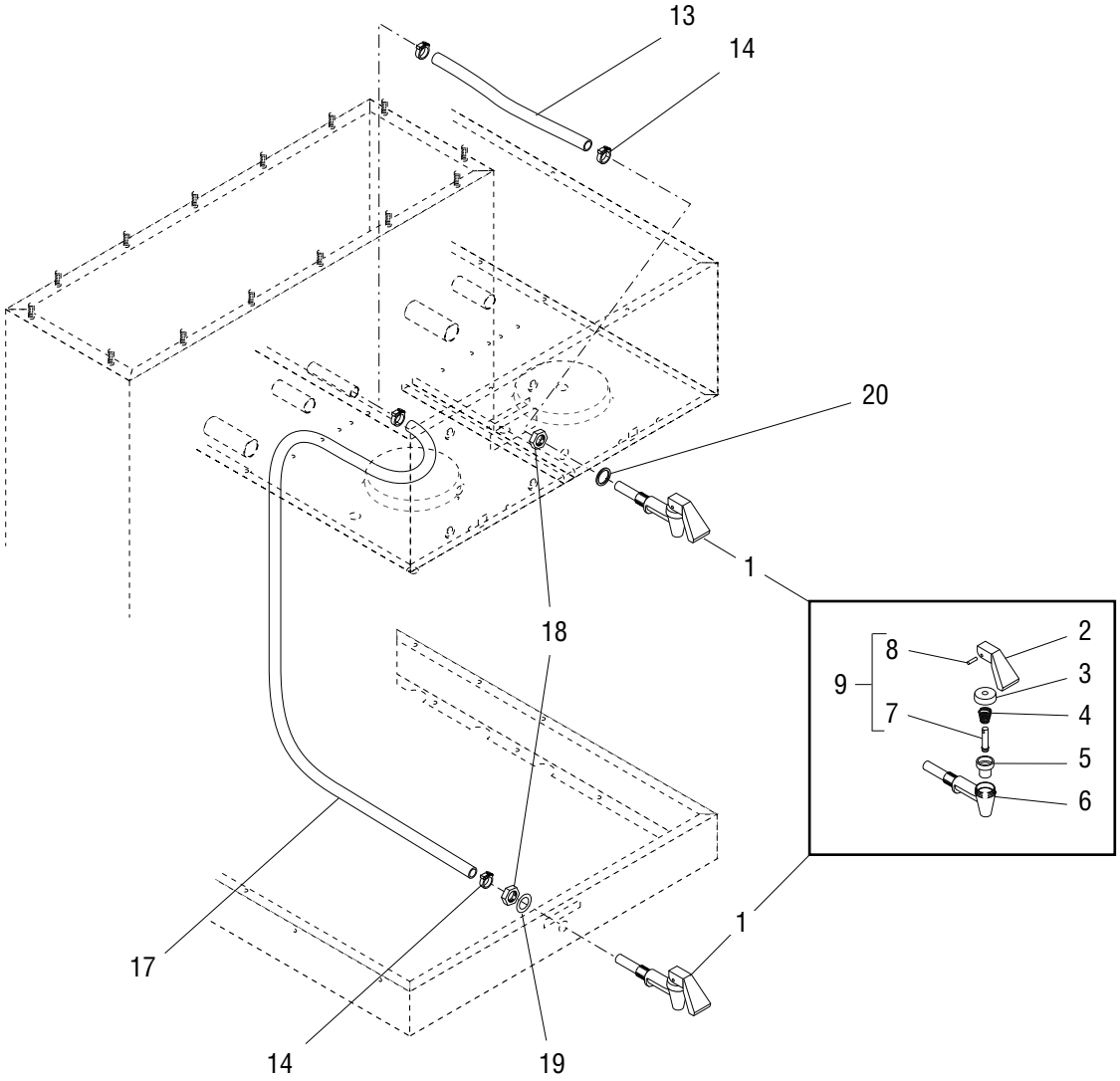

Only one Faucet location option (Upper or Lower) is applicable to each Brewer

P3078.55

DIR Num: 29878.0003 06, November 2014

FAUCET

ITEM	PART NO.	QTY.	DESCRIPTION	
1	02596.1005	1	Faucet Assy (Includes items 2 thru 8) (Early models)	
	29075.0000	1	Faucet Assy (Includes items 2 thru 8) (Late models)	
2	02861.0003	1	Handle, Faucet “Warning Hot Liquid”	
3	02854.0000	1	Bonnet, Faucet	
4	02595.0000	1	Spring, Faucet	
5	02766.0000	1	Seat Cup, Faucet	
6	02856.0002	1	Body, Faucet	
7	13054.0000	1	Stem, Faucet	
8	02858.0000	1	Pin, Spring .125" Dia. x .50"	
9	02594.0000	1	Faucet Stem W/Pin (Includes items 7 & 8)	
10	02850.0000	1	Jam Nut, Faucet (Early models)	
11	27574.0000	1	Washer, Sealing (Early models)	
12	12437.0000	1	Adapter, Barb (Early models)	Upper Faucet models only
13	20976.0003*	1	Tube, Silicone .38" I.D. x 10.50" (Order item 21) (Early model Tank)	
	20976.0059*	1	Tube, Silicone .38" I.D. x 11.75" (Order item 21) (Late model Tank)	
14	12422.0001	2	Clamp, Hose .59" x .66" I.D.	
15	21136.0001	1	Fitting, Barb .375" x .25" MPT (Early model Tank only)	
16	20202.1601	1	Elbow, 90° .375" Barb x .25" MPT (Early model Tank only)	Lower Faucet models only
17	20976.0036*	1	Tube, Silicone .38" I.D. x 38.0" (Order item 21) (Early model Tank)	
	20976.0066*	1	Tube, Silicone .38" I.D. x 48.0" (Order item 21) (Late model Tank)	
18	00942.0000	1	Nut, Hex Brass .50”	
19	01532.0005	1	Washer, Intl Tooth .50” Lock	
20	01532.0005	1	Washer, Intl Tooth .50” Lock (Late models)	
21	20976.1000	1	Tube, Silicone .38" I.D. x 12.0"	Not Illustrated
	20976.1001	1	Tube, Silicone .38" I.D. x 36.0"	
	20976.1002	1	Tube, Silicone .38" I.D. x 120.0"	
22	28706.0002	-	Faucet Kit (Includes items 2,4,5,7 & 8)	
23	M2517.0000	-	Sealant, Pipe 6 ml	

* Indicates the part number listed is for reference only. See DESCRIPTION for possible service replacement.

DIR Num: 29878.0003 06, November 2014

ELECTRICAL CONTROLS

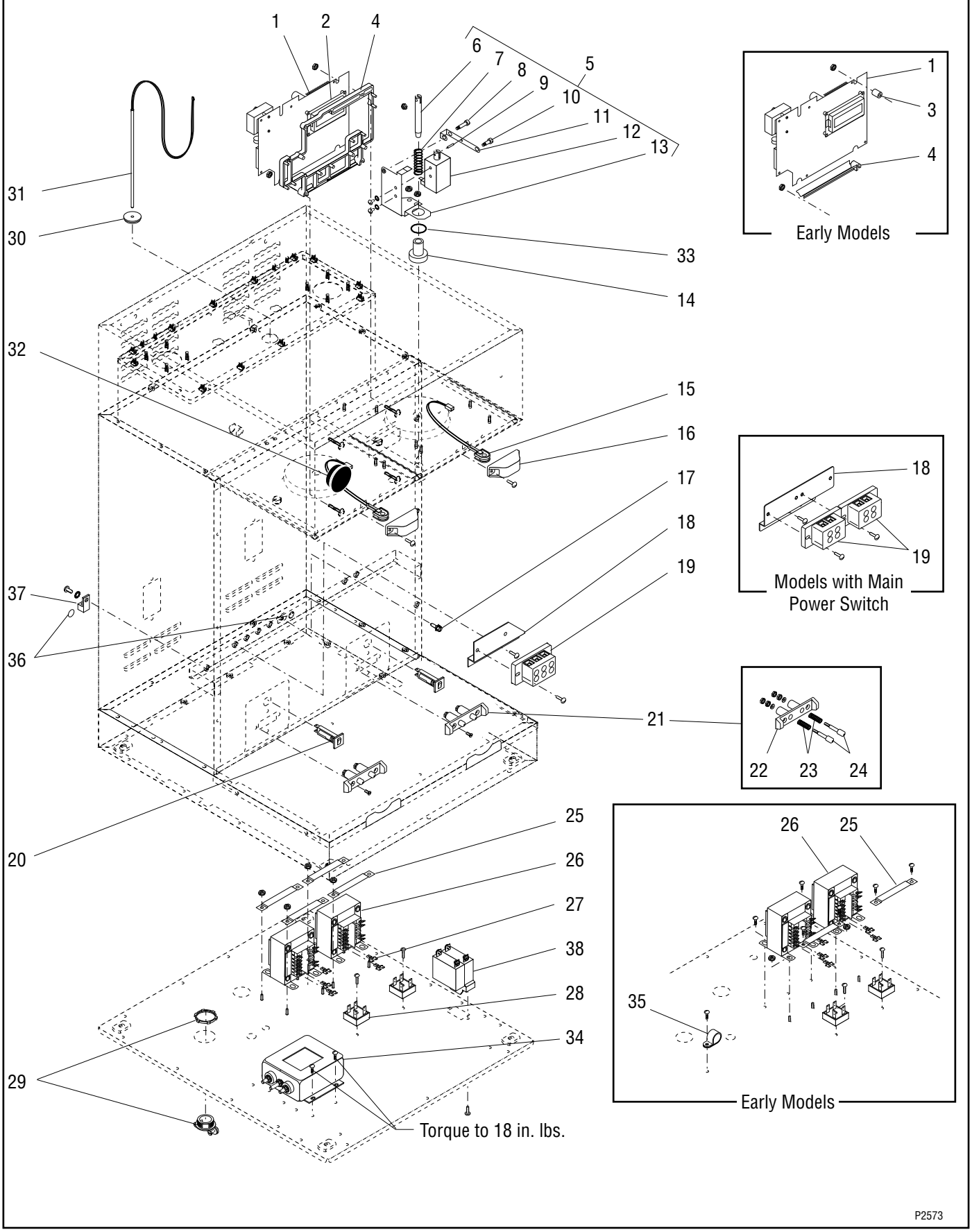

DIR Num: 29878.0003 06, November 2014

ELECTRICAL CONTROLS

ITEM	PART NO.	QTY.	DESCRIPTION
1	29969.1000	1	Circuit Board, Main control, 120/208V & 120/240V
	29969.1003	1	Circuit Board, Main control, 240V
	29969.1025	1	Circuit Board, Main control, 240V (Brewers with Product #33500.0027 only)
	29969.1051	1	Circuit Board, Main control, 120/240V (Brewers with Product #33500.0039 only)
	38358.1004	1	Circuit Board, Main Control, 240V RoHS (Brewers with Product #33500.0009 only)
	38358.1006	1	Circuit Board, Main control, 240V RoHS (Models with 17 hole Sprayhead)
	38358.1000	1	Circuit Board, Main control, 240V RoHS
	00973.0000	2	Nut, Keps #6-32
2	35493.1002	2	CBA, Display
3	01533.0010	2	Spacer .194" I.D. x .75"
4	29970.0000	1	Mount, Circuit Board (Early models)
	40726.0000	1	Mount, Circuit Board (Late models)
	00973.0000	2	Nut, Keps #6-32
5	29499.1000	2	Solenoid Assy 120V (Includes items 6 thru 13)
	29499.1001	2	Solenoid Assy 200/230V (Includes items 6 thru 13)
	00970.0000	4	Nut, Keps #8-32
6	29494.0000	2	Pin, Funnel Stop
7	28897.0000	2	Spring, Compression
8	29504.0001	2	Shoulder Screw
9	26247.0001	2	Pin, Spring
10	29504.0000	2	Shoulder Screw
	00991.0000	2	Nut, Elastic Lock #8-32
11	29493.0000	2	Lever
12	29503.0000	2	Coil, Solenoid 120/208V & 120/240V
	29503.0001	2	Coil, Solenoid 200/230V
	33613.0000	4	Screw, Truss Head #8-32 x .25"
13	29492.0000	2	Bracket, Solenoid
14	29495.0000	2	Guide, Pin
15	- - - - - - - -	2	Sensing Coil WO/Leads (Early models) (Not available order item 46)
	32572.1001	1	Sensing Coil W/Violet Leads (Includes plug below)
	32572.1002	1	Sensing Coil W/Yellow Leads (Includes plug below)
	20621.0000	2	Plug, hole .203" Dia. (Not illustrated)
16	32573.0000	2	Cover, Sensing Coil
	01382.0007	4	Screw, Truss Head #6-32 x .38"
17	01309.0000	1	Ground Screw W/Terminal Washer #10-32 x .50" (120/208V, 120/240V & 200V)
	01375.0000	1	Screw, Pan Head, Slotted, Brass #10-32 x .50" (230V)
	01512.0000	1	Lockwasher #10
18	21120.0000	1	Bracket, Terminal Block Mounting
	39248.0001	1	Bracket, Terminal Block Mounting (Models with Main Power Switch)
	02308.0000	2	Screw, Pan Head #8-32 x .38"
19	07038.0000	1	Terminal Block, 3 Pole (BLK/RED/WHI)
	01106.0001	1	Terminal Block, 2 Pole (BLK/RED)
	01106.0003	1	Terminal Block, 2 Pole (BLU/BRN)
	01317.0000	2	Screw, Truss Head #8-32 x .50"

(continued)

* Indicates the part number listed is for reference only. See DESCRIPTION for possible service replacement.

DIR Num: 29878.0003 06, November 2014

(continued)

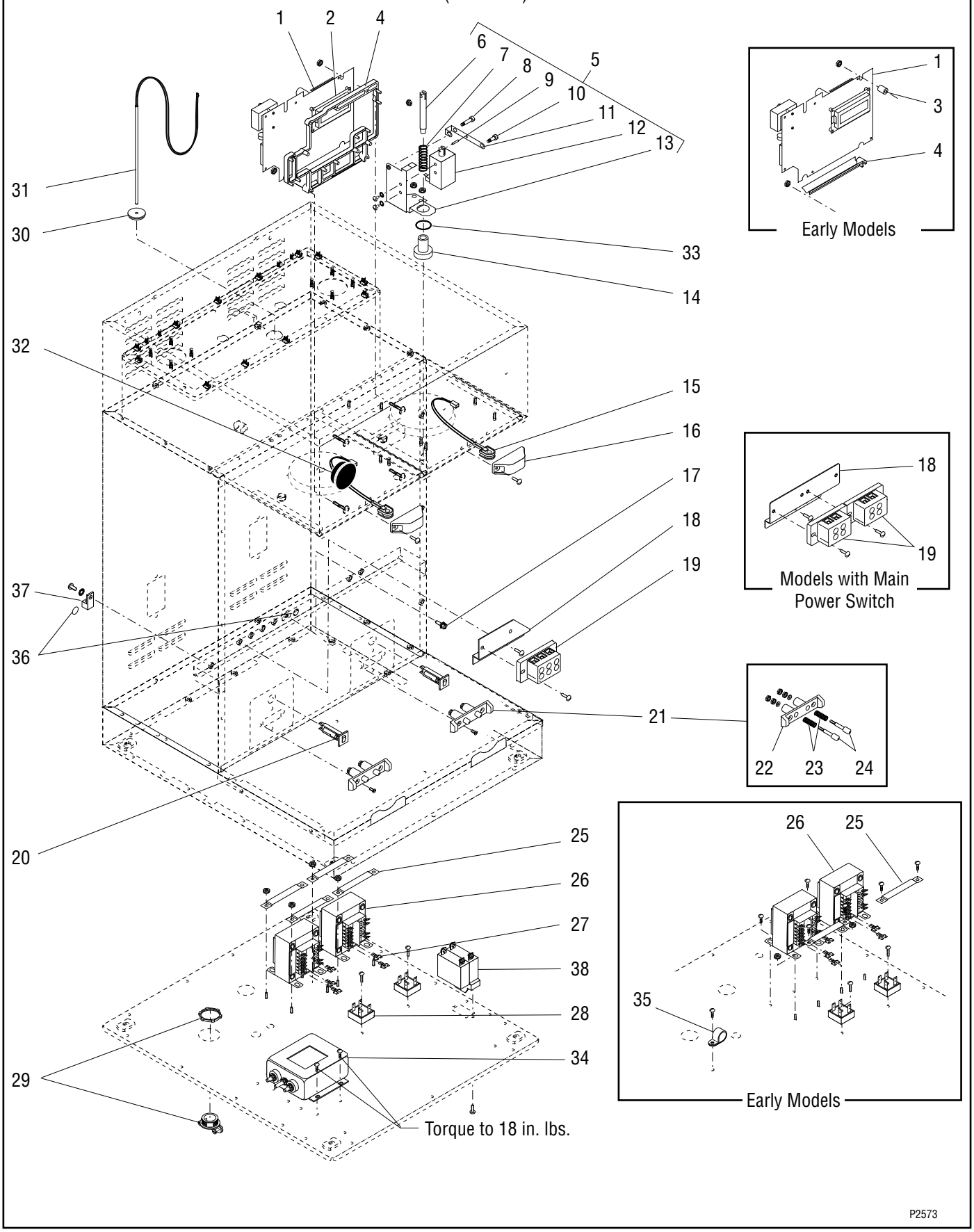

DIR Num: 29878.0003 06, November 2014

ELECTRICAL CONTROLS

ITEM	PART NO.	QTY.	DESCRIPTION
20	27181.0001	2	Circuit Breaker, 4 amp
21	27790.1000	2	Receptacle Assembly, Spring Contact (Includes items 22, 23 & 24)
	20608.0000	4	Screw, Flat Head #6-32 x .375" SST Black
22	27746.0000	1	Housing, Spring Contact
23	27788.0000	2	Spring
24	27748.0000	2	Pin, Contact
	01521.0000	2	Washer, Flat
	00973.0000	4	Nut, Keps #6-32 - Zinc Pl
25	28264.0000	4	Strap, Transformer Holddown (only 2 used on early models)
	01347.0000	4	Screw, Truss Head #6-32 x .375" (Early models)
	00970.0000	8	Nut, Keps #8-32 (Late models)
26	27253.0001	2	Transformer, 80VA (120/240V)
	29179.0001	2	Transformer, 115/230V CE (200V & 230V)
	01347.0000	4	Screw, Truss Head #6-32 x .375" (Early models)
27	26722.0000	5	Adapter, Spade
28	22126.0000	2	Rectifier
	02367.0000	2	Screw, Truss Head #6-32 x .625"
29	01590.0000	1	Connector, Cable (120/208V, 120/240V & Late 230V models)
	32833.0000	1	Strain Relief, Cord (Early 230V models)
	01531.0000	1	Washer, Reducing
	05746.0001	1	Strain Relief, Cord (Later 230V models)
30	12570.0000	1	Grommet, Temperature Sensor
31	29327.0000	1	Probe Kit, Temperature/Dry Plug
32	32018.0000	1	Bumper
33	01530.0000	2	Washer, Split (Models with 3 piece Sprayhead Panel only)
34	29446.0002	1	EMI Filter, 30amp (200V & 230V)
	01347.0000	4	Screw, Truss Head #6-32 x .375"
	01510.0000	1	Lockwasher, Ext. tooth #6, Zinc Plated
35	00610.0000	1	Clamp, Cable Nylon (Early models)
	01347.0000	1	Screw, Truss Head #6-32 x .375"
36	00824.0002	2	Decal, Grounding
37	27705.0000	1	Terminal Lug #6-14 AWG (230V)
	01327.0000	1	Screw, Pan Head, Slotted #10-32 x .38"
	01512.0000	1	Lockwasher, Ext. tooth #10, Zinc Plated
38	38894.0001	1	Switch, Main Power (Not used on all models)
	01308.0002	2	Screw, Truss Head #6-32 x .25" (Switch Mounting)
	01327.0000	4	Screw, Pan Head #10-32 x .375"
	01512.0000	4	Lockwasher, External Tooth #10

(continued)

* Indicates the part number listed is for reference only. See DESCRIPTION for possible service replacement.

DIR Num: 29878.0003 06, November 2014

(continued)

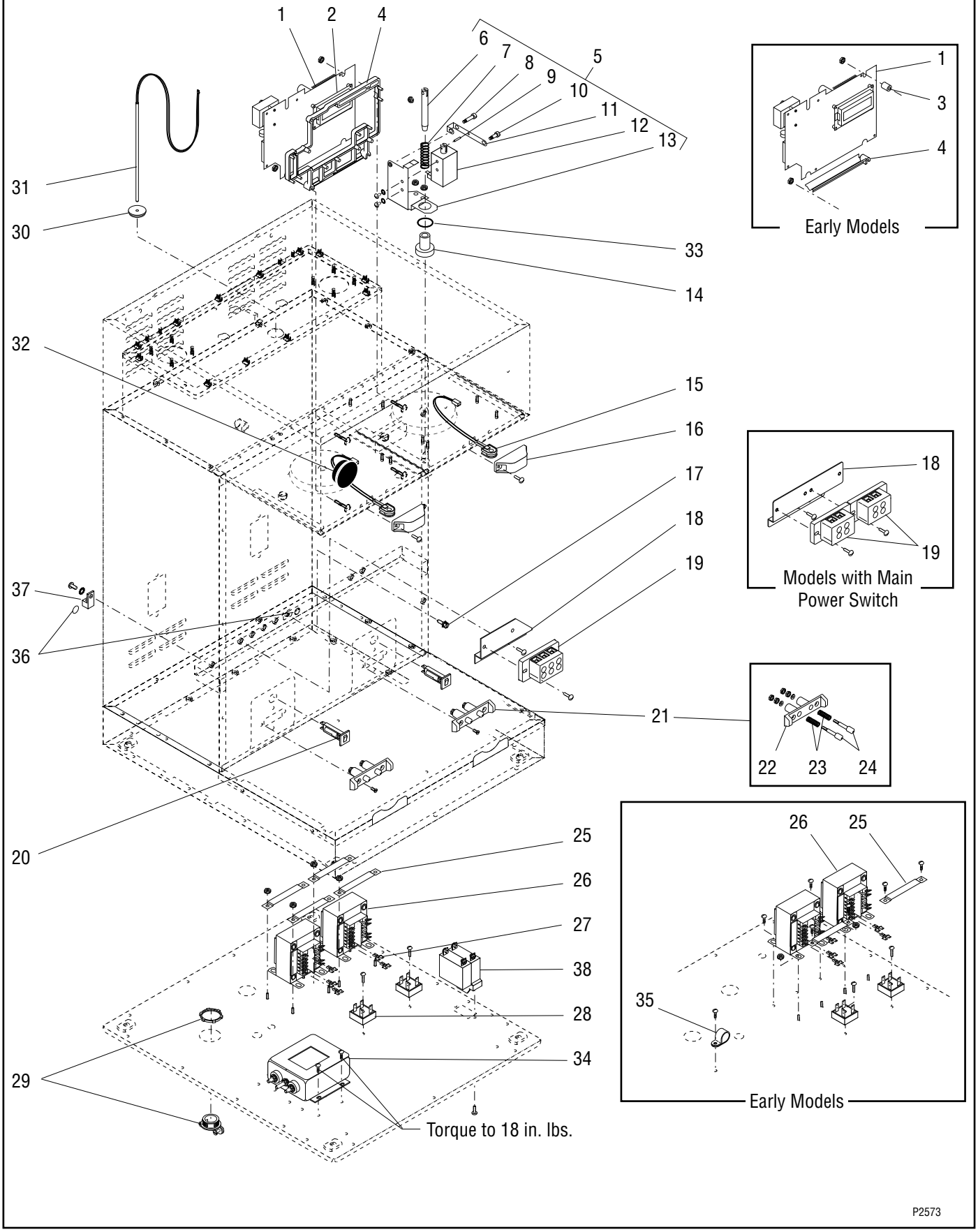

DIR Num: 29878.0003 06, November 2014

ELECTRICAL CONTROLS

ITEM	PART NO.	QTY.	DESCRIPTION
	Note: The following parts are not illustrated		
39	33634.0001	1	Wiring Harness, Main, 120/208V & 120/240V (Brewers prior to 08/01/05)
	33634.0040	1	Wiring Harness, Main, 120/208V & 120/240V (Brewers after 08/01/05)
	33634.0006	1	Wiring Harness, Main, 200V (Brewers prior to 08/01/05)
	33634.0041	1	Wiring Harness, Main, 200V (Brewers after 08/01/05)
	33634.0009	1	Wiring Harness, Main, 200V (Brewers with Product #33500.0027 only)
	33634.0002	1	Wiring Harness, Main, 230V (Brewers prior to 08/01/05)
	33634.0015	1	Wiring Harness, Main, 230V (Brewers after 08/01/05 without Backflow Prevention)
	33634.0034	1	Wiring Harness, Main, 230V (Brewers with Backflow Prevention)
40	27791.0001	1	Wiring Harness, Server Contacts (Left) (120/208V & 120/240V)
	27791.0002	1	Wiring Harness, Server Contacts (Right) (120/208V & 120/240V)
	27791.0004	1	Wiring Harness, Server Contacts (Left) (200V & 230V)
	27791.0005	1	Wiring Harness, Server Contacts (Right) (200V & 230V)
41	37859.0005	1	Wiring Harness, Main Power Switch
42	00603.0000	2	Clamp, Cable .438" I.D.
	02308.0000	2	Screw, Pan Head #8-32 x .38"
43	27945.0005	1	Thermal Cut-off w/Leads, Red 51" 230V (Brewers without Backflow Prevention)
	27945.0015	1	Thermal Cut-off w/Leads, Red 61" 230V (Brewers without Backflow Prevention)
44	34707.0000	1	Wiring Harness, EMI Filter, 230V
	34707.0002	1	Wiring Harness, EMI Filter, 200V
45	04831.0000	1	Clamp, Routing-Vinyl Dipped
46	38338.0000	-	Kit, Funnel Sensors (Includes left and right Funnel Sensor Coils W/Leads)

* Indicates the part number listed is for reference only. See DESCRIPTION for possible service replacement.

DIR Num: 29878.0003 06, November 2014

FUNNEL

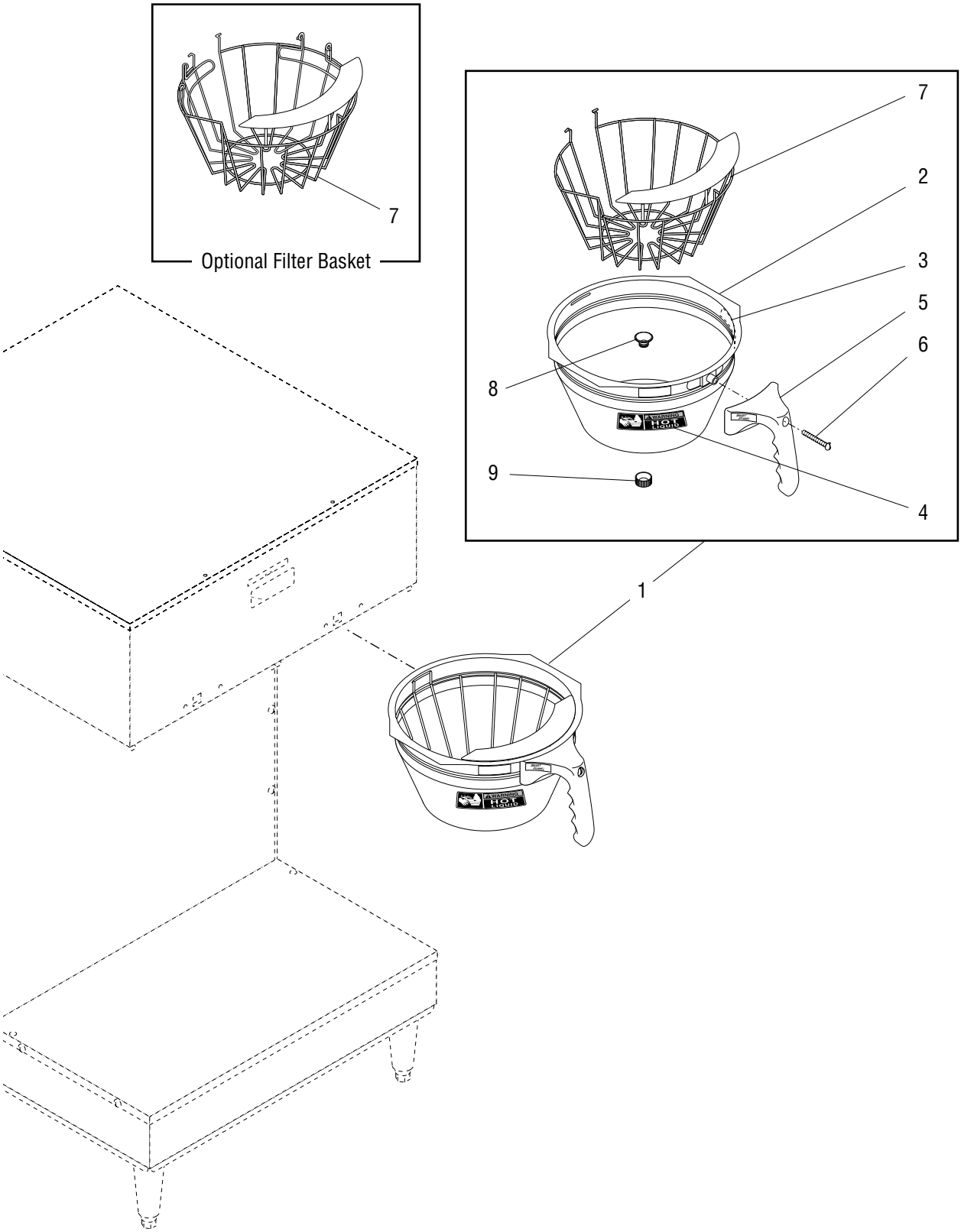

P2340

DIR Num: 29878.0003 06, November 2014

FUNNEL

ITEM	PART NO.	QTY.	DESCRIPTION
1	32643.0000	2	Funnel Assy, SST
	32643.0010	2	Funnel Assy W/D-Ring Basket, SST (Optional)
2	24462.0002	1	Funnel W/Decals (Includes items 3 & 4)
3	03408.0004	1	Decal, Warning-Remove Funnel
4	03409.0004	1	Decal, Warning-Hot Liquid
5	32595.0000	1	Handle, Funnel-Black
6	12499.0002	1	Screw, Round Head .25" - 20 x 1.50" BLK
7	33089.0000	1	Filter Basket w/Splash Guard
	33089.0001	1	Filter Basket w/Splash Guard & D-Rings (Optional)
8	32139.0000	1	Insert, Funnel Tip - Male (Refer to item 10)
9	32140.0000	1	Insert, Funnel Tip - Female (Refer to item 10)
10	01031.0001	-	Funnel Tip Kit (Includes items 8 & 9)

Each includes Items 2 thru 9

* Indicates the part number listed is for reference only. See DESCRIPTION for possible service replacement.

DIR Num: 29878.0003 06, November 2014

NUMERICAL INDEX

PART NO.	PAGE NO.
00310.0002	13,15
00400.0001	13
00402.0001	13
00436.0001	13,15
00459.0000	13,15
00463.0000	13,15
00502.0000	7
00603.0000	27
00610.0000	25
00619.0007	5
00620.0000	13,15
00656.0001	5
00658.0000	5
00669.0002	5
00824.0002	25
00908.0000	9,11
00916.0000	5
00935.0000	13,15
00942.0000	21
00946.0000	9
00950.0000	13,15
00970.0000	7,17,23,25
00971.0000	9,11
00973.0000	23,25
00986.0000	5
00991.0000	23
01031.0001	29
01075.0000	19
01079.0000	13,15
01082.0002	19
01082.0003	19
01085.0000	13
01085.0002	13
01085.1006	13
01085.1007	13,15
01100.0000	13,15
01101.0000	13
01106.0001	23
01106.0003	23
01111.0000	13,15
01111.0002	13
01116.0000	13,15
01171.0001	15
01308.0002	25
01309.0000	23
01315.0000	13
01315.0006	11
01317.0000	23
01317.0003	11
01317.0005	11
01327.0000	13,15,25
01347.0000	7,25
01347.0002	7
01375.0000	23
01382.0003	5,7
01382.0007	5,7,9,23
01501.0000	9
01502.0000	13,15
01510.0000	25
01512.0000	23,25
01519.0000	13
01520.0000	9
01521.0000	25
01530.0000	25
01531.0000	25
01532.0000	13,15
01532.0005	21
01533.0006	23
01533.0010	23
01590.0000	25
01975.0000	13
02308.0000	
	5,7,11,13,15,23,27
02328.0003	9
02329.0000	13
02336.0000	5
02336.0002	5
02367.0000	25
02434.0010	9
02434.1000	9
02536.0000	9,13,15
02594.0000	21
02595.0000	21
02596.1005	21
02766.0000	21
02850.0000	21
02854.0000	21
02856.0002	21
02858.0000	21
02861.0003	21
03236.0007	9
03236.1001	9
03236.1002	9
03236.1003	9
03408.0004	29
03409.0004	29
03633.0000	9
03803.0000	9
03803.0002	9
03807.0000	9
03851.0000	9
03996.0000	7
04797.0000	9
04831.0000	27
05746.0001	25
05749.0004	5
07038.0000	23
11517.0008	19
11630.0001	11
12249.0001	7
12249.0007	7
12305.1000	9
12398.0002	9
12422.0000	9
12422.0001	17,19,21
12422.0005	17
12422.0008	19
12422.0009	11,17
12437.0000	21
12499.0002	29
12565.0028	9
12565.0029	9
12565.0013	9
12565.0029	9
12570.0000	25
13054.0000	19
13255.0002	7
13255.0003	7
20201.4301	13
20201.5600	5
20202.1601	21
20203.0100	9
20541.0001	9
20608.0000	25
20621.0000	23
20878.1008	11
20881.0001	11
20883.0000	11
20921.1000	5
20921.1003	5
20922.1000	9
20922.1002	9
20936.1000	9
20937.0000	13,15
20951.1000	11
20976.0001	17
20976.0003	17,21
20976.0006	17,19
20976.0036	21
20976.0045	17
20976.0057	17
20976.0058	17
20976.0059	21
20976.0066	19
20976.1000	17,19,21
20976.1001	17,19,21
20976.1002	17,19,21
20977.1000	13
20977.1002	15
21120.0000	23
21136.0001	19,21
21180.0001	13
21181.0000	13
21537.0001	7
21537.0003	7
21801.0002	9
22126.0000	25
22249.0000	13
22305.0000	19
22305.0002	19
22305.0003	19
22728.0000	9
23254.0000	19
23255.0000	19
23256.0000	19
23717.0003	9
23721.0000	13
23820.1000	13
24462.0002	29
24613.0001	15
24684.0000	15
25134.0000	13
25134.0001	13
25151.0000	5
25376.0002	5
26247.0001	23
26504.0000	7
26528.0000	7
26622.0001	9
26722.0000	25
26826.0000	11
26829.0000	11
26835.1000	5
26846.0000	19
26846.0001	19
26846.0002	19
26924.0000	19
26949.0001	7
27083.0000	13
27181.0001	25
27253.0001	25
27370.0000	17
27370.0001	17
27370.0002	17
27473.0000	9
27574.0000	21
27705.0000	25
27746.0000	25
27748.0000	25
27760.0002	7
27760.0004	7
27761.1001	5
27761.1002	5
27761.1003	5
27761.1005	5
27765.0000	5
27765.0001	5
27765.0003	5
27765.0006	5
27788.0000	25
27790.1000	25
27791.0001	27
27791.0002	27
27791.0004	27

NUMERICAL INDEX

PART NO.	PAGE NO.
27791.0005	27
27945.0005	27
27945.0015	27
28005.0000	13
28020.0000	13
28021.0000	13
28264.0000	25
28309.0000	13
28479.0000	13
28480.0000	13
28481.0000	13
28706.0002	21
28897.0000	23
29075.0000	21
29179.0001	25
29327.0000	25
29384.0000	7
29421.0000	11
29446.0002	25
29492.0000	23
29493.0000	23
29494.0000	23
29495.0000	23
29499.1000	23
29499.1001	23
29503.0000	23
29503.0001	23
29504.0000	23
29504.0001	23
29876.0015	5
29876.0001	5
29876.0003	5
29876.0009	5
29889.1000	5
29889.1001	5
29969.1000	23
29969.1003	23
29969.1025	23
29969.1051	23
29970.0000	23
29974.0000	5
29974.0006	5
32018.0000	25
32241.0000	11
32242.0000	11
32242.0002	11
32323.0002	7
32572.1001	23
32572.1002	23
32573.0000	23
32591.0007	17
32591.0009	17
32591.0011	11
32591.1000	17
32591.1002	11
32595.0000	29
32643.0000	29
32643.0010	29
32648.0000	17
32649.0000	7
32833.0000	25
33089.0000	29
33089.0001	29
33613.0000	23
33634.0001	27
33634.0002	27
33634.0006	27
33634.0009	27
33634.0040	27
33634.0015	27
33634.0041	27
34707.0000	27
34707.0002	27
34867.0004	19
34867.0005	19
34868.0000	19
34956.0000	19
34956.0001	19
35052.0001	19
35052.1000	19
35070.0001	19
35086.0000	11
35308.1004	19
35308.1005	19
35334.0000	7
35334.0001	7
35334.0002	7
35388.1004	5
35388.1005	5
35439.1000	11
35476.0000	9
35477.0000	9
35493.1002	23
35793.0001	5
36398.0000	7
37526.0000	11
37859.0005	27
37881.0000	5
38338.0000	27
38358.1000	23
38358.1004	23
38358.1006	23
38894.0001	25
38936.0000	5
38936.0001	5
38936.0002	5
38936.0003	7
38936.0005	7
38936.0007	5
38936.0011	7
38936.1001	7
38936.1005	7
38949.0000	13
39248.0001	23
39803.0000	7
40726.0000	21
41259.1003	9
41266.0000	9
41280.0001	9
50417.0000	7
M2517.0000	21
M2522.1000	9

DIR Num: 29878.0003 06, November 2014