VPR Series

Pourover Coffee Brewers

Supercedes Illustrated Parts Catalogs: 29999.0000, 39065.0000.

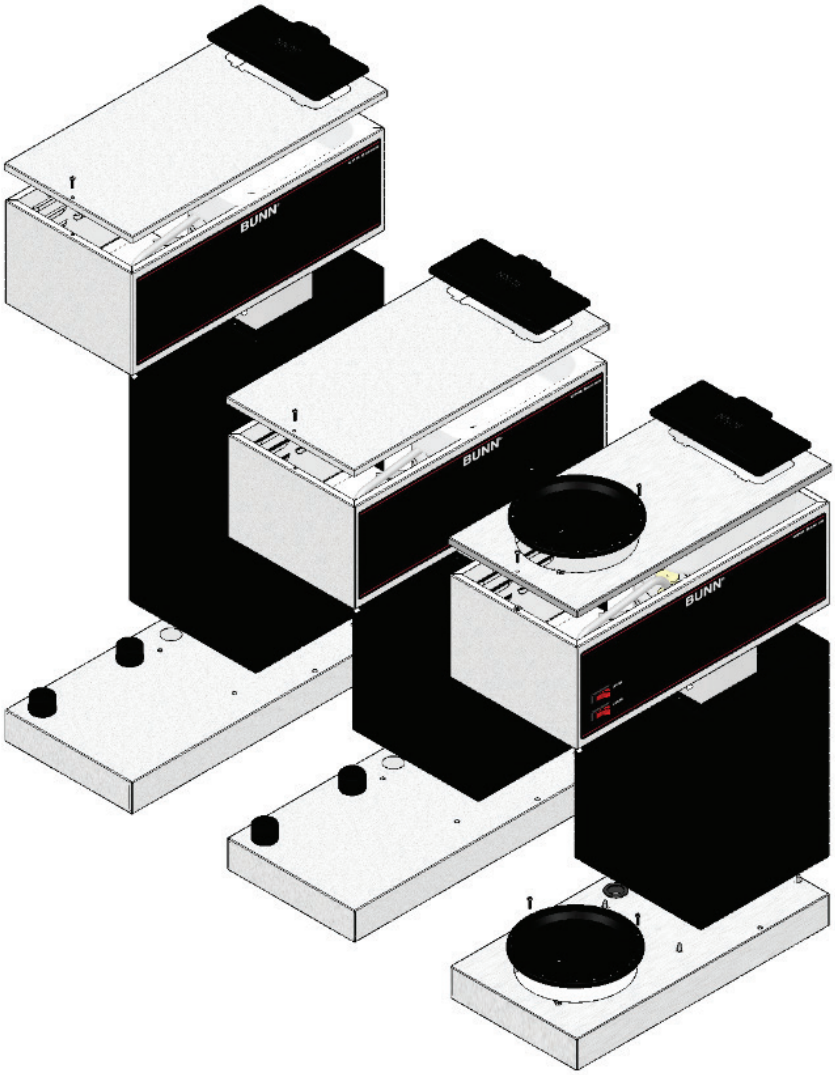

ILLUSTRATED PARTS CATALOG

Designs, materials, weights, specifications, and dimensions for equipment or replacement parts are subject to change without notice.

BUNN
5020 Ash Grove Drive, Springfield, Illinois USA 62711
Phone (217) 529-6601, Technical Support Phone (800) 420-2866
www.bunn.com

40667.0000 J 08/26 © 2007 - 2026 BUNN Commercial LP

BUNN COMMERCIAL PRODUCT WARRANTY

Warranty statements and information can be found on our website. Please visit https://commercial.bunn.com/support/warranty-lookup for further details.

TABLE OF CONTENTS

Trunk, Base and Panels 4
Hood, and Top Covers 6
Fill Basin 8
Early Tank and Components 10
3 Tab Tank and Components 12
Funnels, Pitcher and Filter Basket 14
Warmers and Galley Kit 16

Fraction	Decimal	Fraction	Decimal
1/16	0.063	**9/16**	0.563
1/8	0.125	**5/8**	0.625
3/16	0.188	**11/16**	0.688
1/4	0.250	**3/4**	0.750
5/16	0.313	**13/16**	0.813
3/8	0.375	**7/8**	0.875
7/16	0.438	**15/16**	0.938
1/2	0.500	**1**	1.000

TIPS:



To **Search/Find** content in this document, use "**Ctrl+F**" (PC)



To **Search/Find** content in this document, use "**command+F**" (Mac)

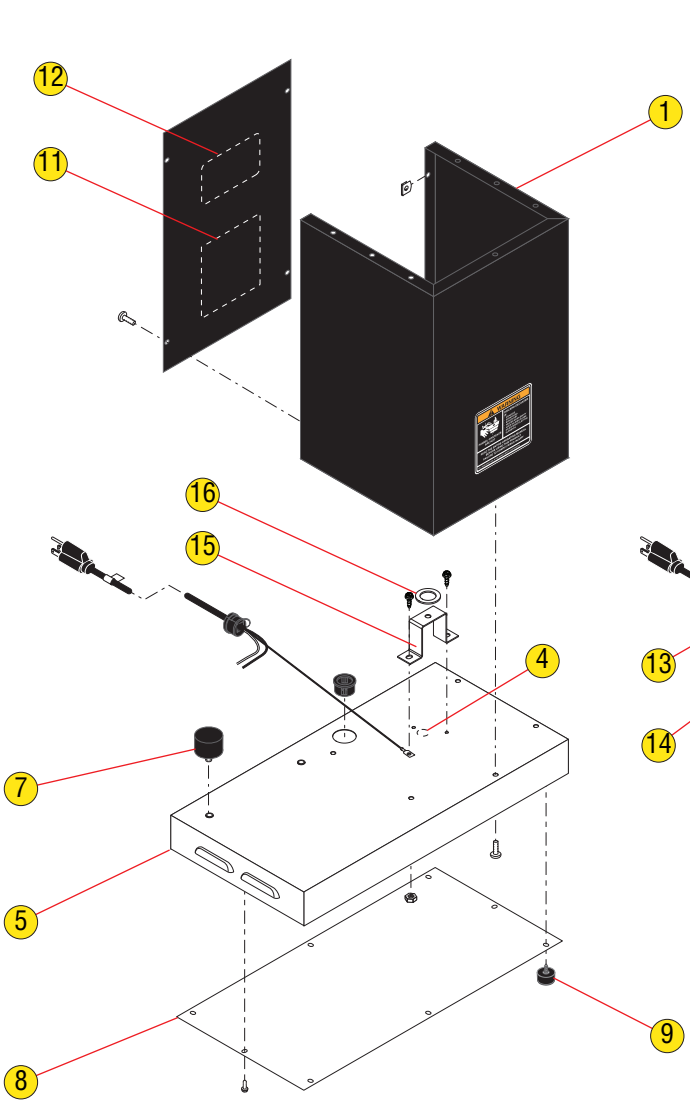

TC Model

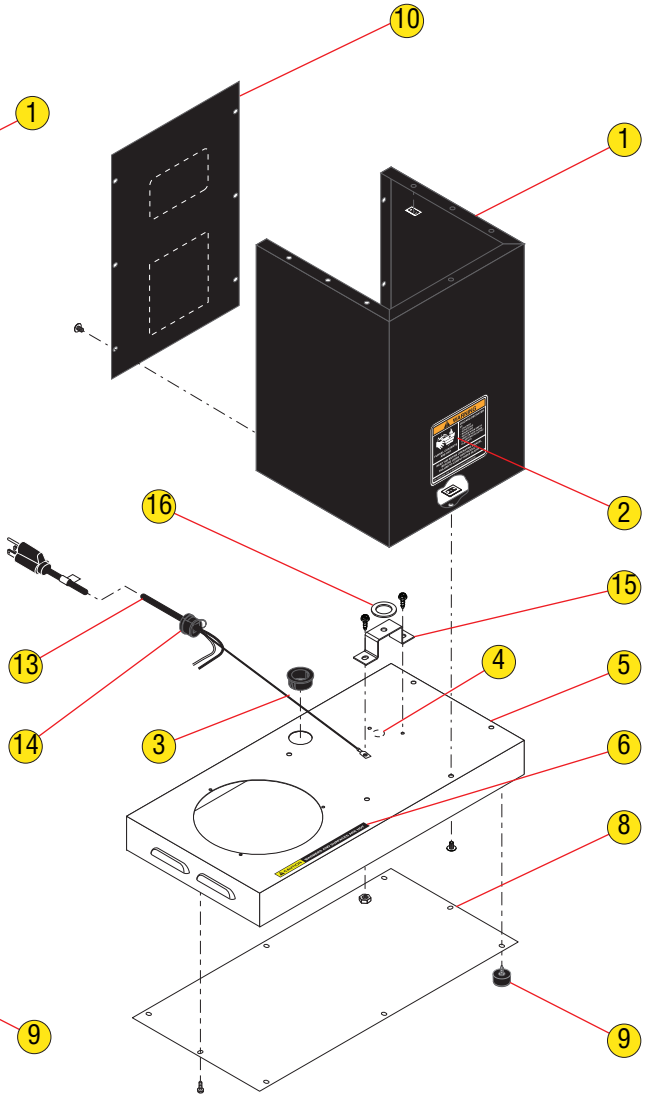

Warmer Model

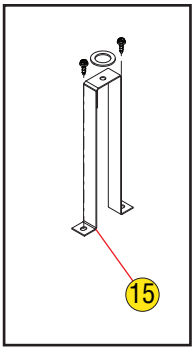

APS Models

P3935

TRUNK, BASE AND PANELS

ITEM	PART NO.	QTY.	DESCRIPTION
1	33211.1005	1	Housing W/Decal, Trunk (Includes # 2) (TC Models)
	33767.0000	1	Housing W/Decal, Trunk (Includes item 11) (VPR w/Warmers)
2	00658.0000	1	Decal, Caution - Decanter/Funnel
3	01592.0000	1	Bushing, Snap - 1.0" Dia (Late Models)
	01663.0000	1	Bushing, Snap - .875" Dia (Early Models)
4	00824.0002	1	Decal, Ground
5	39002.0002	1	Housing, Base APS/TC
	33766.0000	1	Housing, Base w/Warmer
	36154.0000	5	Screw, Hex Hd, Sltd. #8-32 x .38"
6	12364.0000	1	Decal, CAUTION-WARMERS ARE HOT
7	00754.0001	2	Locator, Blk .25"-20 x 1.25" (APS/TC Only)
8	33210.0000	1	Cover, Base
	02332.0002	4	Screw, Hex-Crimptite #6-32 x .375"
9	04198.0001	-	Kit, Foot (Set of 4)
10	33768.0000	1	Panel W/Decals, Rear (Includes # 11, 12) (Warmer Models)
	02322.0002	6	Screw, Truss Head Blk #8-32 x .375"
	00917.0000	6	Fastener, J Type #8-32
11	00831.0000	1	Decal, Warning-Electrical
12	37881.0000	1	Decal, Warning No Serviceable Parts
13	01637.0000	1	Cord Assembly, Power
	00908.0000	1	Nut, Hex 8-32
	20203.0100	1	Lock Washer
14	01686.0000	1	Bushing, Strain Relief - Nylon
15	39777.0000	1	Bracket, Tank Support (Warmer Model)
	39777.0002	1	Bracket, Tank Support (TC Model)
	40157.0000	1	Bracket, Tank Support (APS Model)
	36154.0000	2	Screw, Hex Hd, Sltd. #8-32 x .38"
16	01201.0000	1	Gasket

Used Only In Late Models w/New 3 Tab Tank

First Style

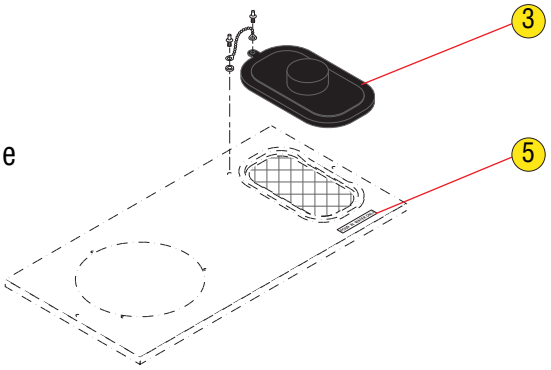

TC/APS Models

Warmer Model

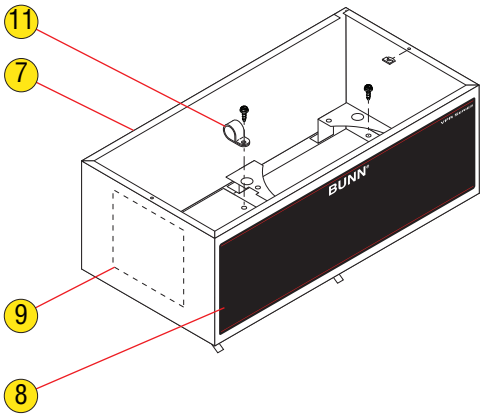

Second Style

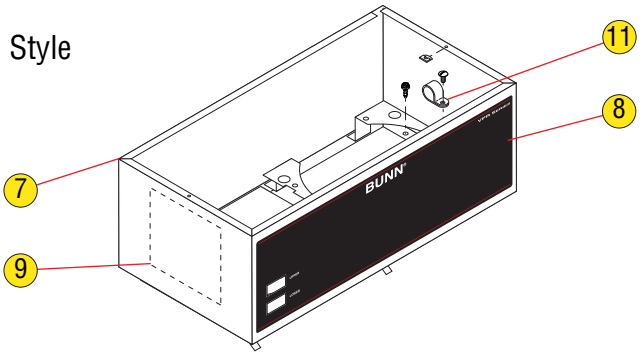

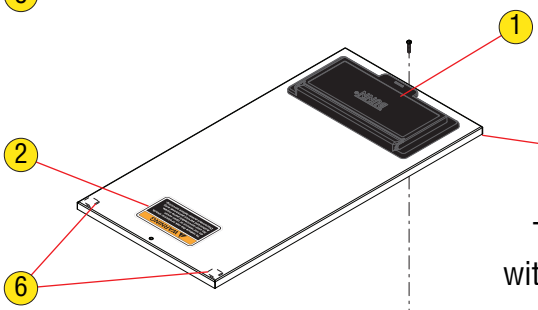

Third Style
with 3 Tab Tank

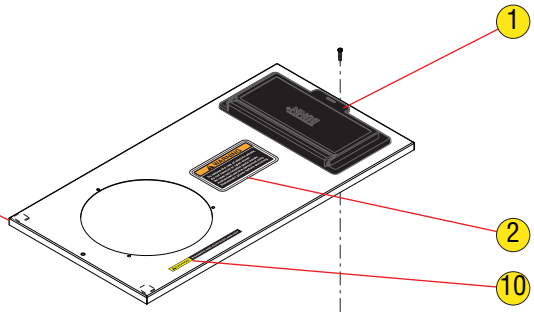

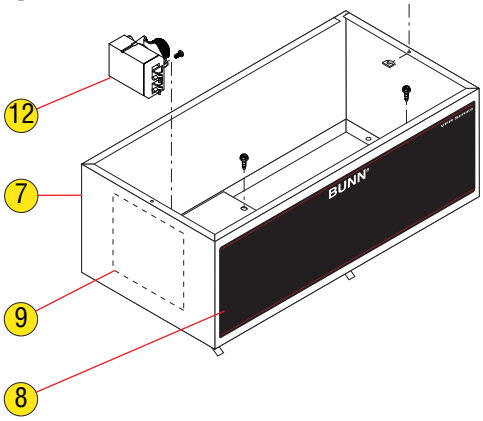

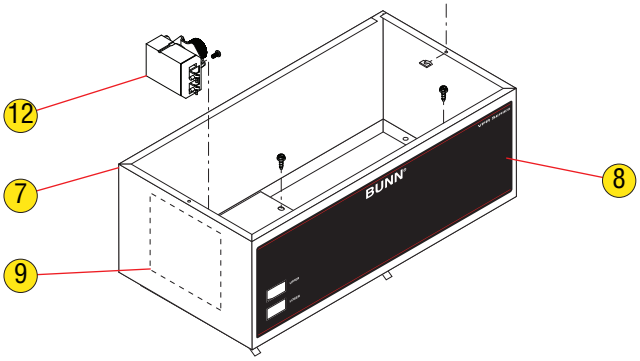

P3936.40

HOOD AND TOP COVER

ITEM	PART NO.	QTY.	DESCRIPTION	
1	38498.1000	1	Flip Lid Assy (Includes items 2 and 3)	
2	37881.0000	1	Decal, Warning No Serviceable Parts	
3	12981.0001	1	Lid/Chain Kit	
4	37985.1003	1	Cover Assembly, Top (TC/APS) (Includes # 1,2,6)	
	33797.0000	1	Cover Assembly, Top (Warmer Model) (Includes # 1,2,6, 10)	
	01303.0000	2	Screw, Pan Head #4-40 x .50"	
	00916.0000	2	Fastener, J-Type #4-40	
5	00833.0000	1	Decal, Pour In Water Only (*Not Used On Late Models*)	
6	29894.0000	2	Pad, Adhesive	
7	36154.0000	5	Screw, Hex Hd, Sltd. #8-32 x .38"	
	33094.1001	1	Hood Assembly, (Includes # 8, 9) APS/TC	(3 Tab Tank)
	37007.0001	1	Hood Assembly, (Includes # 8, 9) Warmer Model	(3 Tab Tank)
	36154.0000	6	Screw, Hex Hd, Sltd. #8-32 x .38"	
8	33214.0000	1	Decal, Control Panel (w/Switches)	
	33214.0003	1	Decal, Control Panel (No Switches)	
9	33769.0000	1	Decal, Schematic-Electrical	
10	12364.0000	1	Decal, CAUTION-WARMERS ARE HOT	
11	00603.0000	1	Clamp	
	01315.0000	1	Screw, Truss Head #8-32 x .38”	
12	02542.0000	1	Thermostat (3 Tab Tank)	
	01311.0000	2	Screw, Truss Head (SST) 8-32 x .25”	
	00720.0000	1	Knob	

Note: The following items are not illustrated

13	33964.0002	1	Wiring Harness, 120V (Warmer Model) 3 Tab Tank	
	33964.0003	1	Wiring Harness, 120V (APS/TC Model) 3 Tab Tank	

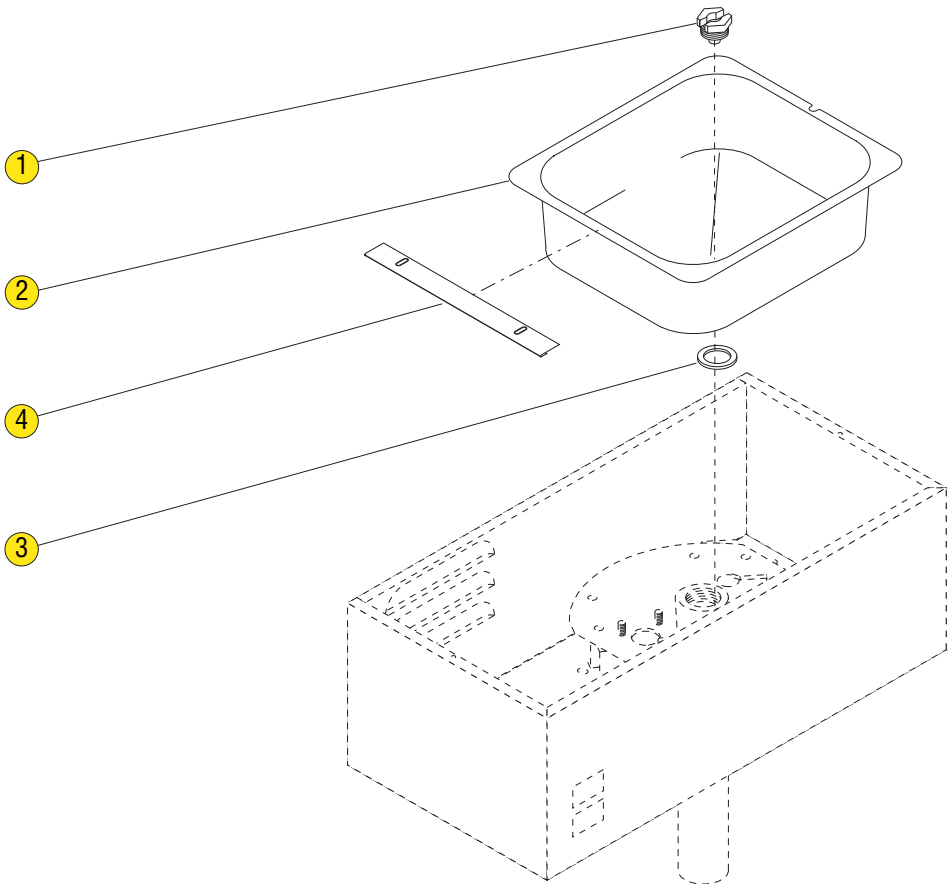

P 553.50

FILL BASIN

ITEM	PART NO.	QTY.	DESCRIPTION
1	01200.0000	1	Fitting, Tank Inlet .562˝ Opening
2	06220.0000	1	Fill Basin (SST)
3	01201.0000	1	Gasket, Tank Inlet
4	11424.0000	1	Plate, Splash Guard

TANK AND COMPONENTS - EARLY MODELS

VPR SERIES

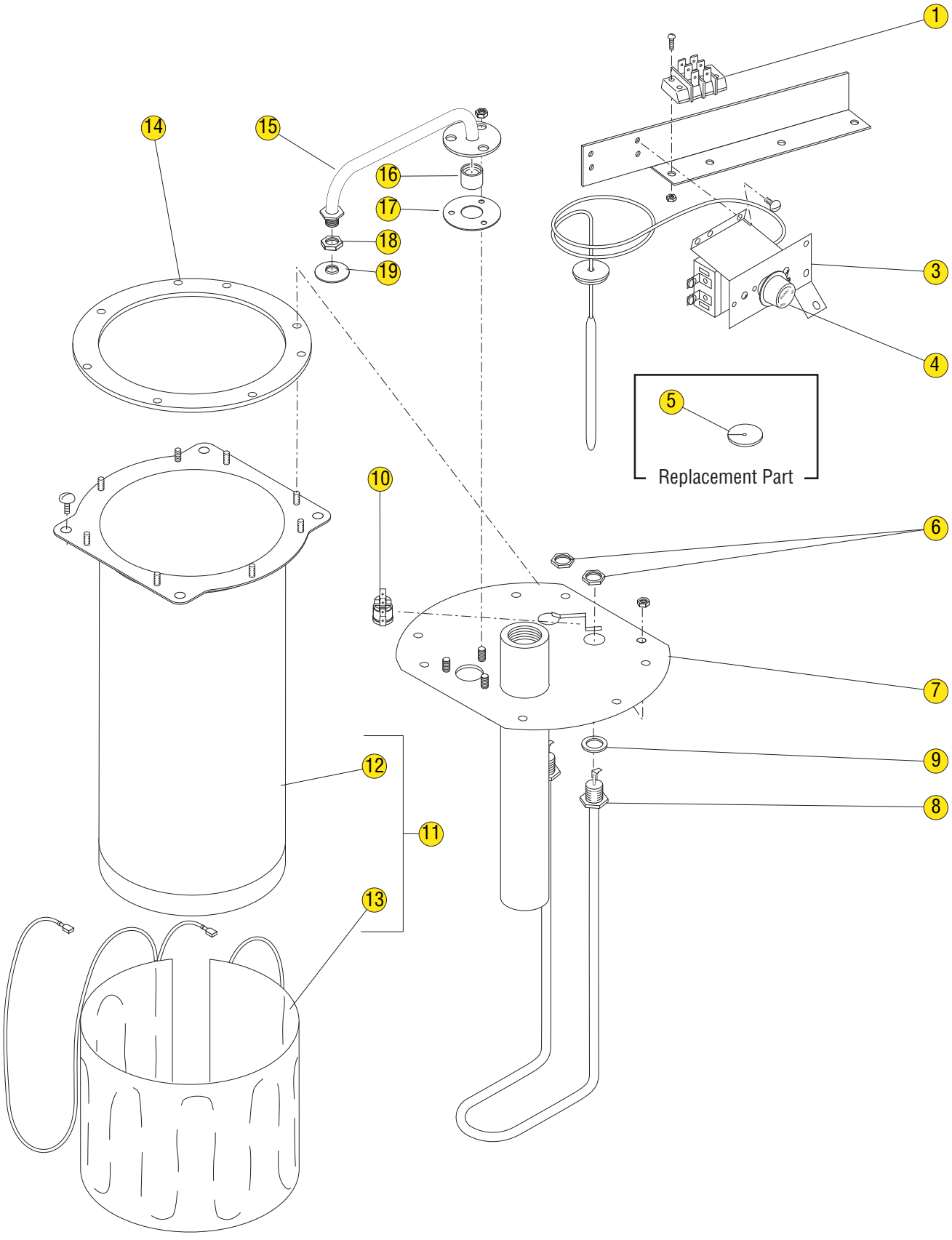

P554.80

TANK AND COMPONENTS - EARLY MODELS

ITEM	PART NO.	QTY.	DESCRIPTION
1	04309.0000	1	Terminal Block
	01390.0000	2	Screw, Round Head (SST) 8-32 x .62”
	00970.0000	2	Nut, Keps 8-32
2			
3	28319.0000	1	Thermostat Kit (Includes items 4 & 5)
	01311.0000	2	Screw, Truss Head (SST) 8-32 x .25”
	20762.0000	2	Screw, Binding Head 8-32 x .25” (Terminal Screws)
4	00720.0000	1	Knob, Thermostat
5	07073.1000	1	Grommet, Thermostat
6	00942.0000	2	Nut, Hex - Brass .50”-20
7	05545.0000	1	Tank Lid Assembly
	00908.0000	8	Nut, Hex 8-32
8	04236.1000	1	Tank Heater Kit 1320W 120V (Includes item 9)
9	00943.0000	2	Gasket, Tank Heater
10	29329.1000	1	Thermostat, Limit
11	04119.0001	1	Tank W/Blanket Warmer 120V (Includes items 12 & 13)
12	04118.0000	1	Tank
13	20264.0000	1	Blanket Warmer, 55W 120V
14	04221.0000	1	Gasket, Tank Lid
15	05555.0002	1	Sprayhead Tube Kit (Includes 3 mounting nuts below, items 16 & 17)
	00908.0000	3	Nut, Hex 8-32
16	05518.0000	1	Hub, Syphon
17	05515.0000	1	Gasket, Sprayhead Tube
18	01075.0000	1	Nut, Hex .438”-20
19	01082.0000	1	Sprayhead, 6-Hole
Note: The following items are not illustrated			
20	21016.0005	1	Lead, Elec - Wht 12” Terminal Block to Heater
21	21016.0303	1	Lead, Elec - Blk 10” Terminal Block to Control Thermostat
22	21016.0079	1	Lead, Elec - Blu/Blk 23” Control Thermo to Limit Thermostat
23	21016.0008	1	Lead, Elec - Blk 4” Limit Thermo to Tank Heater

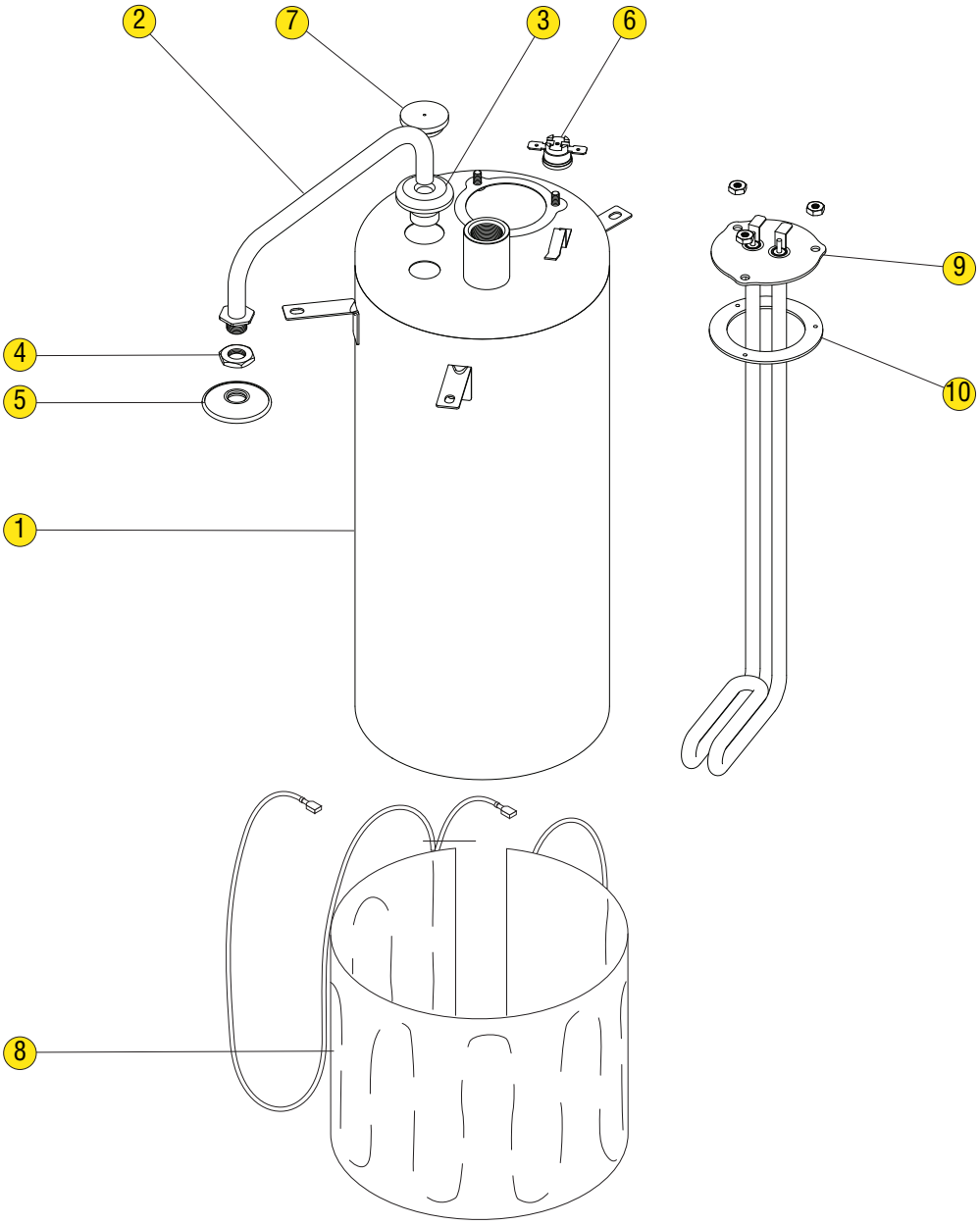

P3937.80

3 TAB TANK AND COMPONENTS

ITEM	PART NO.	QTY.	DESCRIPTION
1	39598.0002	1	Tank
2	05555.0001	1	Kit, Sprayhead Tube (Includes Grommet)
3	37376.0004	1	Grommet, Sprayhead Tube
4	01075.0000	1	Nut, Hex .438”-20
5	01082.0000	1	Sprayhead, 6-Hole
6	29329.1000	1	Thermostat, Limit
7	07073.1000	1	Grommet, Thermostat
8	20264.0000	1	Blanket Warmer, 55W 120V
9	39294.1002	1	Tank Heater Kit 1320W 120V (Includes Gaskets)
	00908.0000	3	Nut, Hex 8-32
10	39590.0000	1	Gasket, Tank Heater

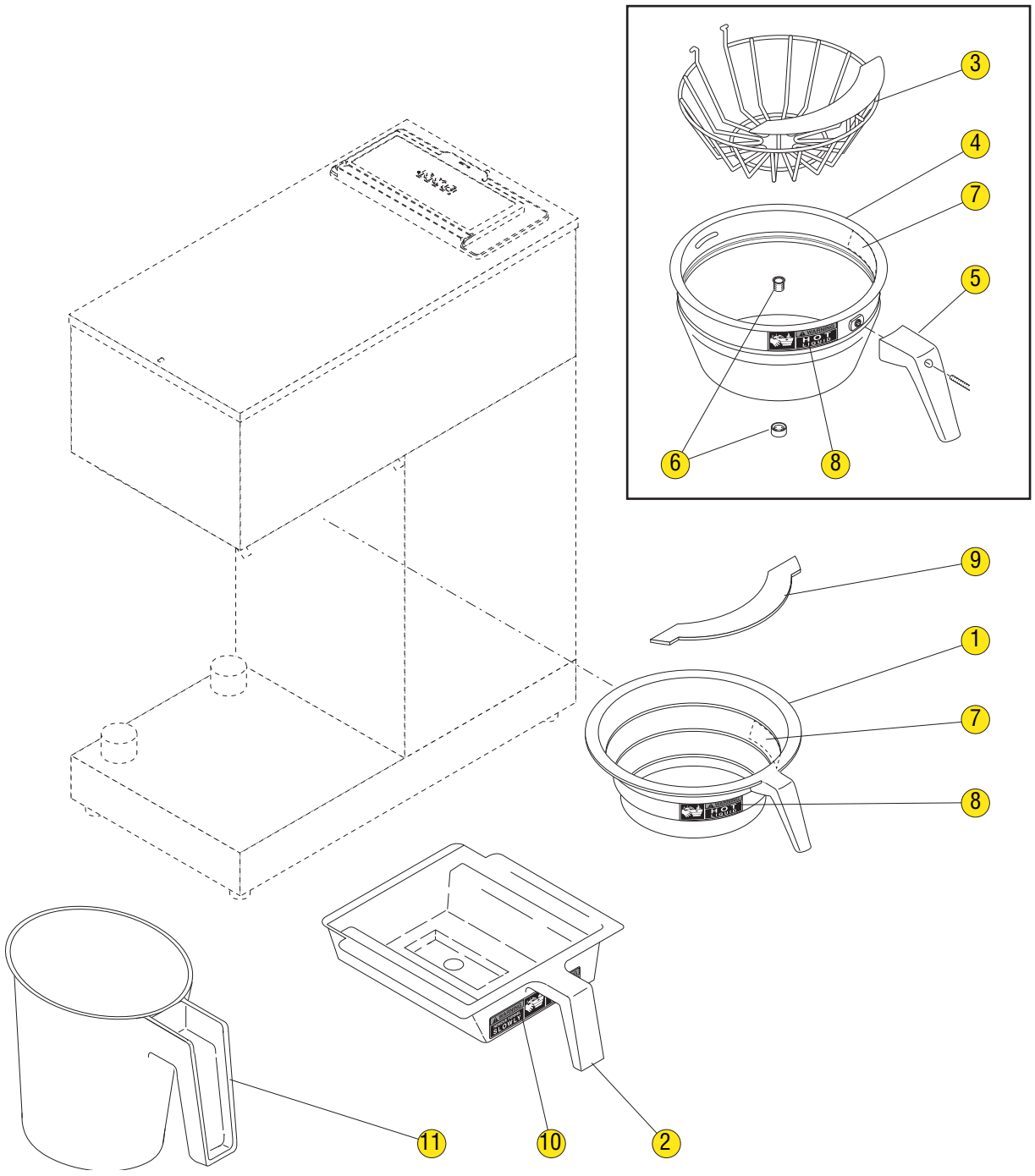

P3599.60

FUNNELS, PITCHER AND FILTER BASKET

ITEM	PART NO.	QTY.	DESCRIPTION
1	20583.0003	1	Funnel W/Decals, Plastic - Blk — Includes items 7, 8 & 9
	20583.0006	1	Funnel W/Decals, Plastic - Orn
	20216.0000	1	Funnel, SST W/Black Handle (7.125" Dia.) (Includes Items 3 thru 8)
	20216.0001	1	Funnel, SST W/Orange Handle (7.125" Dia.) (Includes items 3 thru 8)
2	02774.0011	1	Funnel W/Decals, Pouch Pack - Blk (Small) — Includes item 10
	04274.0012	1	Funnel W/Decals, Pouch Pack - Blk (Large)
3	33088.0000	1	Filter Basket w/Splash Guard
4	28553.0000	1	Funnel, SST (Includes items 7 & 8)
5	20244.1000	1	Handle, Black — Includes Screw
	20244.1001	1	Handle, Orange
	01331.0002	1	Screw, Round Head 10-32 x 1.50"
6	01031.0000	1	Funnel Tip Kit
7	03408.0002	1	Decal, Warning-Remove Funnel
8	03409.0002	1	Decal, Warning-Hot Liquid
9	32964.0000	1	Splash Guard
10	28694.0000	1	Decal, Warning-Hot Liquid/Remove Funnel
11	04238.0000	1	Pitcher, 64 oz - Plastic

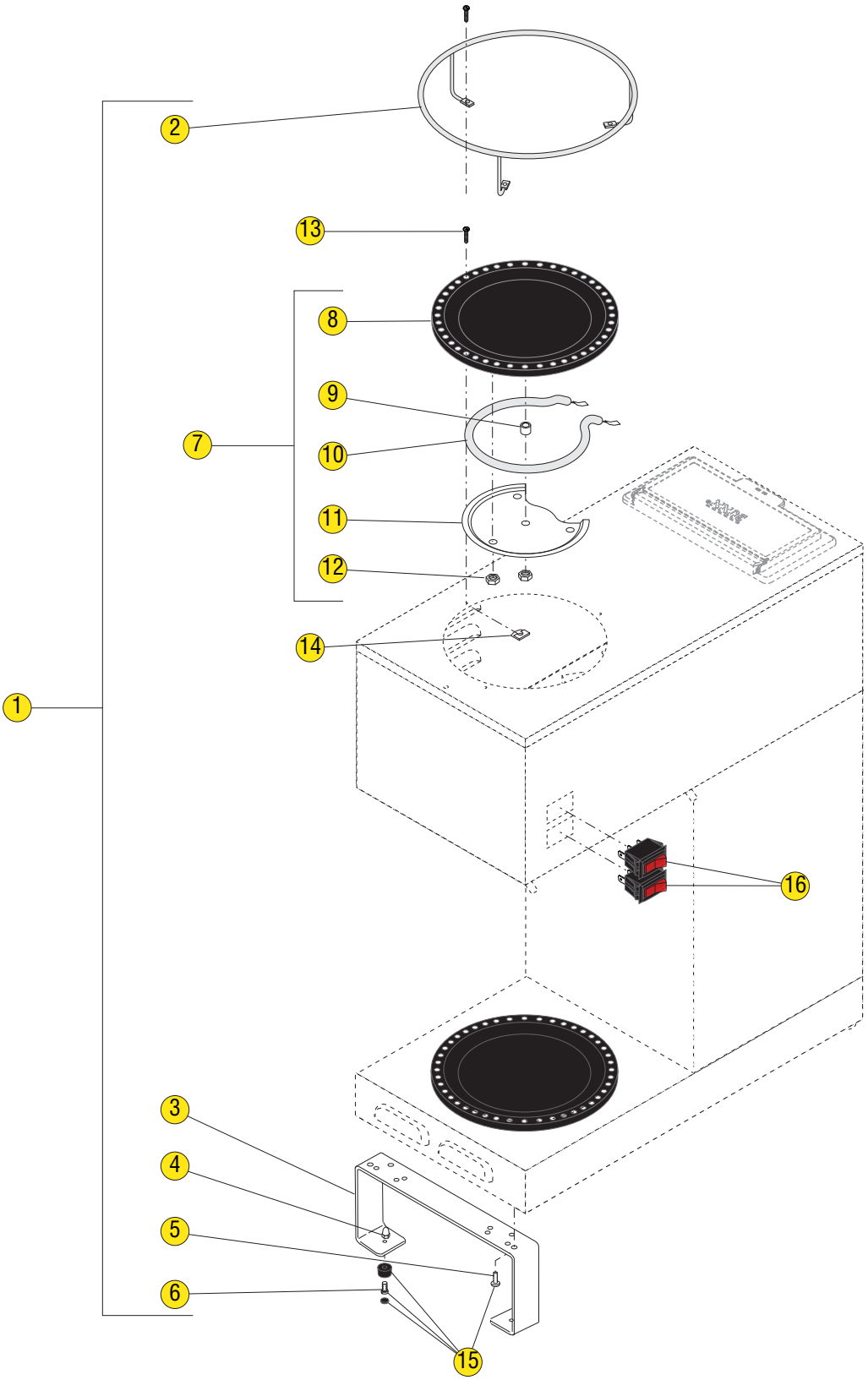
2
13
8
9
7
10
11
12
14
1
16
3
4
5
6
15

WARMERS AND GALLEY KIT

ITEM	PART NO.	QTY.	DESCRIPTION
1	24783.0000	1	Galley Kit (Includes # 2 - 6)
2	24730.0000	2	Galley Rail, SST
	01303.0000	3	Screw, Pan Head (SST) 4-40 x .50”
3	02776.0000	2	Leg, Extension - 3.50HT
4	02324.0000	4	Nut, Acorn (SST) 8-32
5	02332.0002	4	Screw, Hex-Crimptite 6-32 x .38”
6	01390.0000	4	Screw, Round Head - Phillip (SST) 8-32 x .62”
7	03652.0000	2	Warmer Assembly, Blk 100W 120V (Includes # 8 - 12)
8	03656.0000	2	Warmer Dish, Blk
9	13042.0001	2	Spacer, .174” I.D. .188”
10	01227.0000	2	Warmer Element, 100W 120V
11	05212.0000	2	Plate, Warmer Retainer
12	00970.0000	4	Nut, Keps #8-32
13	01303.0000	6	Screw, Pan Head #4-40 x .50”
14	00916.0000	6	Fastener, J-Type (SST) 4-40
15	04198.0000	-	Kit, Rubber Feet (Set of 4) *Optional*
	01390.0000	4	Screw, Round Head - Phillip (SST) 8-32 x .62”
	02332.0002	4	Screw, Hex-Crimptite 6-32 x .38”
16	33213.0000	2	Warmer Switch