Cold Brew and Nitro Coffee Dispenser

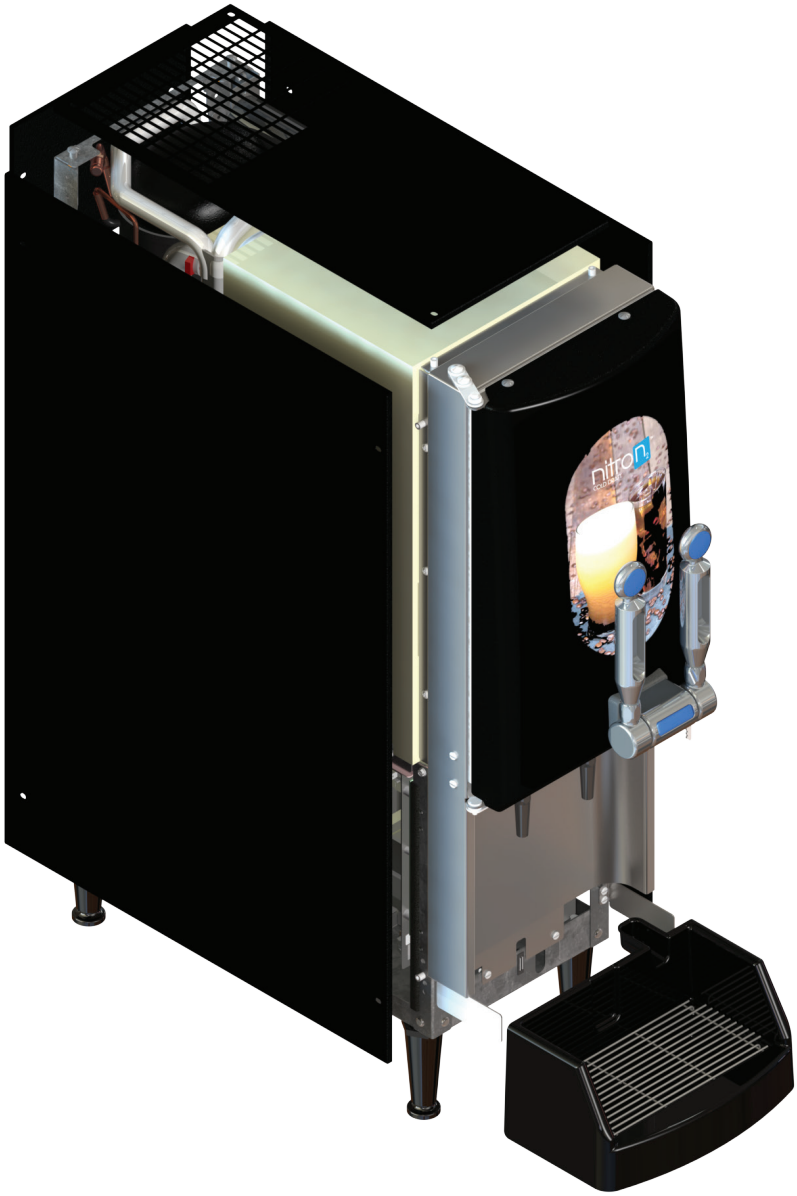

ILLUSTRATED PARTS CATALOG

Designs, materials, weights, specifications, and dimensions for equipment or replacement parts are subject to change without notice.

Bunn-O-Matic Corporation
Post Office Box 3227, Springfield, Illinois 62708-3227
Phone (217) 529-6601 | Fax (217) 529-6644

54319.0000 Z 03/07/25 © 2017 - 2025 Bunn-O-Matic Corporation **www.bunn.com**

BUNN-O-MATIC COMMERCIAL PRODUCT WARRANTY

Warranty statements and information can be found on our website. Please visit https://commercial.bunn.com/support/warranty-lookup for further details.

TABLE OF CONTENTS

Main Frame & Covers 4
Upper Cabinet & Panels 6
Refrigeration Components 8
Compressor Components (CUBIGEL Model: GD40ME) 10
Compressor Components (CUBIGEL Model: B3865L) 12
Fan Assembly 14
Water Tank Assy 16
Circulation Pump & Lines (Early Style) 18
Circulation Pump & Lines (Later Style) 20
Product Coil & Lines 22
Nitrogen Inlet Lines 26
Dispense Platform Assy (Standard Dispense) 30
Dispense Platform Assy (Dual Nitrogen Dispense) 32
Dispense Platform Assy (Dual Nitrogen Dispense/Scholle) 34
Dispense Platform Assy (Standard Dispense with Scholle / Astra Connectors) 36
Still Water Dispense Valve Assy 38
Nitrogen Dispense Valve Assy 40
Water Manifold 42
Water Manifold (Dual Nitrogen Dispense) 44
Door Assy 46
Electrical Components 52
Refillable Container Assy 54
Touchless Sensor Technology Kit 56

To search this document electronically, press “control” + “F” (on P.C.) or “command” + “F” on Mac, then type in description or part number, press “enter”.

MAIN FRAME & COVERS

NITRON$_2$

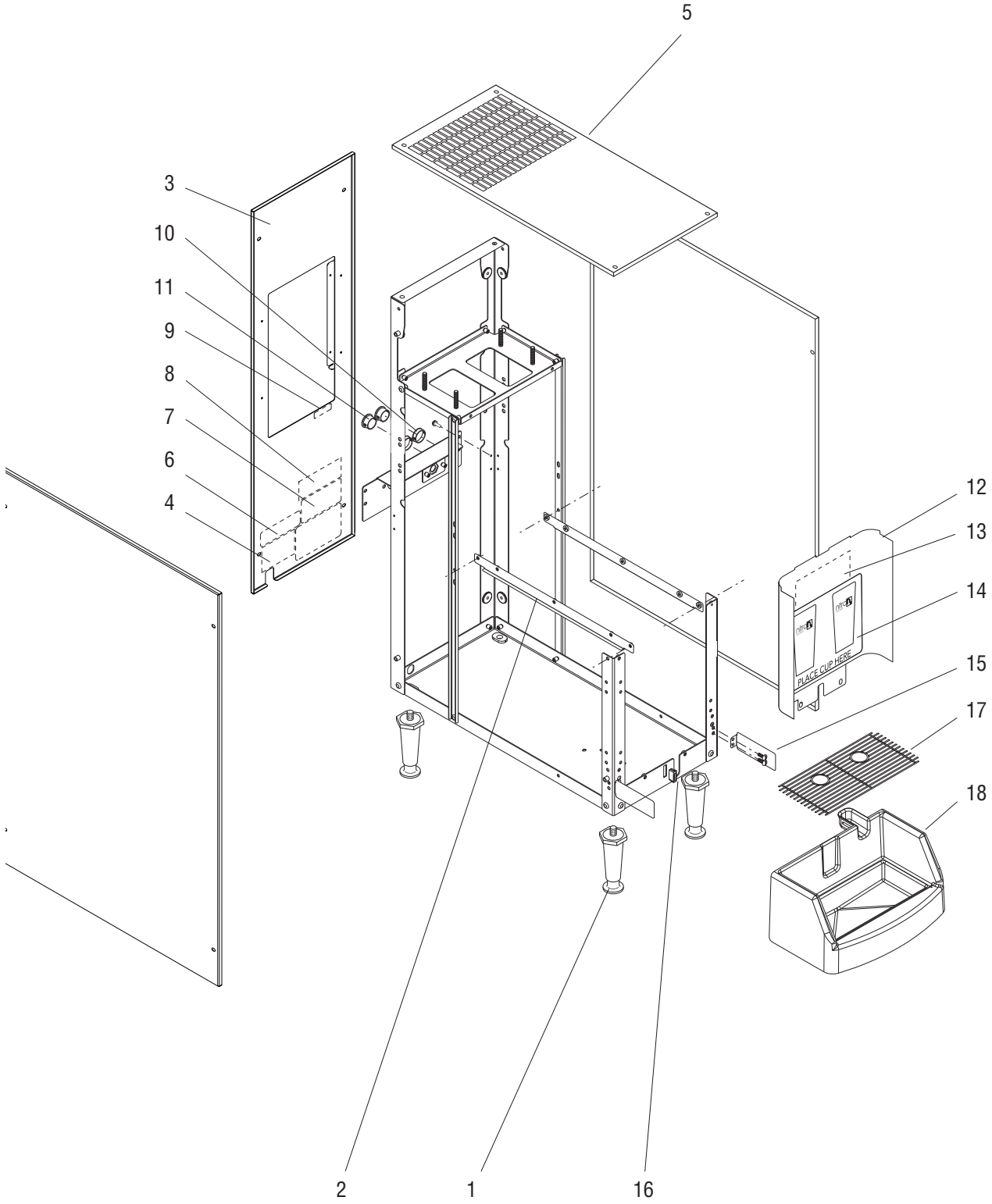

P4407.35

MAIN FRAME & COVERS

ITEM	PART NO.	QTY.	DESCRIPTION
1	26528.0000	4	Leg
	03996.0000	4	Pad, Non-skid
2	38654.0000	2	Bracket, Side
3	53234.1001	1	Panel with Decals (Includes items 4, 5, 6, 7, 8, 9)
4	00986.0002	1	Decal, Warning - Electrical
5	53916.0001	1	Panel, Top
	02331.0001	4	Screw, Truss Head, Blk #10-32 x .38"
	01532.0002	1	Lockwasher, Int.-tooth #10
6	33461.0001	1	Decal, Refrigerant Charge
7	27442.0000	1	Decal, Warning - Moving Parts
8	00656.0001	1	Decal, Comply To Plumbing Code
9	41509.0006	1	Decal, Set N2 Pressure
10	00668.0000	2	Plug
11	27354.0000	2	Bushing
12	38661.0000	1	Panel, Splash (Also order items 13)
	02308.0000	2	Screw, Pan Head #8-32 x .38"
13	54267.0000	1	Schematic, Electrical
14	55532.0000	1	Decal, Cup Locater
15	38617.0001	2	Bracket
	02308.0000	4	Screw, Pan Head #8-32 x .38"
16	21436.0000	1	Catch, Magnetic
17	26801.0005	1	Grate, Drip Tray
18	44015.1001	1	Drip Tray Assy, Extended

UPPER CABINET & PANELS

NITRON$_2$

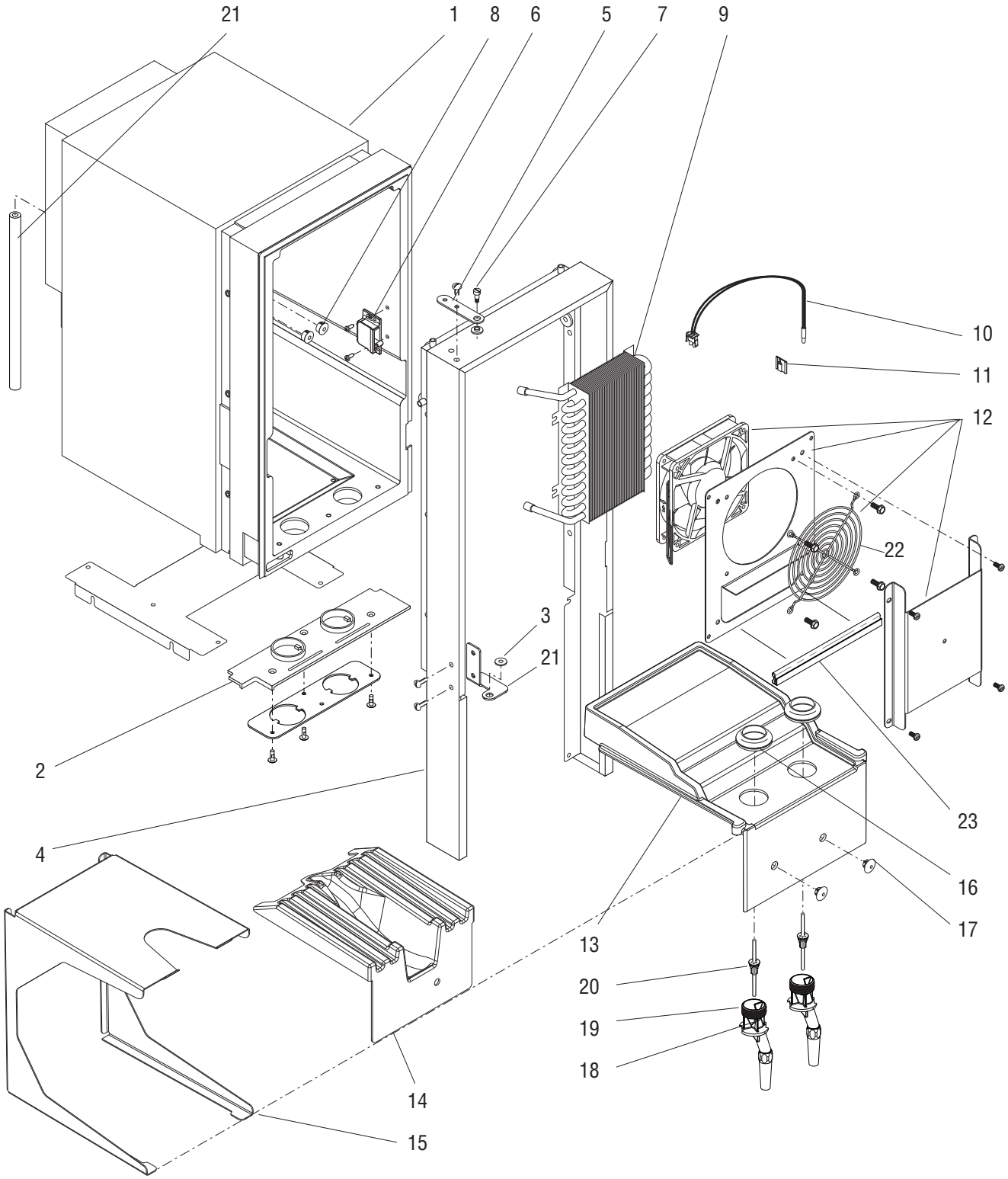

P4408.50

UPPER CABINET & PANELS

ITEM	PART NO.	QTY.	DESCRIPTION
1	38857.1000	1	Cabinet Assy
	24544.0000	6	Screw, Pan Head #8-18
2	34784.0001	1	Plate, Bottom Closure
	01317.0001	3	Screw, Flat Head #8-32 x .38"
3	34362.0006	2	Bushing, Hinge
4	44118.0000	1	Wrap
	24544.0000	6	Screw, Pan Head #8-1
	02308.0000	4	Screw, Pan Head #8-32 x .38"
5	34785.0001	1	Bracket, Hinge
	02331.0001	2	Screw, Truss Head, Blk #10-32 x .38"
	43951.0000	2	Washer
6	34666.0001	1	Catch, Door Latch
	01388.0000	2	Screw, Truss Head #6 x .75"
7	34741.0001	1	Screw, Shoulder
8	00669.0002	2	Plug
9	34419.0001	1	Coil, Water
	24544.0000	4	Screw, Pan Head #8-18
10	43694.0000	1	Sensor Assy, Temperature
11	33669.0000	1	Clip, Adhesive Back
12	53480.1001	1	Fan Assy (Includes item 22)
	38616.0000	4	Screw, Hex Head #10-24
13	34422.0003	1	Shelf, Product
14	34422.0006	1	Shelf, Product Lower CBDSPCT SCHOLLE / ASTRA
15	34422.0015	1	Shelf, Product Upper CBDSPCT SCHOLLE
	01317.0003		Screw, To Secure shelf to cabinet fan guard
16	32461.0000	2	Gasket, Drip
17	27394.0000	2	Plug
18	53205.1000	1	Nozzle Assy (Includes item 19 & 20, NITRO)
	53205.1001	1	Nozzle Assy (Includes item 19, STILL)
19	32848.0000	4	O-ring
20	53026.0003	2	Insert, Nozzle Nitro Pull
21		1	Tube, Silicone .25"ID x 10.0"
22	34010.0001	1	Guard, Fan
23	39086.1000	1	Kit, Fan Seal Cover
The following items are not illustrated			
	41385.0000	1	Bracket
	02308.0000	2	Screw, Pan Head #8-32 x .38"
	11707.1000	-	Tube, Silicone .25"ID x 12.0" (Use as required)

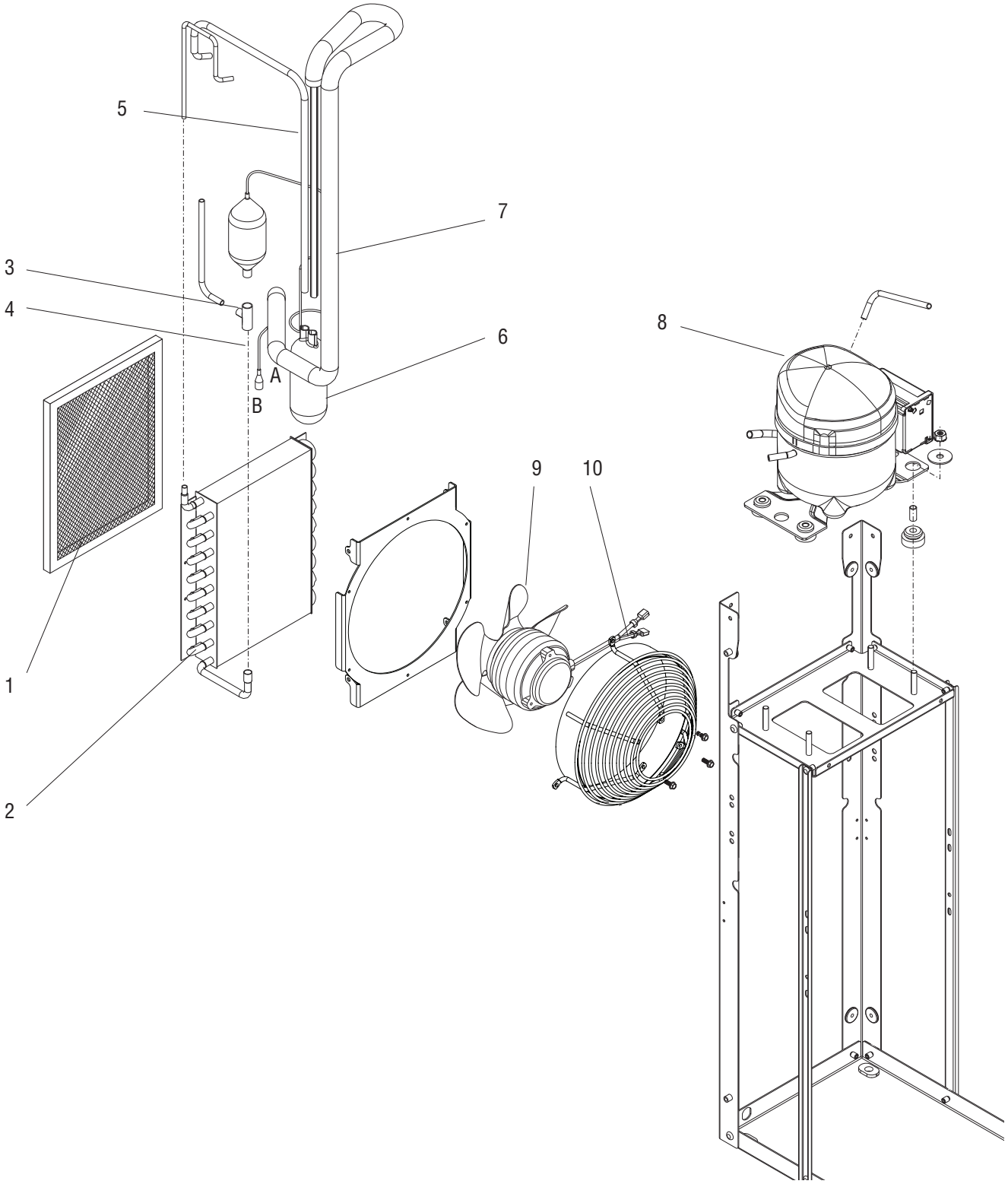

NOTE: Letters appearing within this illustration correspond to matching connections in other illustrations.

P4409.1

REFRIGERATION COMPONENTS

ITEM	PART NO.	QTY.	DESCRIPTION
1	35164.1000	1	Air Filter Assy (Includes item 12)
	35164.1001	1	Filter, Air JDF-2S/4S Side Pull Ring & Velcro (Includes item 12)
2	29951.0004	1	Condenser
	02335.0001	4	Screw, Crimptite #8 x .38"
3	00396.0002	1	Tee (Requires brazing to install)
4	35178.0000	1	Adapter (Requires brazing to install)
5			
6	32776.0000	1	Accumulator
7	35175.1006	1	Tube Assy (Requires brazing to install)
8	- - - - - - - -	1	Compressor (See COMPRESSOR COMPONENTS)
	23700.0000	4	Nut .25"-20
9	- - - - - - - -	1	Fan Assy (See FAN ASSEMBLY)
	27243.0000	3	Screw #8-36 x .437"
10	52454.0003	1	Mount, Wire Guard
	02335.0001	3	Screw, Crimptite #8 x .38"

The following items are not illustrated

11	M2336.1000	-	Insulation, Tube 25/50 - 0.25"ID x .19" wall x 6.0 Ft (Use as required)
12	- - - - - - - -	-	Velcro Tape, Nyl Hook w/Adh.75W, 14.0"Lg
	- - - - - - - -	-	Velcro Tape, Nyl Loop w/Adh.75W, 14.0"Lg

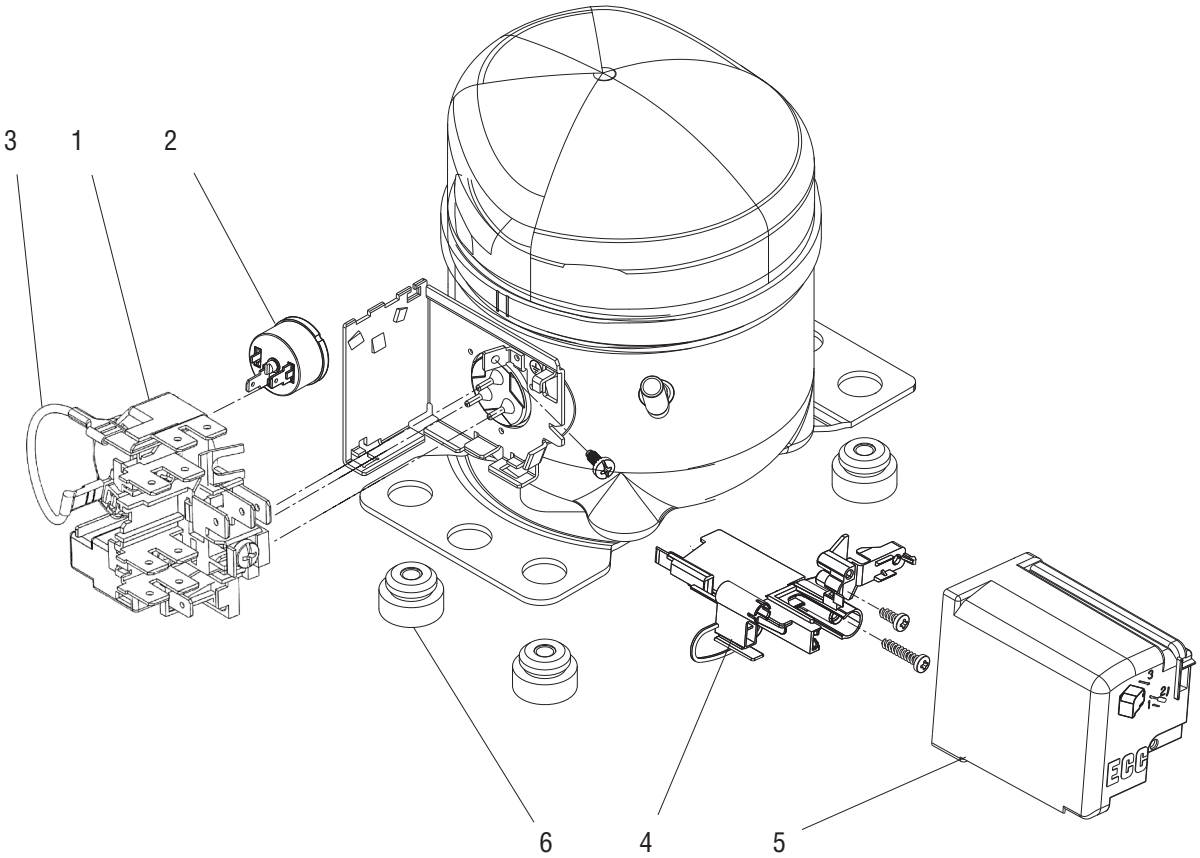

P4040.30

COMPRESSOR COMPONENTS (CUBIGEL Model: GD40ME)

ITEM	PART NO.	QTY.	DESCRIPTION
1	39912.0002	1	Relay, Compressor 120V
2	39908.0002	1	Overload Protector 120V
3	41398.0000	1	Cable
4			
5	39907.0000	1	Cover
6	41396.0000	1	Mounting Kit (Includes 4 Grommets and Sleeves)

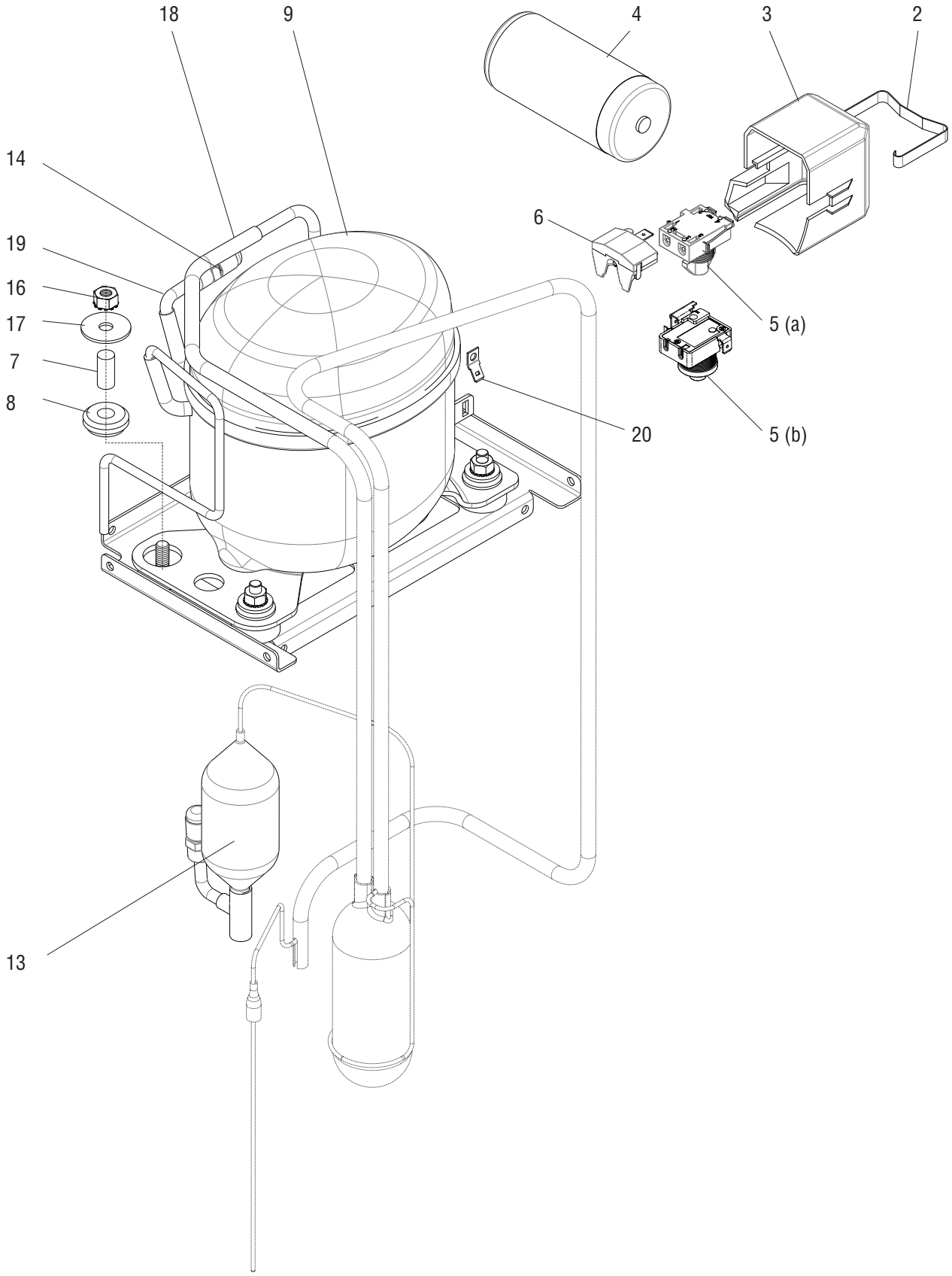
18
9
4
3
2
14
6
19
16
17
5 (a)
7
8
20
5 (b)
13

COMPRESSOR COMPONENTS (CUBIGEL Model: B38G5L)

ITEM	PART NO.	QTY.	DESCRIPTION
2	53848.0000	1	Clip, Electrical
3	53847.0000	1	Cover, Electrical
4	53849.0000	1	Capacitor, Start Comp 61 MFD 330V B38G
5	53852.0000 (a)	1	Relay, Compressor 120V
	53852.0001 (b)	1	Relay, Compressor 230V
6	53851.0000	1	Overload Protector 120V
	53851.0001	1	Overload Protector 230V
7	53853.0000	1	Sleeve Kit (Includes 4)
8			
9	53850.1000	1	Kit, 120V Parts included in Compressor Replacement (Includes 10 - 24)
	53850.1001	1	Kit, 230V Compressor Replacement (Includes 10 - 24)
			This kit replaces either an LG NS36 compressor or a Cubigel GD40 compressor with a Cubigel B38G compressor.
10	----------	1	Compressor Assembly, 120V
		1	Compressor Assembly, 230V (50/60HZ)
11	----------	1	Compressor Shelf
12	----------	1	Discharge Tube
13	----------	1	Filter Dryer
14	----------	1	Schrader Valve
	27551.0000	1	Valve, Access .25 OD
	27551.0001	1	Valve, Access .25 OD X 90 Degree
	27641.0000	1	Cap, O-Ring Quick Seal .25 SAE
	27642.0000	1	Valve Core, .25 SAE
15	01317.0000	6	Screw
16	23700.0000	4	Nut
17	34529.0000	4	Washer
18			
19	38937.0000	2	Process Tube
20	36528.0000	1	Ground Terminal

The following items are not illustrated

21	02308.0000	1	Screw
22	----------	3	Wire Ties
23	----------	1	Label - Thermal
24	----------	4	Decal - This Side Up
25	53931.0000	1	Wiring Harness, Main - Voltage - CBDSPCT

FAN ASSEMBLY

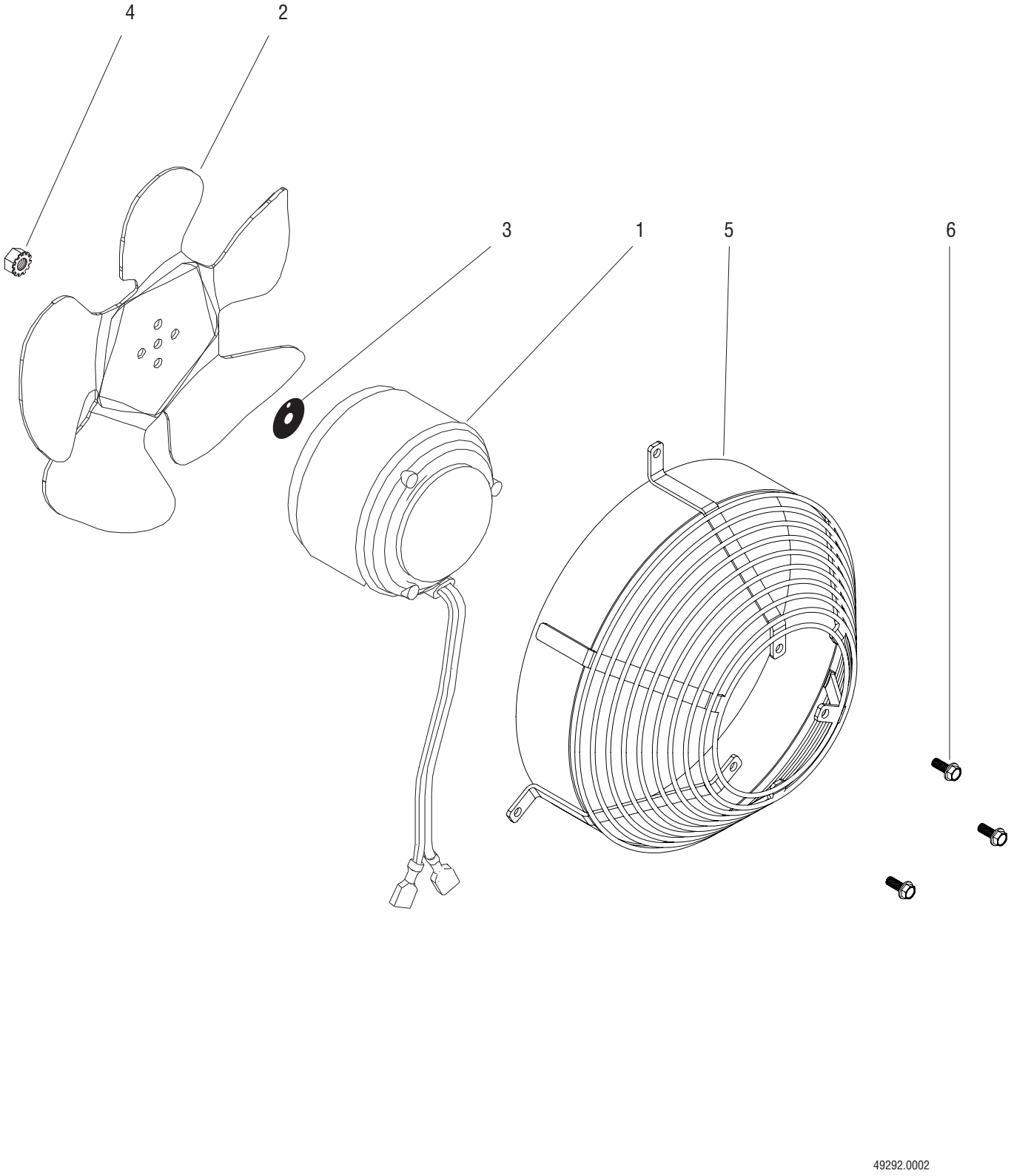

FAN ASSEMBLY

ITEM	PART NO.	QTY.	DESCRIPTION
	49292.1002	-	Kit, Condenser 120V Wire Guard Fan Assy (Includes item 1 thru 6)
	49292.1003	-	Kit, Condenser 230V Wire Guard Fan Assy (Includes item 1 thru 6)
1	33603.0003	1	Motor Assy 120V
	33603.0004	1	Motor Assy 230V
2	33602.0000	1	Blade, Fan
3	27258.0000	1	Silencer
4	23700.0000	1	Nut .25"-20
5	52454.0004	1	Mount, Wire Guard 7.00 In Fan Blade
6	27243.0000	3	Screw,8-36x.437 Thread Forming

WATER TANK ASSY

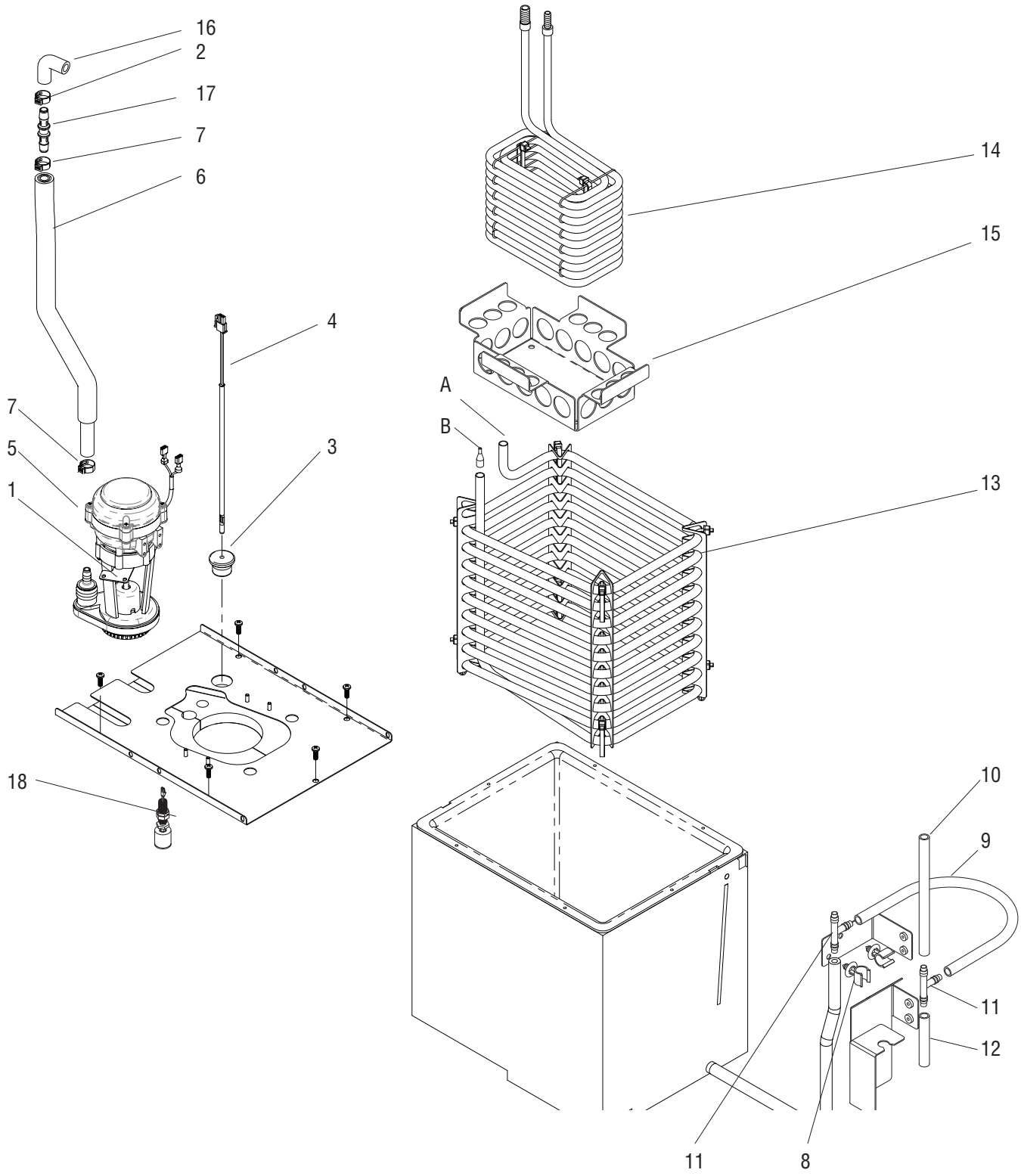

P4410.50 B

WATER TANK ASSY

ITEM	PART NO.	QTY.	DESCRIPTION
1	00973.0001	4	Nut, Keps #6-32
2	12422.0001	1	Clamp, Hose-Snap Type.59/.66ID
3	33801.0003	1	Grommet
4	28891.1000	1	Probe, Temperature
5	53761.1000	1	Pump Assy 120/230VAC
6		1	Tube, Silicone .313x.562x18.0LG (Order item 21)
		-	Insulation,Tube 1/2IDX3/16W (Order item 19)
7	21275.0013	3	Clamp, SST-.539/.638 DIA#16.2 Light Blue
8	27410.0000	2	Clip, Tube Mounting
9		1	Tube, Silicone .25" ID x 7.0" (Order item 22)
10		1	Tube, Silicone .25" ID x 6.25" (Order item 22)
11	38605.0000	2	Tee .25" Barb
12		1	Tube, Silicone .25" ID x 3.0" (Order item 22)
13	47581.0000	1	Evaporator Coil Assy (Includes spacers & ties)
14	51522.0001	1	Product Coil Assy (Includes wire form & ties)
15	50548.0002	1	Baffle
16	45928.0000	1	Elbow
17	51902.0000	1	Connector .38" Barb
18	55112.0001	1	Switch Assembly, .58 Diameter Float w/Bhd & Nut
	49830.0000	1	Lock Washer
	29264.0000	1	Nut, Hex SSt. .50-20 UNF

The following items are not illustrated

19	M2337.1000	-	Insulation, Tube 25/50 .50" ID x 72.0" (Cut to required length)
20	M2336.1000	-	Insulation, Tube 25/50 .38" ID x 72.0" (Cut to required length)
21	28526.1000	-	Tube, Silicone .313 ID x 12.00 LG (Cut to required length)
	28526.1001	-	Tube, Silicone .313 ID x 36.00 LG (Cut to required length)
	28526.1002	-	Tube, Silicone .313 ID x 60.00 LG(Cut to required length)
22	11707.1000	-	Hose, Silicone .25" ID x .625" OD x 12.0" (Cut to required length)
	11707.1001	-	Hose, Silicone .25" ID x .625" OD x 36.0" (Cut to required length)
	11707.1002	-	Hose, Silicone .25" ID x .625" OD x 120.0" (Cut to required length)

CIRCULATION PUMP & LINES - EARLY STYLE

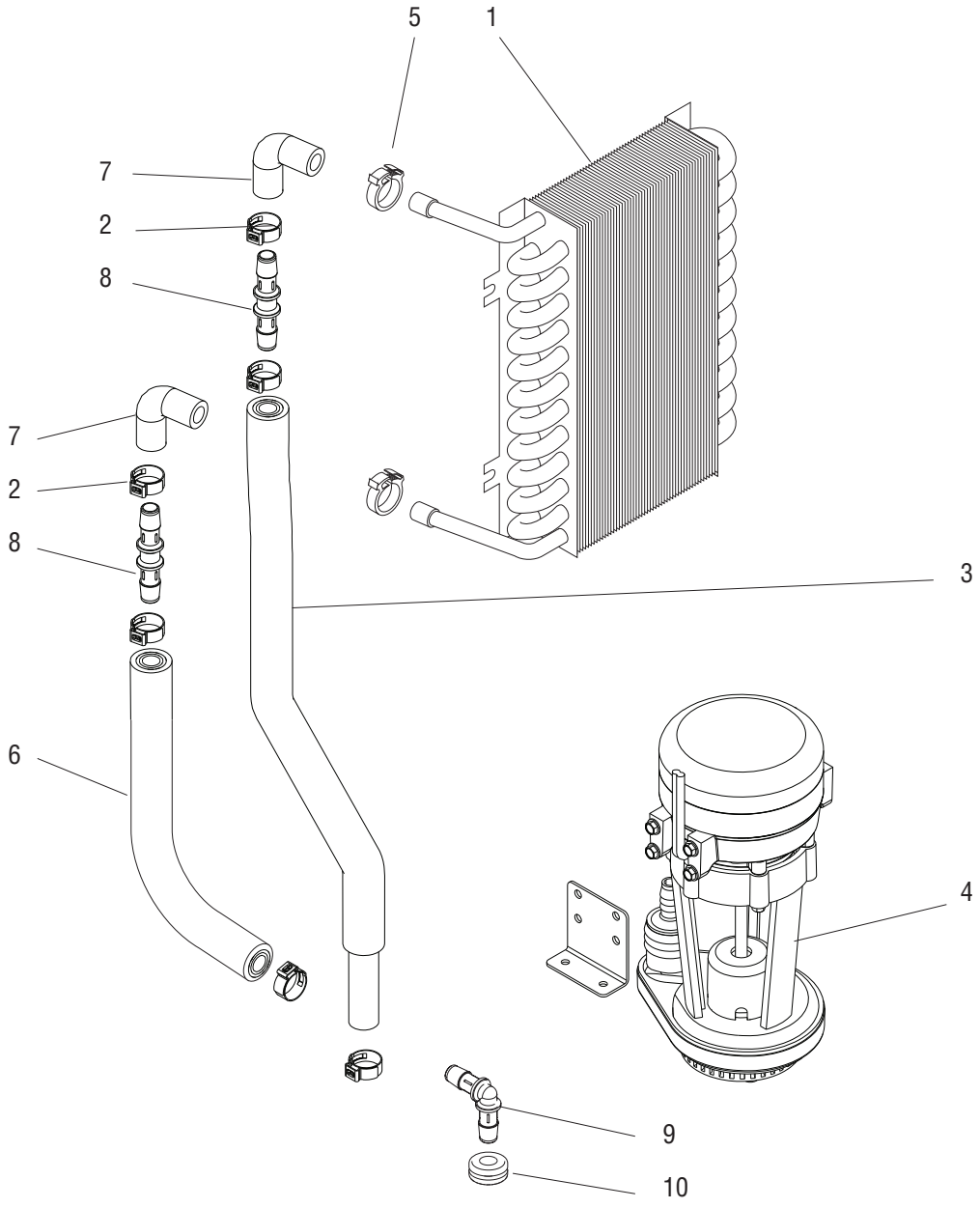

P4411.00

CIRCULATION PUMP & LINES

ITEM	PART NO.	QTY.	DESCRIPTION
1	- - - - - - - -	1	Coil, Upper Cabinet (See UPPER CABINET & PANELS)
2	21275.0004 or 21275.0013	6	Clamp .538 - .638"
3		1	Tube, Silicone .38" ID x 18.0" (Order item 12)
4	- - - - - - - -	1	Pump, Circulation (See WATER TANK ASSEMBLY)
5	53766.0001 12422.0001	2 2	Clamp, Hose Worm Drive 9mm (Early Models) Clamp, Hose-Snap #10 (Late Models)
6		1	Tube, Silicone .38" ID x 10.5" (Order item 12)
7	45928.0000	2	Elbow
8	51902.0000	2	Connector .38" Barb
9	40348.0000	1	Elbow, 38" Barb
10	54234.0000	1	Grommet

The following items are not illustrated

11	M2337.1000	-	Insulation, Tube 25/50 .50" ID x 72.0" (Cut to required length)
12	54496.1000	-	Hose, Flex .38" ID x .625" OD x 12.0" (Cut to required length)
	54496.1001	-	Hose, Flex .38" ID x .625" OD x 36.0" (Cut to required length)
	54496.1002	-	Hose, Flex .38" ID x .625" OD x 120.0" (Cut to required length)

CIRCULATION PUMP & LINES - LATER STYLE

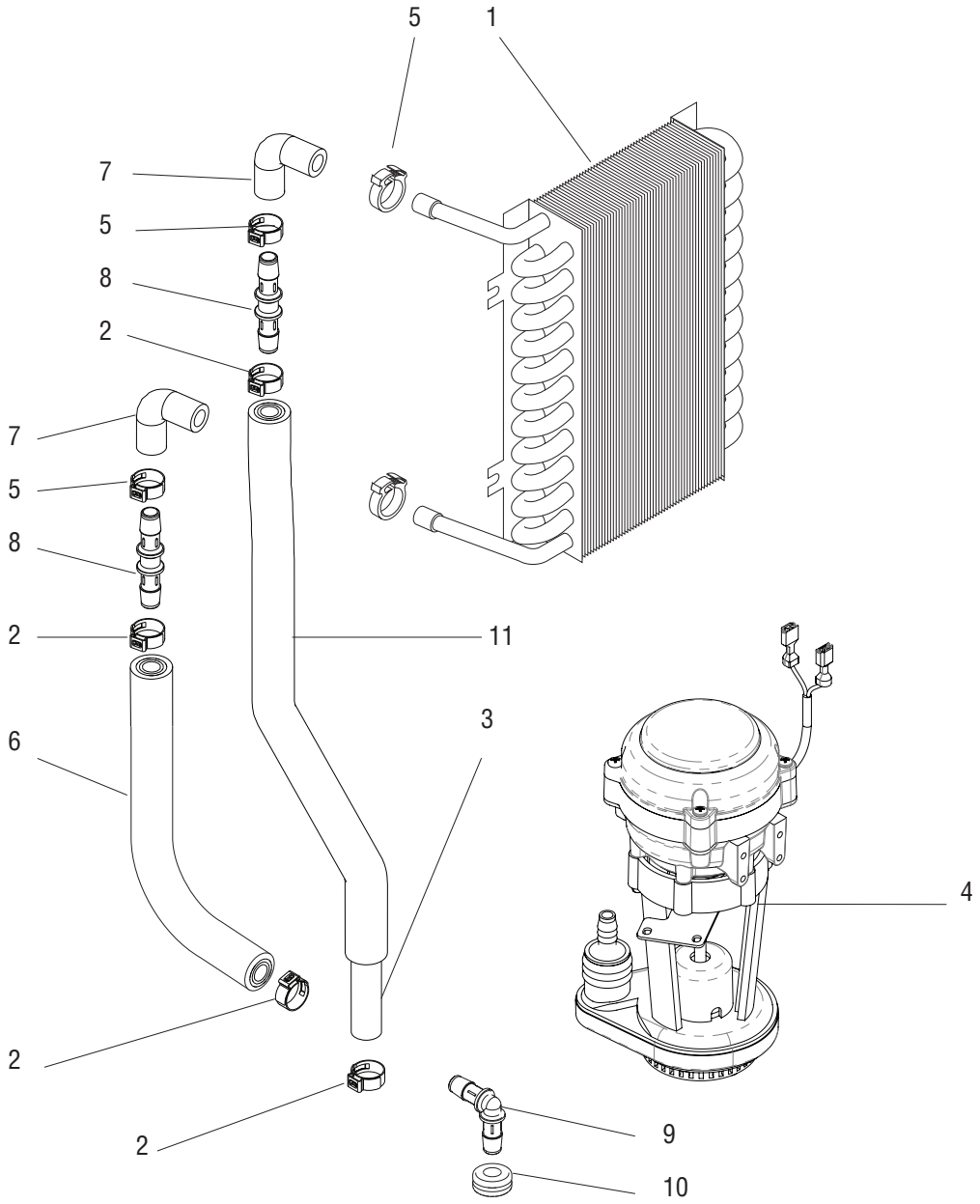

P4411.00

CIRCULATION PUMP & LINES

ITEM	PART NO.	QTY.	DESCRIPTION
1	- - - - - - - -	1	Coil, Upper Cabinet (See UPPER CABINET & PANELS)
2	21275.0013	4	Clamp, SST-.539/.638 DIA#16.2 Light Blue
3		1	Tube, Silicone .313x.562x18.0LG (Order item 12)
		-	Insulation,Tube 1/2IDX3/16W (Order item 11)
4	- - - - - - - -	1	Pump, Circulation (See WATER TANK ASSEMBLY)
5	53766.0001	2	Clamp, Hose Worm Drive 9mm (Early Models)
	12422.0001	4	Clamp, Hose-Snap #10 (Late Models)
6		1	Tube, Silicone .38" ID x 10.5" (Order item 12)
		-	Insulation,Tube 1/2IDX3/16W (Order item 11)
7	45928.0000	2	Elbow
8	51902.0000	2	Connector .38" Barb
9	40348.0000	1	Elbow, 38" Barb
10	54234.0000	1	Grommet
11	M2337.1000	-	Insulation, Tube 25/50 .50" ID x 72.0" (Cut to required length)

The following items are not illustrated

12	28526.1000	-	Tube, Silicone .313 ID x 12.00 LG (Cut to required length)
	28526.1001	-	Tube, Silicone .313 ID x 36.00 LG (Cut to required length)
	28526.1002	-	Tube, Silicone .313 ID x 60.00 LG(Cut to required length)

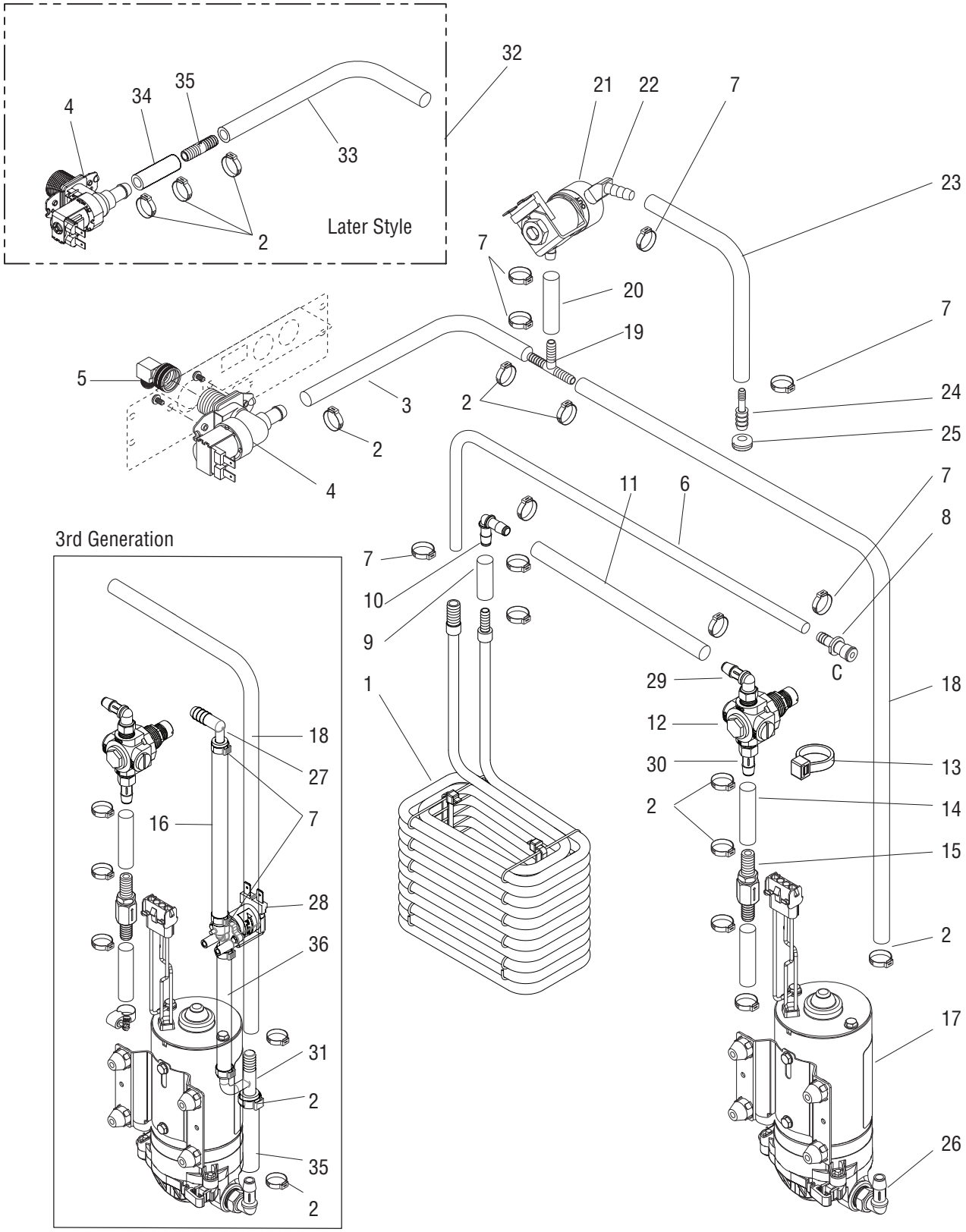

NOTE: Letters appearing within this illustration correspond to matching connections in other illustrations.

P4412.75

3rd Generation: Bath fill solenoid relocated above pump and connected with a "Y" barb fitting on the inlet side of the pump.

PRODUCT COIL & LINES

ITEM	PART NO.	QTY.	DESCRIPTION
1	- - - - - - - -	1	Product Coil (See WATER TANK ASSEMBLY)
2	21275.0013	8	Clamp, SST-.539/.638 DIA#16.2 Light Blue
3		1	Hose, Flex .38" ID x 8.75" (Order item 36)
4	36233.0005	1	Valve, Water Inlet 120V (See item 32)
	36233.0006	1	Valve, Water Inlet 230V
	32283.0000	2	Screw, Pan Head M4 x 6mm
5	37297.1001	1	Fitting, Elbow .38" Fl x .75" Fine Hose (Includes Gasket)
	41640.0000	1	Gasket
6		1	Hose, Braided .25" ID x 16.50" (Order item 37)
7	21275.0001	7	Clamp .425" - .523"
8	34460.0000	1	Coupling, Quick Disconnect, Male
9		1	Hose, Flex .38" ID x 2.0" (Order item 36)
10	55744.0000	1	Fitting, Elbow .38" Barb
11	45848.0008	1	Hose, Flex .38" ID x 10.5" (Order item 36)
12	53762.0000	1	Regulator
13	36329.0000	1	Cable Tie
14		2	Hose, Flex .38" ID x 3.0" (Order item 36)
15	40071.0015	1	Check Valve, SST.38 Barb w/Vit
16		1	Tube, Silicone -.25ID (Order item 40)
17	- - - - - - - -	1	Pump (See ELECTRICAL COMPONENTS)
18		1	Hose, Flex .38" ID x 20.0" (Order item 36)
19	32749.0002	1	Fitting, Tee .38" x .25" barb
20		1	Hose, Braided .25" ID x 2.50" (Order item 37)
21	32757.0000	1	Valve Assy (Kip), Water 24VDC (Early Models)
22	33008.0001	2	Elbow, 45 Deg .25 Barb
23		1	Hose, Braided .25" ID x 6.0" (Order item 37)
24	33068.0001	1	Fitting, .38" x .25" barb
25	54234.0000	1	Grommet
26	48348.0002	2	Fitting, Elbow .38" NPT x .38" Barb
27	32656.0000	1	Fitting, Elbow .25 x .38 Barb
28	56009.0000	1	Valve, 24VDC (DELTROL)
29	20202.1601	1	Elbow, Tin Pld-.375 Barb x .25 Mpt
30	21136.0001	1	Fitting, Barb-Pld .38 Hose x. 25 Mp
31		1	Tee, Y .375 Run x .25 Barb SST
32	49386.1008	-	Kit, Hose Assy, Water Inlet Valve 120VAC (Later Style - Includes Items 2,4 & 32-34)
33		1	Hose, .38 ID x 22.0 LG Braided Wht Line (Order item 36)
34		1	Hose, .38 ID x 2.25 LG Braided Wht Line (Order item 36)
35	55752.0000	1	Fitting Assy, Check Valve 3/8 Barb SST

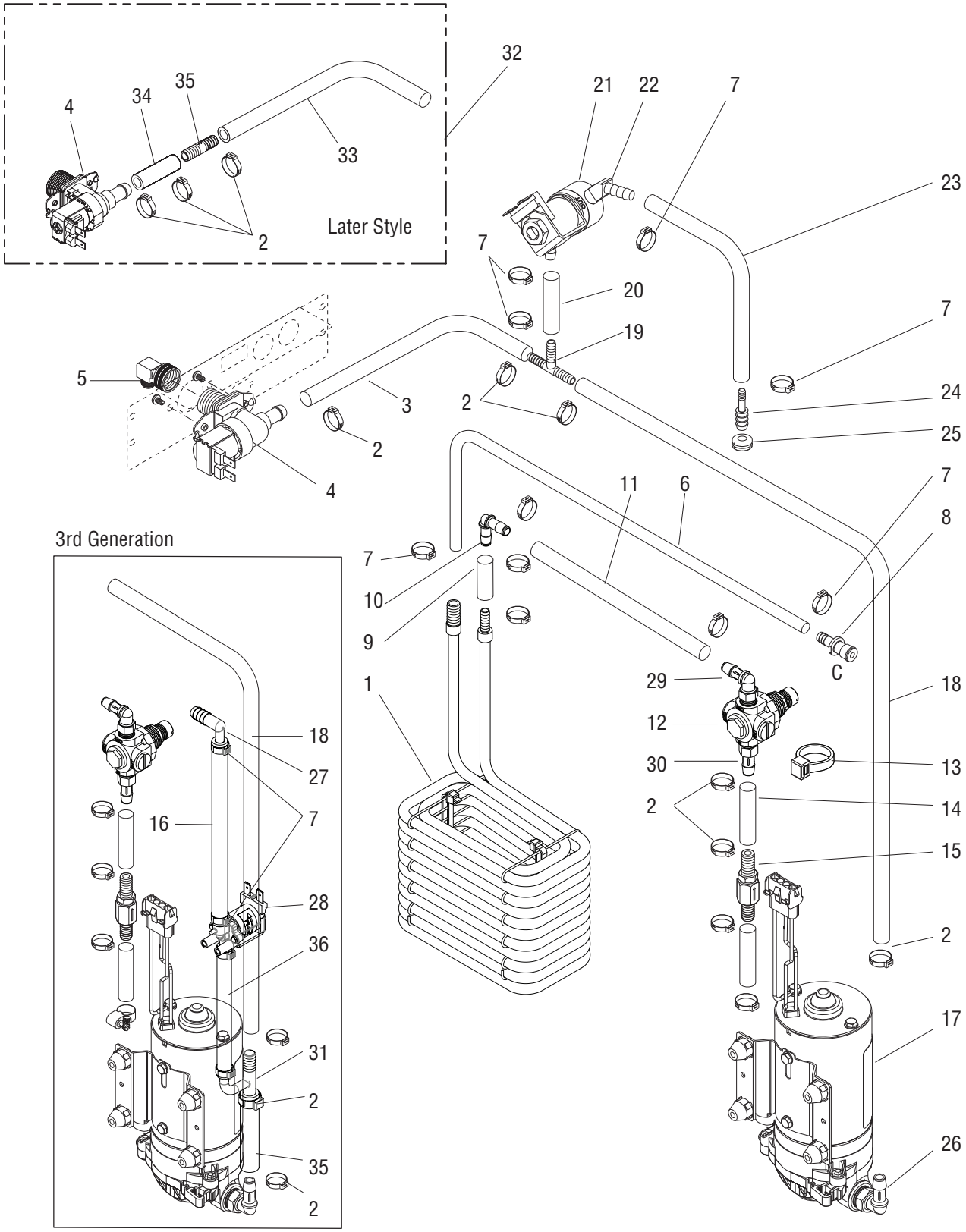

NOTE: Letters appearing within this illustration correspond to matching connections in other illustrations.

P4412.75

3rd Generation: Bath fill solenoid relocated above pump and connected with a "Y" barb fitting on the inlet side of the pump.

PRODUCT COIL & LINES

ITEM	PART NO.	QTY.	DESCRIPTION
The following items are not illustrated			
36	54496.1001	-	Hose, Flex .38" ID x 36.0" (Cut to required length)
37	54497.1001	-	Hose, Braided .25" ID x 36.0" (Cut to required length)
38	M2336.1000	-	Insulation, Tube 25/50 .38" ID x 72.0" (Cut to required length)
39	43644.0000	-	Kit, Valve Rebuild
40	11707.1001	-	Tube, Silicone -.25ID x 36.0" (Cut to required length)

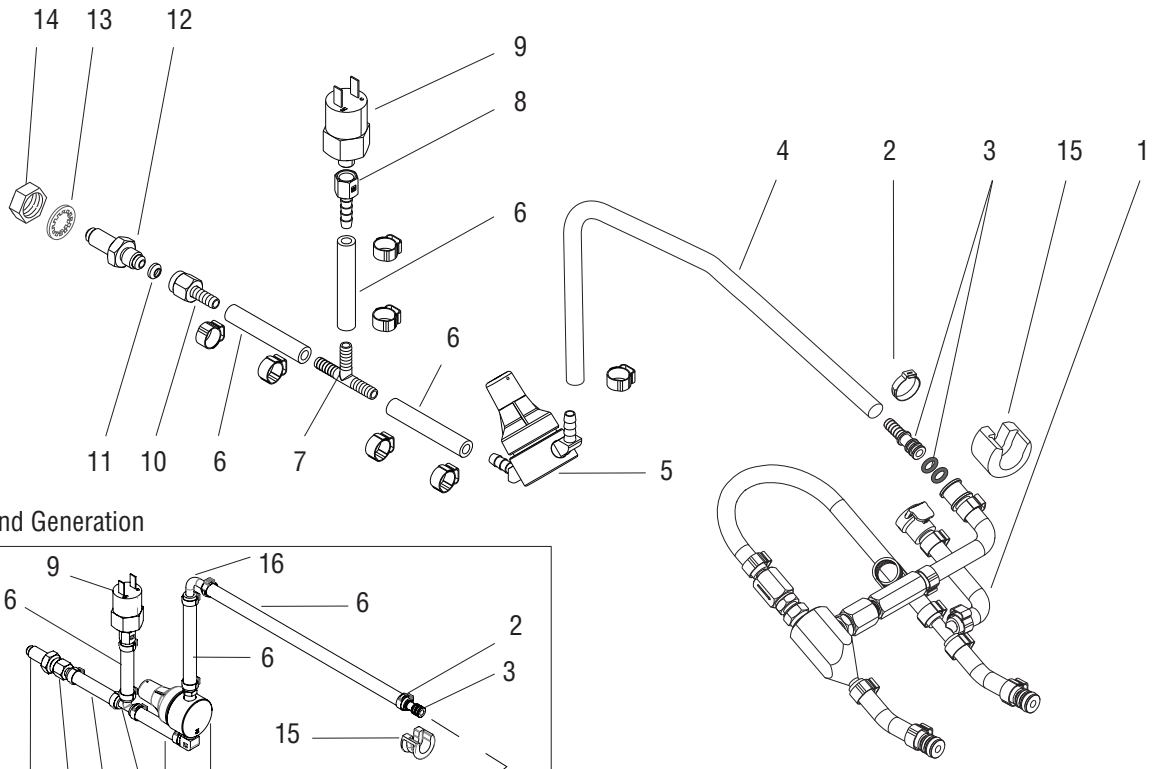

2nd Generation

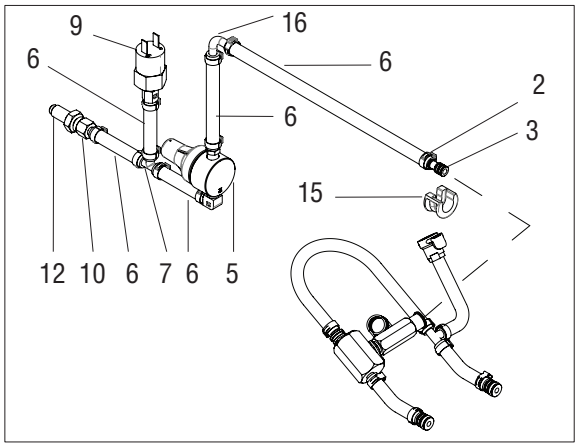

3rd Generation

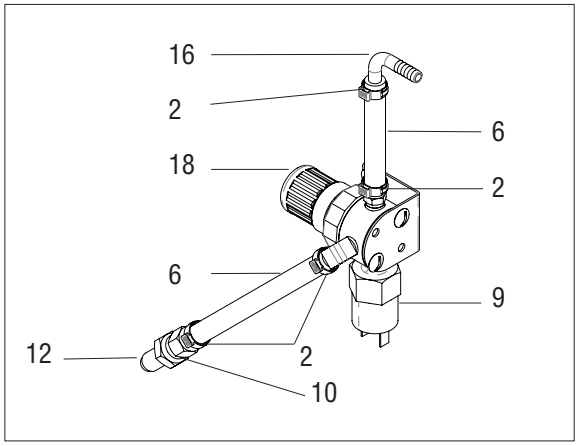

2nd Generation: Revised plumbing going to nitrogen gas regulator and water manifold revision.

3rd Generation: Revised to an adjustable nitrogen gas pressure regulator.

P4413.75

NITROGEN INLET LINES (CONTINUED)

ITEM	PART NO.	QTY.	DESCRIPTION
1	- - - - - - - -	1	Manifold, Water (See WATER MANIFOLD)
2	21275.0001	8	Clamp .425 - .523"
3	44154.0002	1	Fitting
	24733.0000	2	O-ring
	44023.0001	1	Lube, Silicone HAYNES 1 oz. Tube (Not illustrated)
4		1	Hose, Braided .25" ID x 15.75" (Order item 17)
5	47249.0002	1	Regulator Assy, Nitrogen (1st Generation)
	33008.0001	2	Elbow, 45 Deg .25 Barb Pld (1st Generation)
	47249.0002	1	Regulator Assy, Nitrogen (2nd Generation)
	48353.0000	1	Fitting, .250 Barb x .125 Mpt - 303 SST (2nd Generation)
	48280.0002	1	Fitting, Elbow .25 Barb x .125 Npt SST (2nd Generation)
6		3	Hose, Braided .25" ID x 2.50" (Order item 17)
7	32760.0000	1	Fitting, Tee,.25 Barb x.25 Barb x.25 Barb
	32760.0000	1	Fitting, Tee .25" Barb SST (2nd Generation)
8	00478.0001	1	Fitting, .25" x .125"NPT
9	55882.0003	1	Switch, Pressure 98/112 Psig .125 Npt
10	00425.1000	1	Coupling
11	33149.0001	2	Gasket
12	00459.0000	1	Fitting, Bulkhead
13	01532.0000	1	Lockwasher
14	00463.0000	1	Nut
15	54433.0001	1	Fitting, Snap Lock
16	32761.0001	1	Fitting, Elbow .25" Barb SST (2nd Generation)
17	54497.1000	1	Hose, Braided .25" ID x 12.0" (Cut to required length)
	54497.1001	1	Hose, Braided .25" ID x 36.0" (Cut to required length)
	54497.1002	1	Hose, Braided .25" ID x 120.0" (Cut to required length)
18	54533.0000	1	Regulator, 5-100 PSI, Adjust N_2 (3rd Generation)

The following items are not illustrated

19	54533.1000	1	Kit, Air Adjust 2 Input Regulator

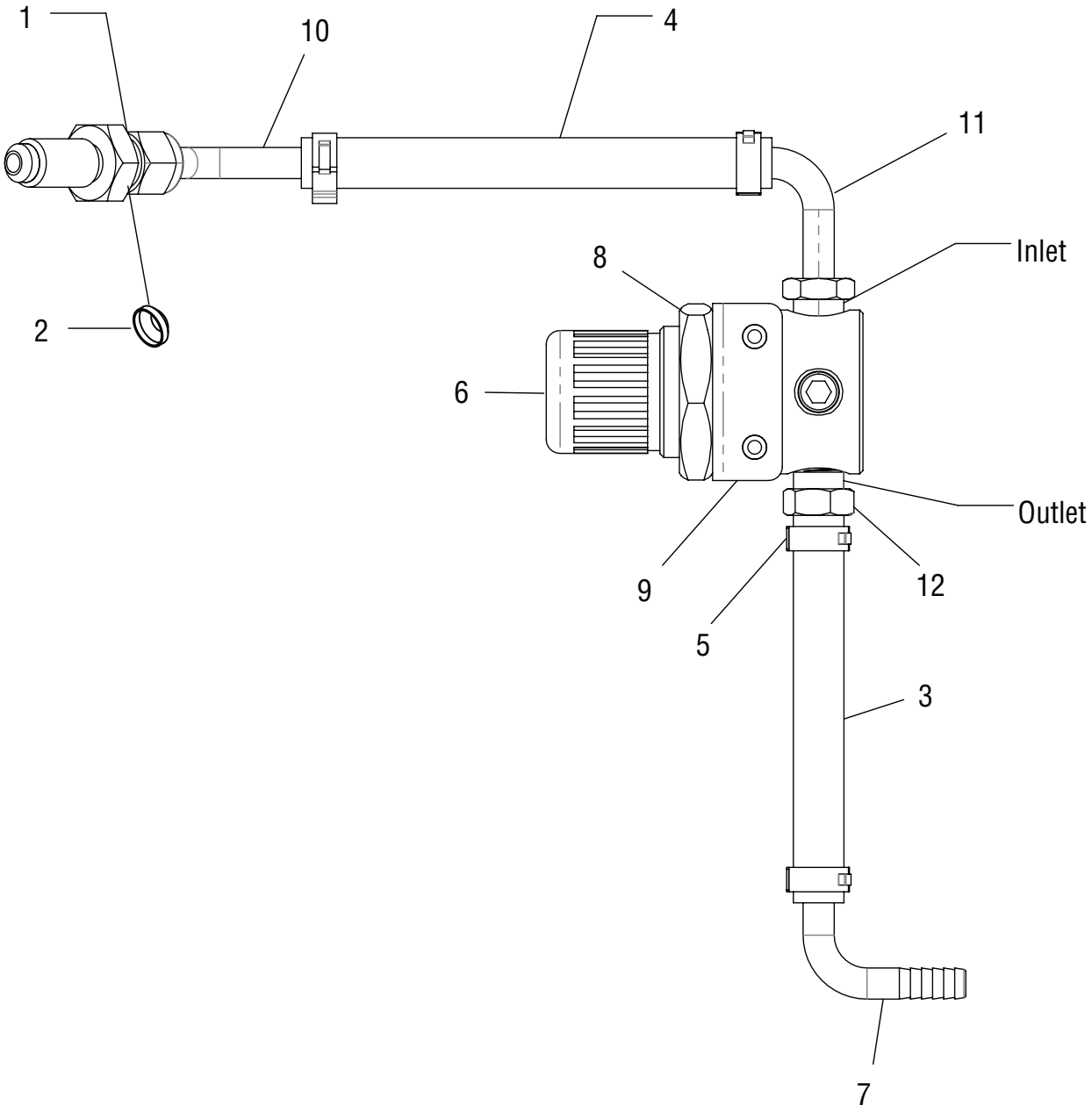

4th Generation: Pressure switch eliminated from the assembly that triggered the door Nitrogen Empty Red LED.
Reason: For the most part, Nitrogen Tank Systems are not being used when the BUNN NGM Gas Module is being used which requires the Nitrogen Empty Red LED Indicator to be disconnected.

NITROGEN INLET LINES - 4th Generation

ITEM	PART NO.	QTY.	DESCRIPTION
1	00459.0000	1	Fitting, Bulkhead-Brs .250 Flr
2	33149.0001	1	Gasket, .25 Fl Wht Nylon
3		1	Hose, .265 Id x 3.5 Lg Braided Red Line (Order item 11)
4		1	Hose, .265 Id x 4.25 Lg Braided Red Line (Order item 11)
5	21275.0001	4	Clamp, SST-.425/.523 Dia 13.3
6	53762.0000	1	Regulator, Water 0-125 psig Brass
7	32761.0001	1	Fitting, 90° .25 Barb SST
8	54572.0001	1	Nut, Plastic
9		1	Bracket Wldmt, Gas Regulator Mounting Ring
10	59125.0000	1	Fitting, 45° .25 FFL x .25 Barb SST
11	59116.0000	1	Fitting, 90° .25 Mpt x .25 Barb
12	59117.0000	1	Fitting, Str .25 Mpt x .25 Barb

The following items are not illustrated

11	54497.1000	1	Hose, Braided .25" ID x 12.0" (Cut to required length)
	54497.1001	1	Hose, Braided .25" ID x 36.0" (Cut to required length)
	54497.1002	1	Hose, Braided .25" ID x 120.0" (Cut to required length)

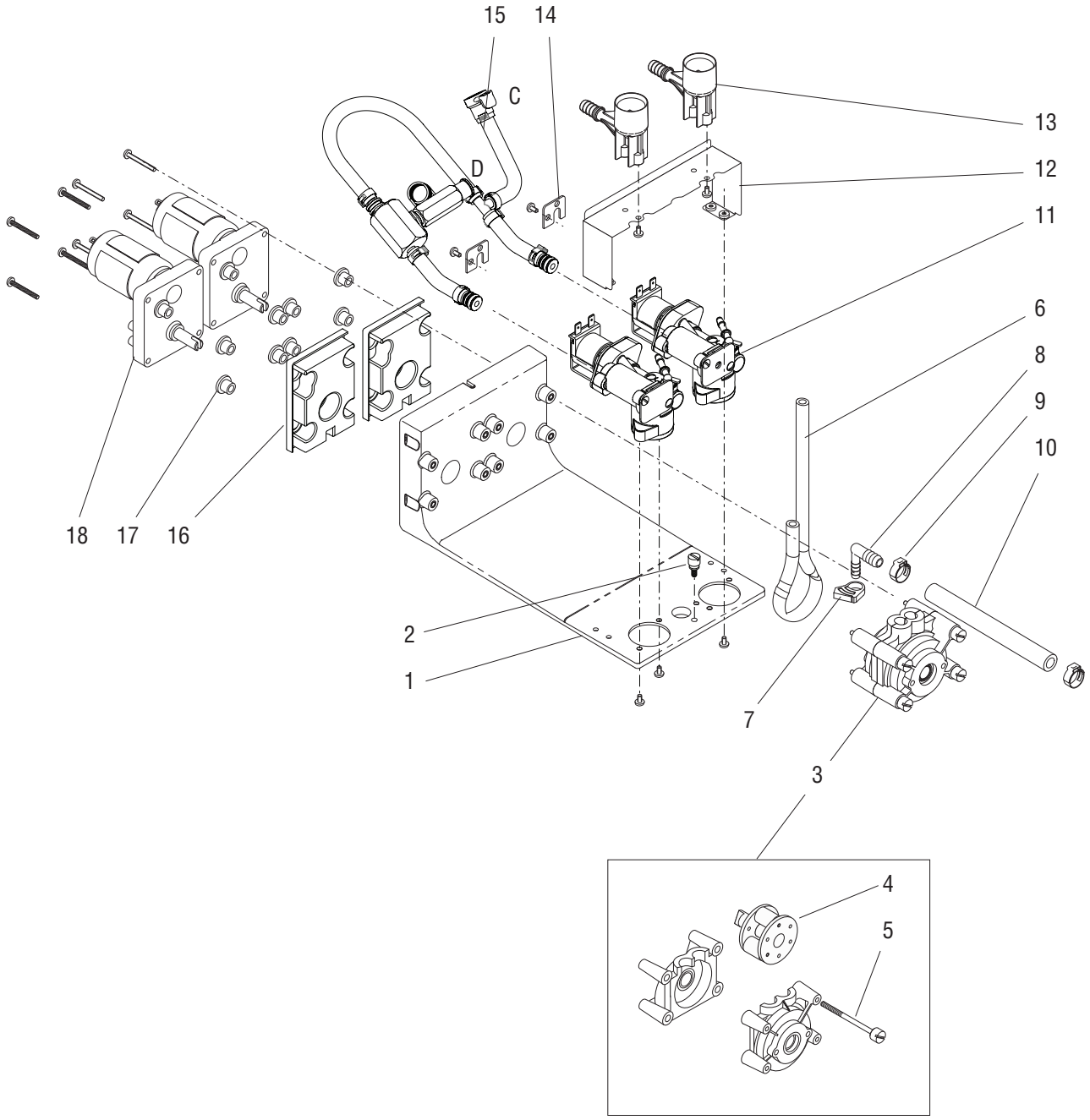

P4414.70

NOTE: Letters appearing within this illustration correspond to matching connections in other illustrations.

DISPENSE PLATFORM ASSEMBLY (STANDARD DISPENSE)

ITEM	PART NO.	QTY.	DESCRIPTION
-	38474.1011	1	Platform Assy (Includes items 1 - 19) (Standard Ratio)
1	38121.0003	1	Platform
2	38104.0000	1	Thumbscrew
3	28759.0000	2	Pump Head (Includes items 4 & 5)
4		2	Rotor (Order item 3)
5	01370.0001	8	Screw, Pan Head #8-32 x 2.45"
6		2	Tube, Norprene .25" ID x 17.0" lg (Order item 21, Standard Ratio)
	55011.1000	2	Kit, Pump Tube Assy CBDSPCT (High Ratio)
7	12422.0011	4	Clamp, Hose-Snap Type .40/.45ID (Standard Ratio)
	12422.0007	4	Clamp, Hose-Snap #1.5 (Hi Ratio)
8	32656.0000	2	Fitting, Elbow .25" Barb x .38" Barb (Standard Ratio)
	54281.0000	2	Fitting, Elbow .188" Barb x .38" Barb (Hi Ratio)
9	21275.0012	4	Clamp, SST-.563/.661 DIA#16.8 Green
10		2	Tube, Silicone .38ID x .62OD x 5.25 (Order item 20)
11	- - - - - - - -	2	Dispense Valve (See DISPENSE VALVE)
	01308.0000	4	Screw, Truss Head #6-32 x 25"
12	38660.0001	1	Bracket
	01308.0000	4	Screw, Truss Head #6-32 x 25"
13	38120.0005	2	Fitting, Bottle Adapter
	01308.0000	4	Screw, Truss Head #6-32 x 25"
14	37786.0001	2	Plate
	01308.0000	2	Screw, Truss Head #6-32 x 25"
15	- - - - - - - -	1	Manifold, Water (See WATER MANIFOLD)
16	33781.0000	2	Gasket
17	32957.0000	8	Bushing, Rubber
18	32613.1003	2	Motor Assy
	01322.0001	4	Screw #8-32 x 1.25"

The following items are not illustrated

19	38873.0001	1	Harness, Dispense Platform
20	20976.1000	-	Tube, Silicone - .375ID x 12.0" LG (Cut to required length)
	20976.1001	-	Tube, Silicone - .375ID x 36.0" LG (Cut to required length)
	20976.1002	-	Tube, Silicone - .375ID x 120.0" LG (Cut to required length)
21	55011.1001	-	Pump Tube Kit (Standard Ratio, Kit Includes 1 Tube for 1 Pump only)
	- - - - - - - -	1	Tube, Norprene .25" ID x 17.0" lg
	- - - - - - - -	1	Fitting, Elbow .25" Barb x .38" Barb
	- - - - - - - -	2	Clamp, Hose-Snap Type .40/.45ID
	- - - - - - - -	1	Fitting, Elbow .25 Barb
	- - - - - - - -	1	O-ring (.104 x .315) BUNA-N

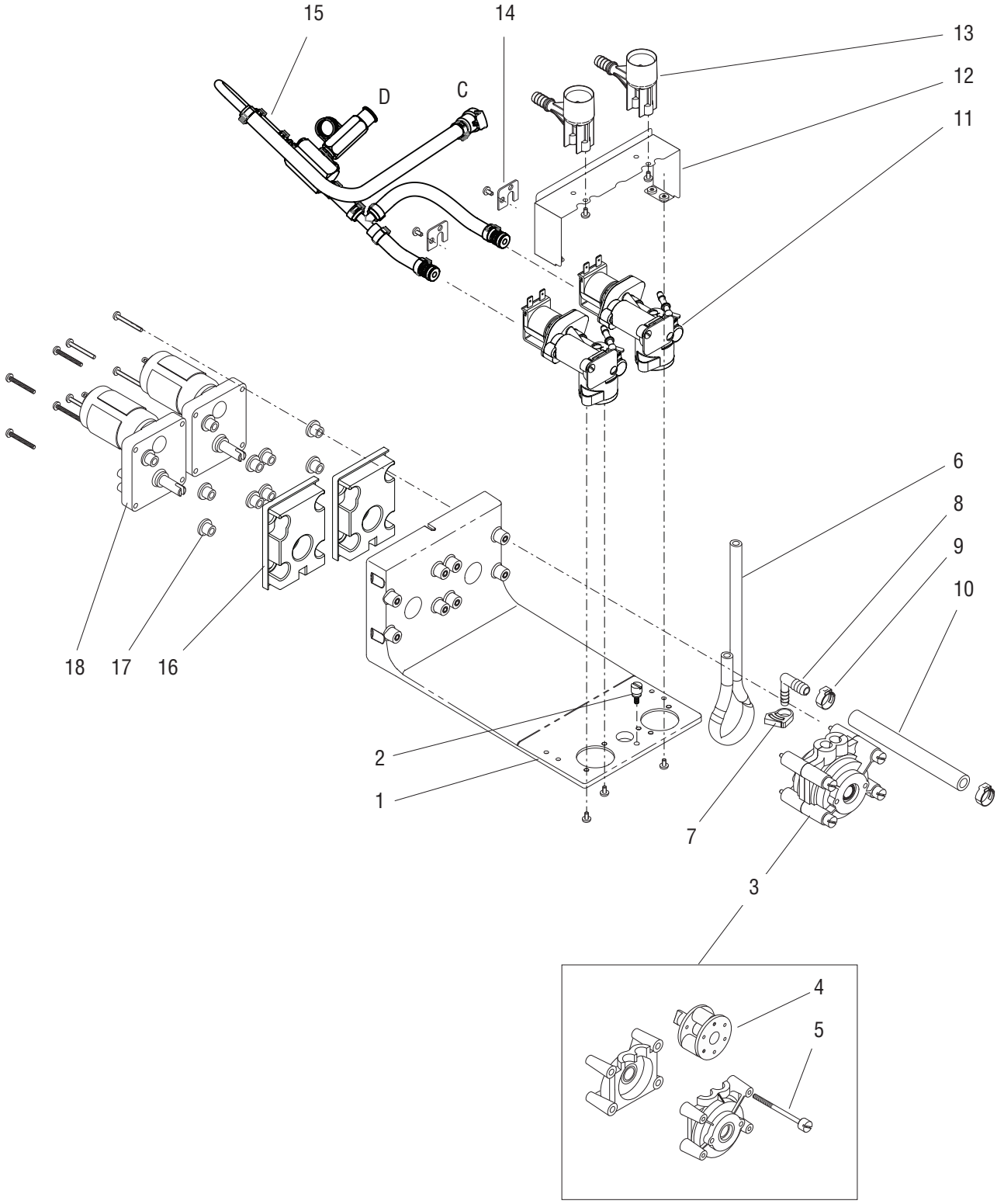

P4439.70

NOTE: Letters appearing within this illustration correspond to matching connections in other illustrations.

DISPENSE PLATFORM ASSEMBLY (DUAL NITROGEN DISPENSE)

ITEM	PART NO.	QTY.	DESCRIPTION
-	38474.1013	1	Platform Assy (Includes items 1 - 19)
1	38121.0003	1	Platform
2	38104.0000	1	Thumbscrew
3	28759.0000	2	Pump Head (Includes items 4 & 5)
4		2	Rotor (Order item 3)
5	01370.0001	8	Screw, Pan Head #8-32 x 2.45"
6		2	Tube, Norprene .25" ID x 17.0" lg (Order item 21, Standard Ratio)
7	12422.0011	4	Clamp, Hose-Snap Type .40/.45ID (Standard Ratio)
8	32656.0000	2	Fitting, Elbow .25" Barb x .38" Barb
9	21275.0012	4	Clamp, SST-.563/.661 DIA#16.8 Green
10		2	Tube, Silicone .38ID x .62OD x 5.25 (Order item 20)
11	- - - - - - - -	2	Dispense Valve (See NITROGEN DISPENSE VALVE)
	01308.0000	4	Screw, Truss Head #6-32 x 25"
12	38660.0001	1	Bracket
	01308.0000	4	Screw, Truss Head #6-32 x 25"
13	38120.0005	2	Fitting, Bottle Adapter
	01308.0000	4	Screw, Truss Head #6-32 x 25"
14	37786.0001	2	Plate
	01308.0000	2	Screw, Truss Head #6-32 x 25"
15	- - - - - - - -	1	Manifold, Water (See WATER MANIFOLD)
16	33781.0000	2	Gasket
17	32957.0000	8	Bushing, Rubber
18	32613.1003	2	Motor Assy
	01322.0001	4	Screw #8-32 x 1.25"

The following items are not illustrated

19	38873.0001	1	Harness, Dispense Platform
20	20976.1000	-	Tube, Silicone - .375ID x 12.0" LG (Cut to required length)
	20976.1001	-	Tube, Silicone - .375ID x 36.0" LG (Cut to required length)
	20976.1002	-	Tube, Silicone - .375ID x 120.0" LG (Cut to required length)
21	55011.1001	-	Pump Tube Kit (Standard Ratio, Kit Includes 1 Tube for 1 Pump only)
	- - - - - - - -	1	Tube, Norprene .25" ID x 17.0" lg
	- - - - - - - -	1	Fitting, Elbow .25" Barb x .38" Barb
	- - - - - - - -	2	Clamp, Hose-Snap Type .40/.45ID
	- - - - - - - -	1	Fitting, Elbow .25 Barb
	- - - - - - - -	1	O-ring (.104 x .315) BUNA-N 70

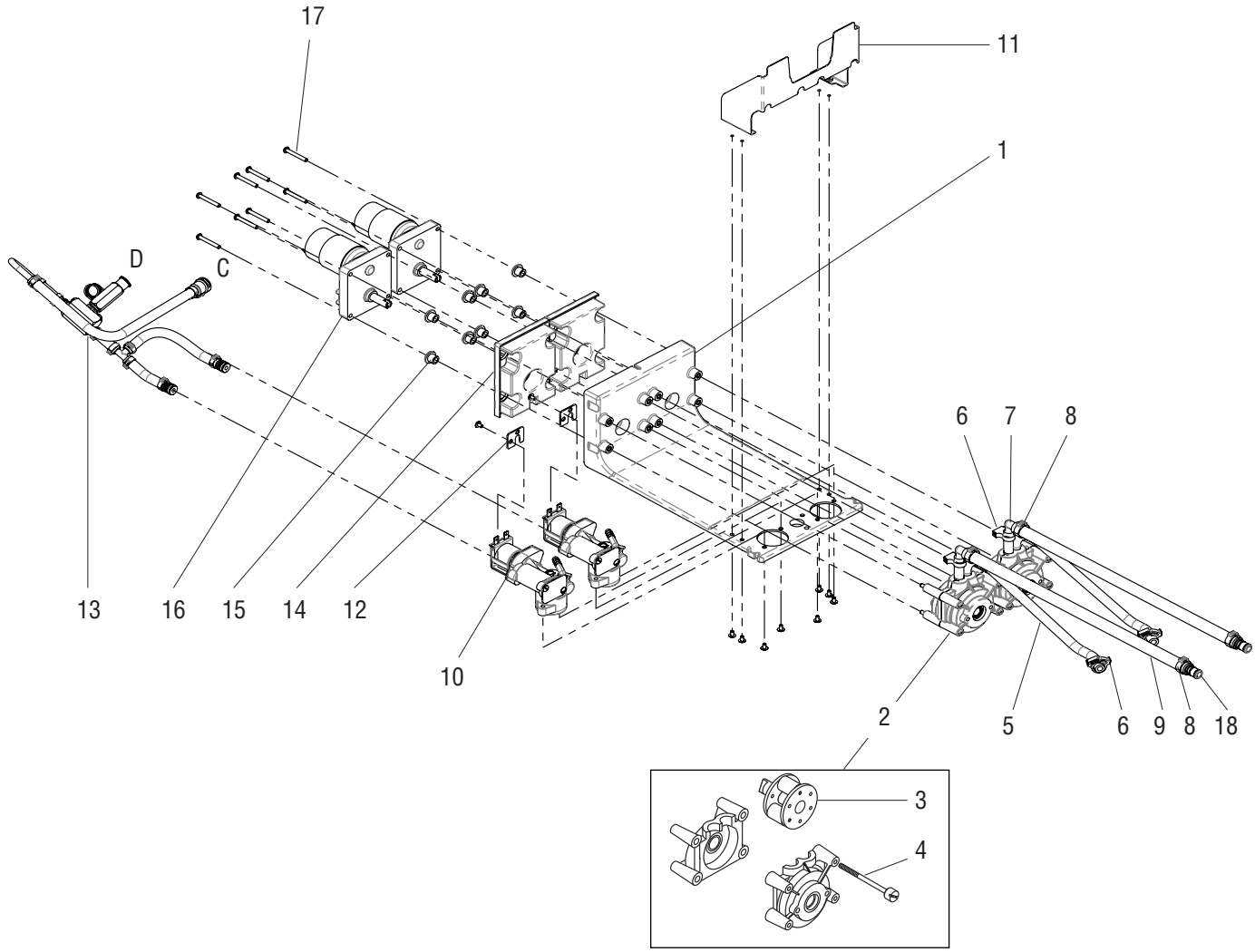

NOTE: Letters appearing within this illustration correspond to matching connections in other illustrations.

DISPENSE PLATFORM ASSY (DUAL NITROGEN DISP/SCHOLLE)

ITEM	PART NO.	QTY.	DESCRIPTION
-	38474.1015	1	Platform Assy (Includes items 1 - 18)
1	38121.0003	1	Platform
2	28759.0000	2	Pump Head (Includes items 3 & 4)
3		2	Rotor (Order item 2)
4	01370.0001	8	Screw, Pan Head #8-32 x 2.45"
5	----------	2	Tube, Norprene .25" ID x 17.0" lg (Order item 21, Standard Ratio)
6	12422.0011	4	Clamp, Hose-Snap Type .40/.45ID (Standard Ratio)
7	32656.0000	2	Fitting, Elbow .25" Barb x .38" Barb
8	21275.0003	4	Clamp .57"/.70"
9	----------	2	Tube, Silicone .313X.562X 14.00LG (Order item 20)
10	----------	2	Dispense Valve (See NITROGEN DISPENSE VALVE)
	01308.0000	4	Screw, Truss Head #6-32 x 25"
11	38660.0004	1	Bracket, Wldmnt Scholle Shelf Lower
	01308.0000	4	Screw, Truss Head #6-32 x 25"
12	37786.0002	2	Plate
	01308.0000	2	Screw, Truss Head #6-32 x 25"
13	38160.0005	1	Manifold Assy, Gas Infusion Dual Nitro
14	33781.0000	2	Gasket
15	32957.0000	8	Bushing, Rubber
16	32613.1003	2	Motor Assy
17	01322.0001	8	Screw #8-32 x 1.25"
18	34462.0000	2	Coupling, Male .375 Tube ID

The following items are not illustrated

19	38873.0001	1	Harness, Dispense Platform
20	28526.1000	-	Tube, Silicone .313 ID x 12.00" LG (Use as required)
	28526.1001	-	Tube, Silicone .313 ID x 36.00" LG (Use as required)
	28526.1002	-	Tube, Silicone .313 ID x 60.00" LG (Use as required)
21	55011.1001	-	Pump Tube Kit (Standard Ratio, Kit Includes 1 Tube for 1 Pump only)
	- - - - - - - -	1	Tube, Norprene .25" ID x 17.0" lg
	- - - - - - - -	1	Fitting, Elbow .25" Barb x .38" Barb
	- - - - - - - -	2	Clamp, Hose-Snap Type .40/.45ID
	- - - - - - - -	1	Fitting, Elbow .25 Barb
	- - - - - - - -	1	O-ring (.104 x .315) BUNA-N 70

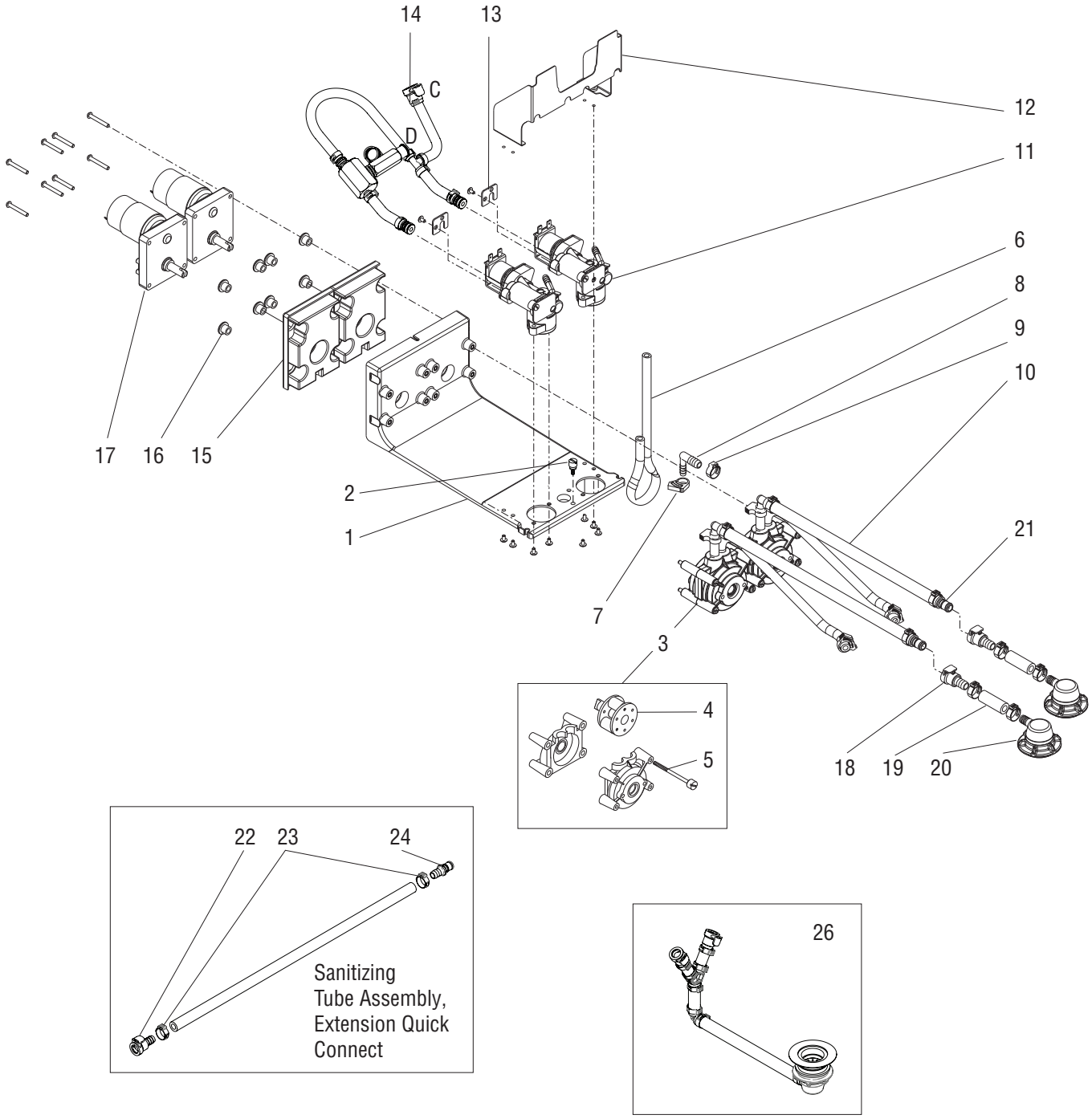

NOTE: Letters appearing within this illustration correspond to matching connections in other illustrations.

P4414.80

DISPENSE PLATFORM ASSEMBLY (STANDARD DISPENSE)

ITEM	PART NO.	QTY.	DESCRIPTION
-	38474.1012	1	Platform Assy (Includes items 1 - 17 & 26) (Standard Ratio, Scholle)
1	38121.0003	1	Platform
2	38104.0000	1	Thumbscrew
3	28759.0000	2	Pump Head (Includes items 4 & 5)
4		2	Rotor (Order item 3)
5	01370.0001	8	Screw, Pan Head #8-32 x 2.45"
6		2	Tube, Norprene .25" ID x 17.0" lg (Order item 29, Standard Ratio)
	55011.1000	2	Kit, Pump Tube Assy CBDSPCT (High Ratio)
7	12422.0011	4	Clamp, Hose-Snap Type .40/.45ID (Standard Ratio)
	12422.0007	2	Clamp, Hose-Snap #1.5 (Hi Ratio)
8	32656.0000	2	Fitting, Elbow .25" Barb x .38" Barb (Standard Ratio)
	54281.0000	2	Fitting, Elbow .188" Barb x .38" Barb (Hi Ratio)
9	21275.0003	4	Clamp, SST .571, .699 Diameter
10	----------	2	Tube, Silicone .313X.562X 14.00LG (Order item 28)
11	----------	2	Dispense Valve (See DISPENSE VALVE)
	01308.0000	4	Screw, Truss Head #6-32 x 25"
12	38660.0004	1	Bracket
	01308.0000	4	Screw, Truss Head #6-32 x 25"
13	37786.0002	2	Plate
	01308.0000	2	Screw, Truss Head #6-32 x 25"
14	- - - - - - - -	1	Manifold, Water (See WATER MANIFOLD)
15	33781.0000	2	Gasket
16	32957.0000	8	Bushing, Rubber
17	32613.1003	2	Motor Assy
	01322.0001	4	Screw #8-32 x 1.25"
18	34463.0000	1	Coupling, Female .375 Tube ID
19		1	Tube, Silicone .313 ID x 1.5" (Order item 28)
20	35057.0002	1	Connector, Scholle #1910 L 3/8"
	35057.0003	1	Connector, Scholle Bag Side #1900/900(Not Illustrated- Used For In Place Cleaning)
21	34462.0000	1	Coupling, Male .375 Tube ID
			Clamp, SST .571, .699 Diameter
22	55325.0000	1	Sanitizing Tube Assembly, Extension Quick Connect (Includes items 22, 23 & 24)
23	34463.0000	1	Coupling, Female .375 Tube ID
24	21275.0003	4	Clamp, SST .571, .699 Diameter
25	34462.0000	1	Coupling, Male .375 Tube ID
26	55011.1005	1	Tube Assembly, Scholle SR Y-Fitting
The following items are not illustrated			
27	38873.0001	1	Harness, Dispense Platform
28	28526.1000	-	Tube, Silicone .313 ID x 12.00" LG (Use as required)
	28526.1001	-	Tube, Silicone .313 ID x 36.00" LG (Use as required)
	28526.1002	-	Tube, Silicone .313 ID x 60.00" LG (Use as required)
29	55011.1001	-	Pump Tube Kit (Standard Ratio, Kit Includes 1 Tube for 1 Pump only)
	- - - - - - - -	1	Tube, Norprene .25" ID x 17.0" lg
	- - - - - - - -	1	Fitting, Elbow .25" Barb x .38" Barb
	- - - - - - - -	2	Clamp, Hose-Snap Type .40/.45ID
	- - - - - - - -	1	Fitting, Elbow .25 Barb
	- - - - - - - -	1	O-ring (.104 x .315) BUNA-N 70

STILL WATER DISPENSE VALVE ASSEMBLY

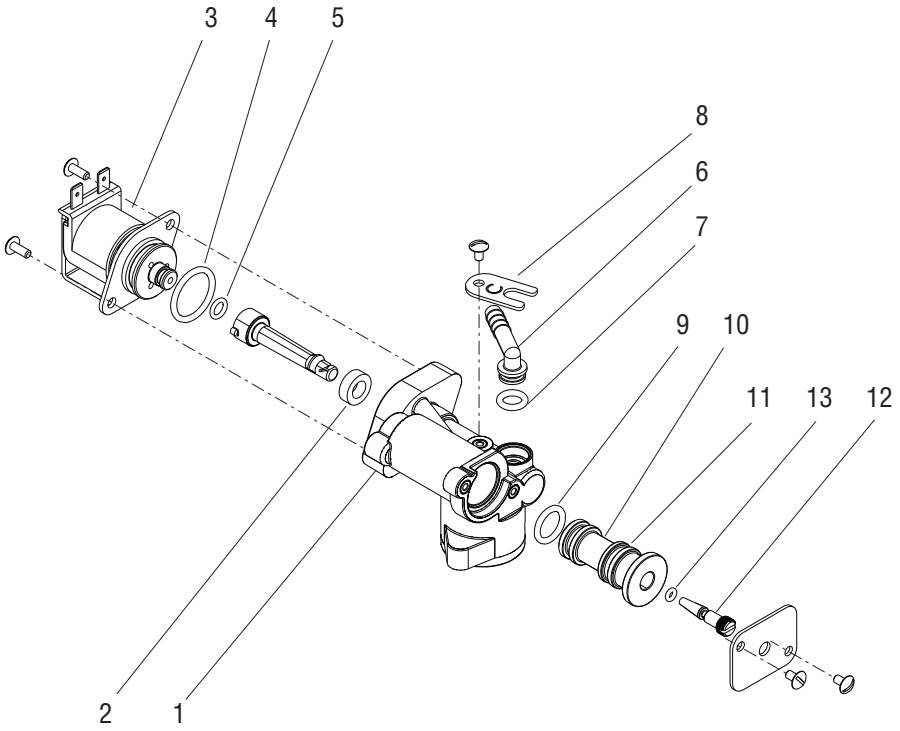

P4415.35

STILL WATER DISPENSE VALVE ASSEMBLY

ITEM	PART NO.	QTY.	DESCRIPTION
-	38018.1003	1	Dispense Valve Assy (Includes items 1 - 13)
1	37801.0003	1	Body
2	37990.0000	1	Gasket
3	32252.0001	1	Valve, Solenoid (Includes items 4 & 5)
	01347.0000	2	Screw, Truss Head 6-32 x .38"
4	33580.0000	1	O-ring
5	33553.0000	1	O-ring
6	32463.0000	1	Fitting, Elbow
7	32849.0001	1	O-ring (Also use item 14)
8	37853.0001	1	Clamp
	01308.0000	1	Screw #6-32 x .25"
9	24733.0006	1	O-ring (Also use item 14)
10			
11	24733.0017	1	O-ring (Also use item 14)
12	43117.0001	1	Needle Valve
13	24733.0016	1	O-ring (Also use item 14)
14	44023.0001	-	Lube, Silicone HAYNES 1 oz. Tube (Not illustrated - Use when assembling items 7, 9,11 & 13)

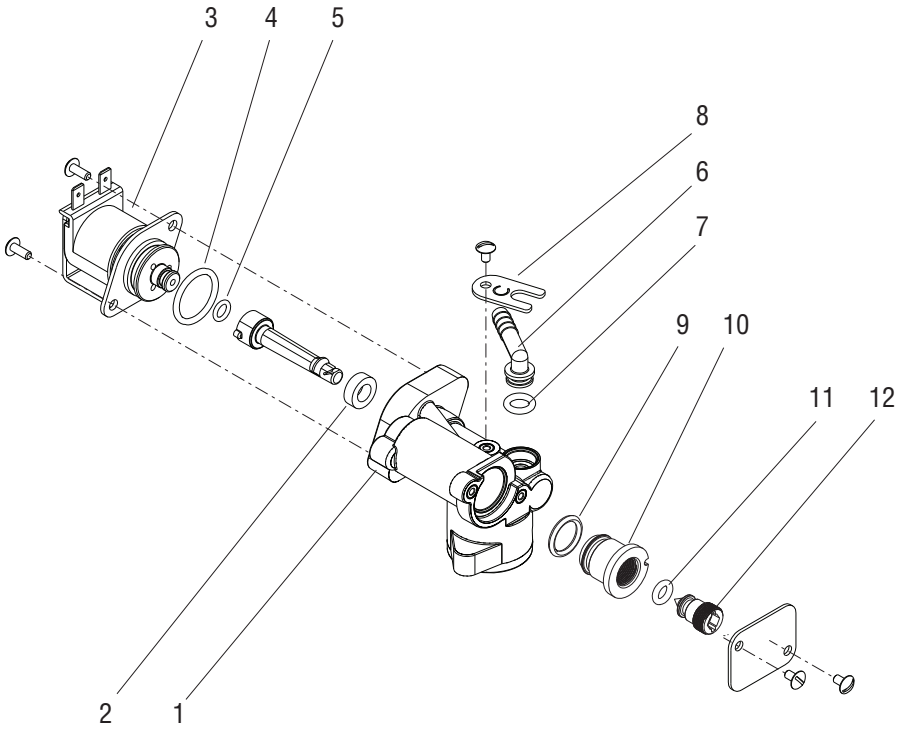

P4432.35

NITROGEN DISPENSE VALVE ASSEMBLY

ITEM	PART NO.	QTY.	DESCRIPTION
-	38018.1004	1	Dispense Valve Assy (Includes items 1 - 13)
1	37801.0003	1	Body
2	37990.0000	1	Gasket
3	32252.0001	1	Valve, Solenoid (Includes items 4 & 5)
	01347.0000	2	Screw, Truss Head 6-32 x .38"
4	33580.0000	1	O-ring
5	33553.0000	1	O-ring
6	32463.0000	1	Fitting, Elbow .25 Barb (Standard Ratio)
	32463.0002	1	Fitting, Elbow .188 Barb (Hi Ratio)
7	32849.0001	1	O-ring (Also use item 13)
8	37853.0001	1	Clamp
	01308.0000	1	Screw #6-32 x .25"
9	24733.0017	1	O-ring (Also use item 13)
10	32624.0002	1	Bonnet Adjuster -BP
11	32851.0000	1	O-ring (Also use item 13)
12	32623.0002	1	Positioner Adjuster -BP
13	44023.0001	-	Lube, Silicone HAYNES 1 oz. Tube (Use when assembling items 7,9,11 & 13)

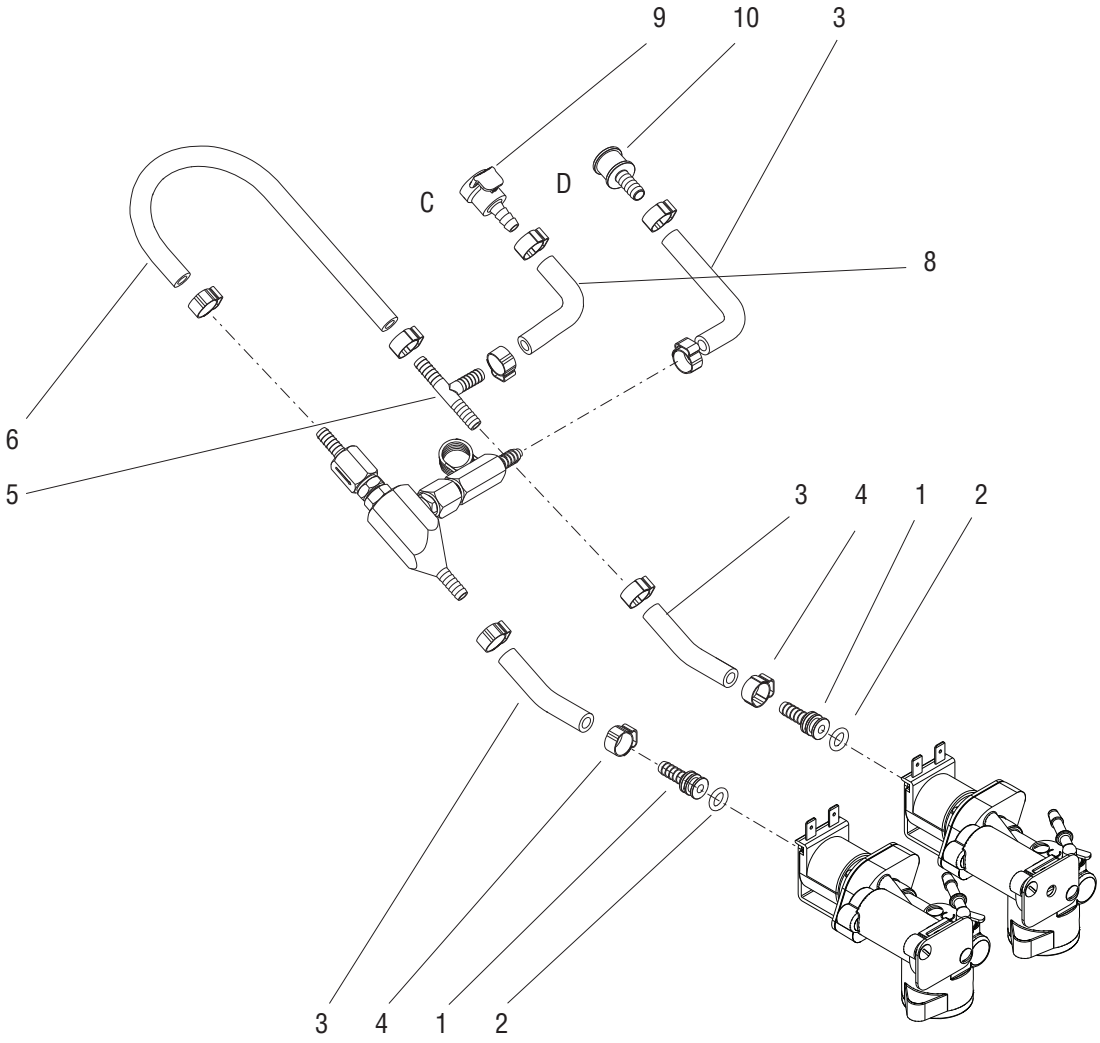

2nd Generation

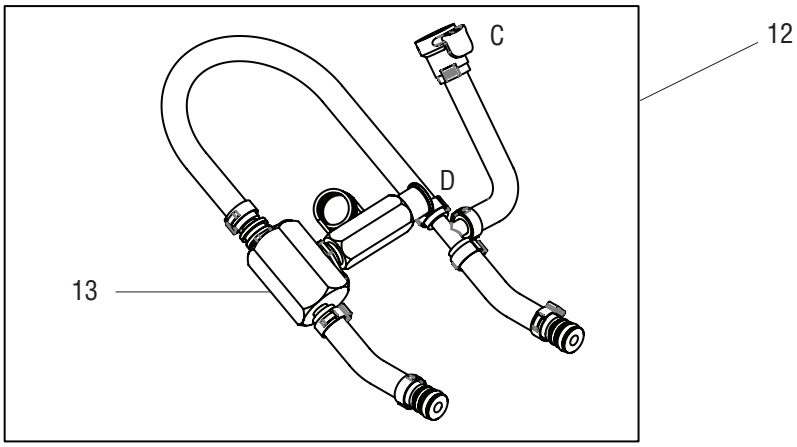

P4416.01

WATER MANIFOLD

ITEM	PART NO.	QTY.	DESCRIPTION
1	32631.0003	2	Fitting, Straight
2	32849.0001	2	O-ring
3		3	Hose, Braided .25" ID x 3.5" (Order item 11)
4	21275.0001	10	Clamp .425 - .523"
5	38605.0000	1	Tee .25" Barb
6		1	Hose, Braided .25" ID x 10.0" (Order item 11)
7			
8		1	Hose, Braided .25" ID x 2.50" (Order item 11)
9	34461.0000	1	Coupling, Quick Disconnect, Female
10	51525.0000	1	Fitting
11	54497.1000	1	Hose, Braided .25" ID x 12.0" (Cut to required length)
	54497.1001	1	Hose, Braided .25" ID x 36.0" (Cut to required length)
	54497.1002	1	Hose, Braided .25" ID x 120.0" (Cut to required length)
12	38160.0004	1	Manifold Assy, Gas Infusion (2nd Generation)
13	48936.1005	1	Gas Infuser, In-line Orifice 300CCM (2nd Generation)

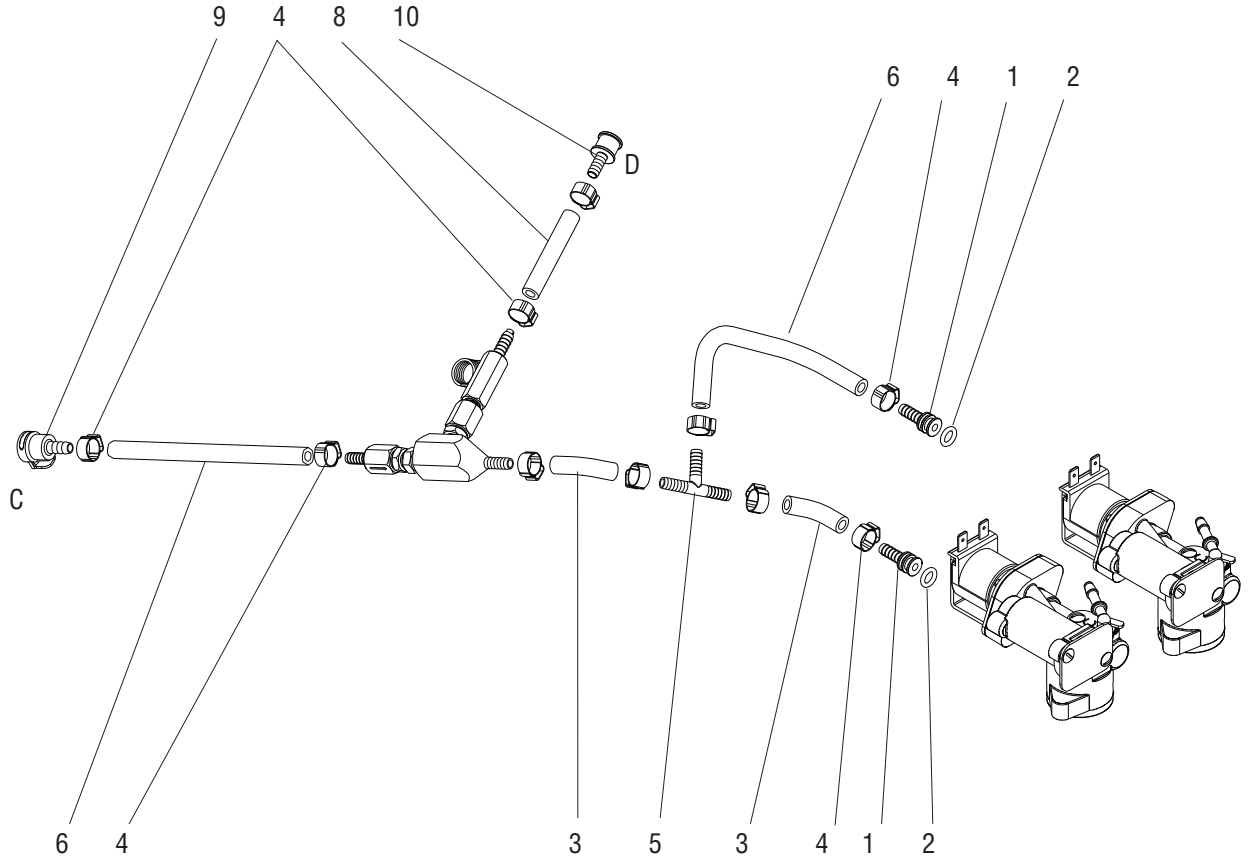

2nd Generation

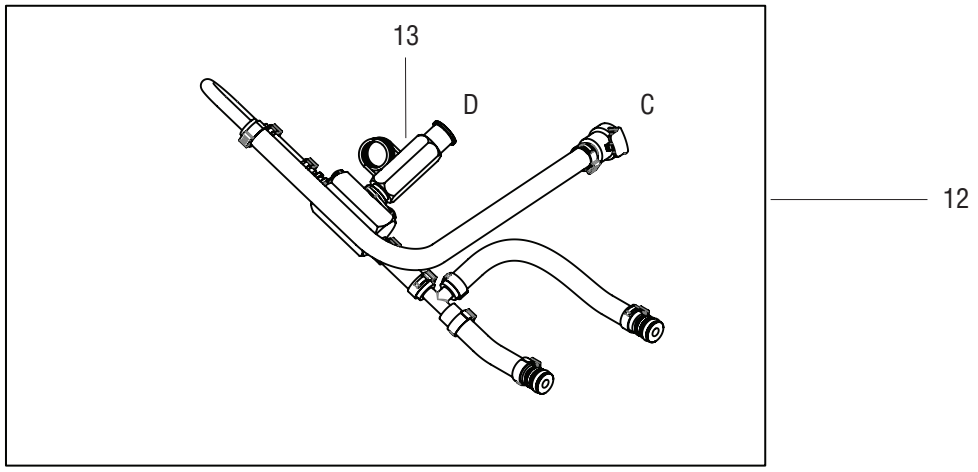

P4440.01

WATER MANIFOLD (DUAL NITROGEN DISPENSE)

ITEM	PART NO.	QTY.	DESCRIPTION
-	38160.0005	1	Manifold Assy, Gas Infusion Dual Nitro (Includes items 1-10)
1	32631.0003	2	Fitting, Straight
2	32849.0001	2	O-ring
3		2	Hose, Braided .25" ID x 1.5" (Order item 11)
4	21275.0001	10	Clamp .425 - .523"
5	32760.0000	1	Tee .25" Barb
6		2	Hose, Braided .25" ID x 6.0" (Order item 11)
7			
8		1	Hose, Braided .25" ID x 2.50" (Order item 11)
9	34461.0000	1	Coupling, Quick Disconnect, Female
10	51525.0000	1	Fitting
11	54497.1000	1	Hose, Braided .25" ID x 12.0" (Cut to required length)
	54497.1001	1	Hose, Braided .25" ID x 36.0" (Cut to required length)
	54497.1002	1	Hose, Braided .25" ID x 120.0" (Cut to required length)
12	38160.0005	1	Manifold Assy, Gas Infusion Dual (2nd Generation)
13	48936.1005	1	Gas Infuser, In-line Orifice 300CCM (2nd Generation)

DOOR ASSEMBLY (CONTINUED)

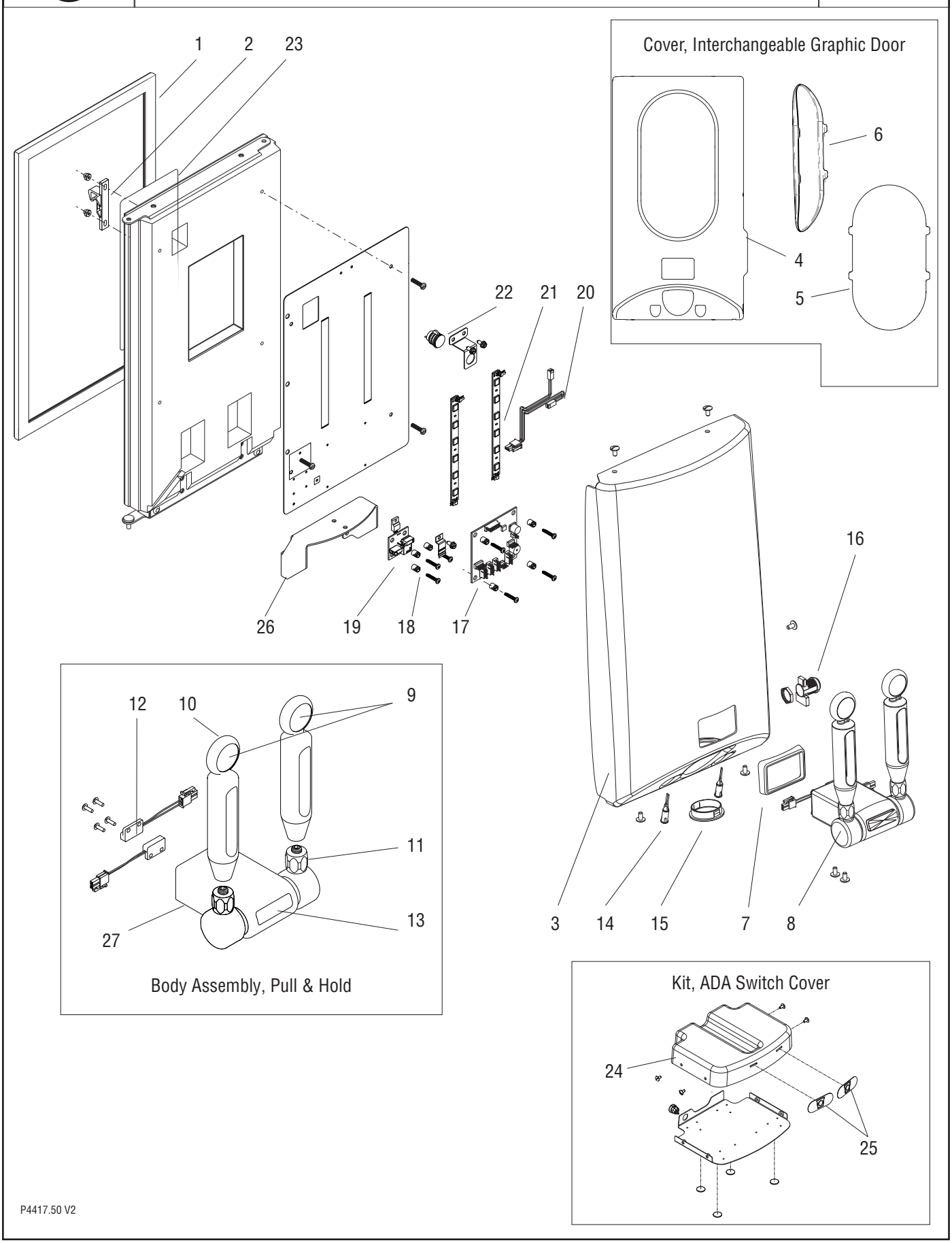

P4417.50 V2

DOOR ASSEMBLY (CONTINUED)

ITEM	PART NO.	QTY.	DESCRIPTION
1	38568.0002	1	Gasket, Door
2	34667.0000	1	Keeper, Door Latch
	02319.0000	2	Nut, Acorn
	01501.0000	2	Washer
3			
	53214.0003	1	Cover, Graphic Form, nitron² All Black
	02331.0001	5	Screw, Truss Head, Blk #10-32 x .375"
4	55217.0001	1	Cover, Door Front (Interchangeable Graphic Style)
5	55252.1000	1	Insert, Standard Graphic
6	55248.0000	1	Lens, Graphic Cover
7	53207.0000	1	Gasket, Door Handle
8	53210.1000	1	Body & Pull & Hold Assy (Complete Assy)
	01330.0000	2	Screw
9	53216.0008	1	Decal, Handle Multi Nitro Flavors
10	53213.1000	2	Kit, Handle Pull - No Flavor Labels (Qty-1, Includes item 11)
11	53215.0000	2	Nut, Handle 3/8"-16 UNC
12	51855.0001	2	Switch Assy, Reed 2 Pin Connector
13	54187.0000	1	Decal, Bunn Logo
14	36903.0000	2	LED, Blue
15	53240.0000	1	Plug
16	32863.0000	1	Keylock w/Keys
17	40875.1000	1	Circuit Board, Portion Control
18	29081.0005	7	Spacer, Circuit Board
19	41727.1000	1	Circuit Board
20	42609.0001	1	Wiring Harness
21	42593.0000	2	LED
22	53859.0001	1	LED
23	44719.0003	1	Decal, Cleaning
	44719.8753 (Chinese)	1	Decal, Cleaning
24	58139.0000	1	Kit, Switch Cover 2 Valve CBDSPCT
25	50489.1000	2	Kit, Switch Memb One Button
26	53212.0000	1	Bracket, Handle Body Mtg
	02331.0000	4	Screw,Trh Sltd w/Serr10-32x.38
27	53211.1000	1	Kit, Body Assembly (Item 10 Not Included

DOOR ASSEMBLY

NITRON$_2$

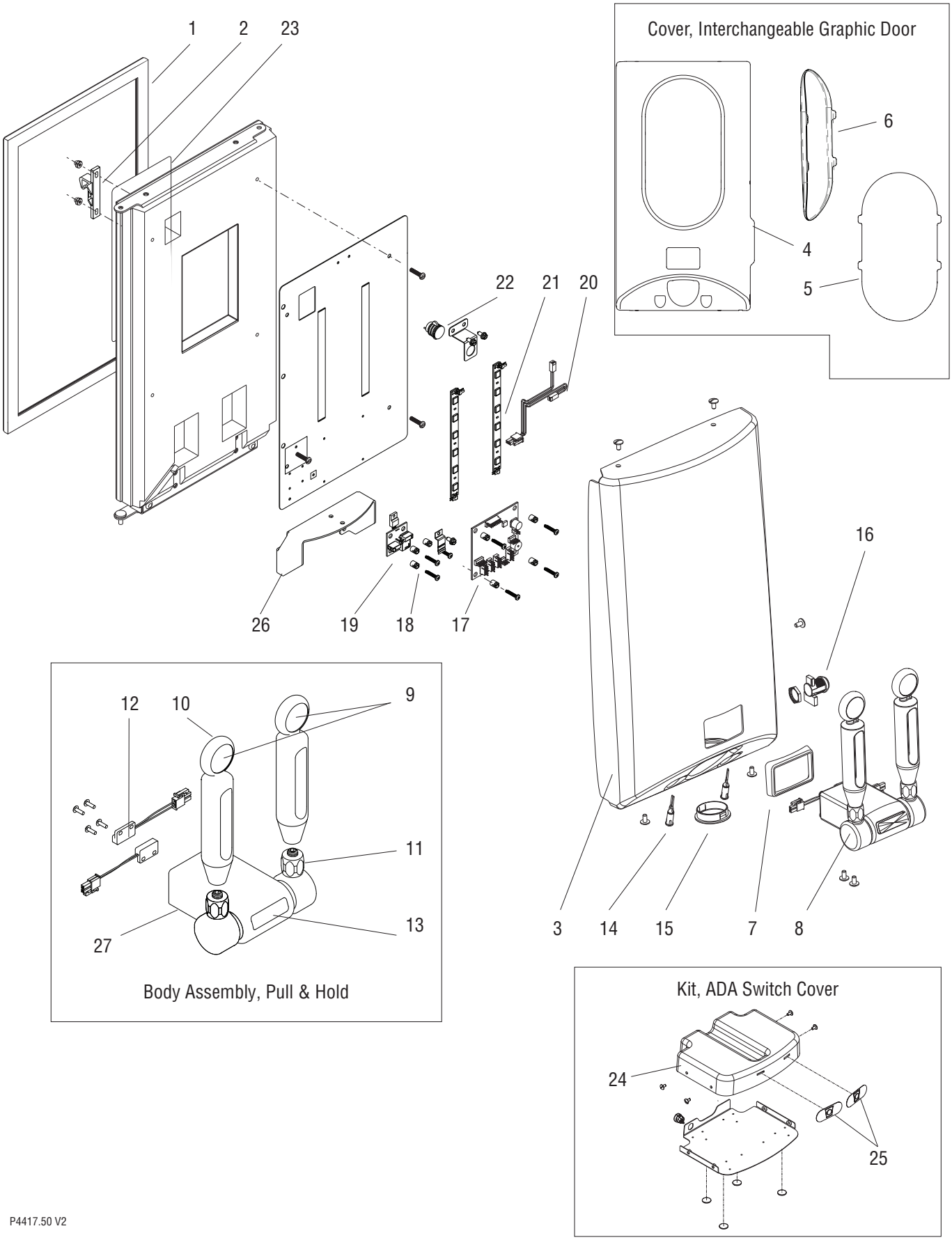

P4417.50 V2

020321

DOOR ASSEMBLY (CONTINUED)

ITEM	PART NO.	QTY.	DESCRIPTION
The following items are not illustrated			
28	53921.0000*	1	Wiring Harness, Dispense Switch
29	53923.0000*	1	Wiring Harness, LEDs
30	53924.0000*	1	Wiring Harness, Handle Switch
31	45854.0000	1	Wiring Harness, SW Cover Assy - 2 & 4 Valve
32	45855.0000	1	Wiring Harness, Lt Adapter SW Cover Assy
33	45858.0000	1	Wiring Harness, Mem SW Cover JDF-2 S

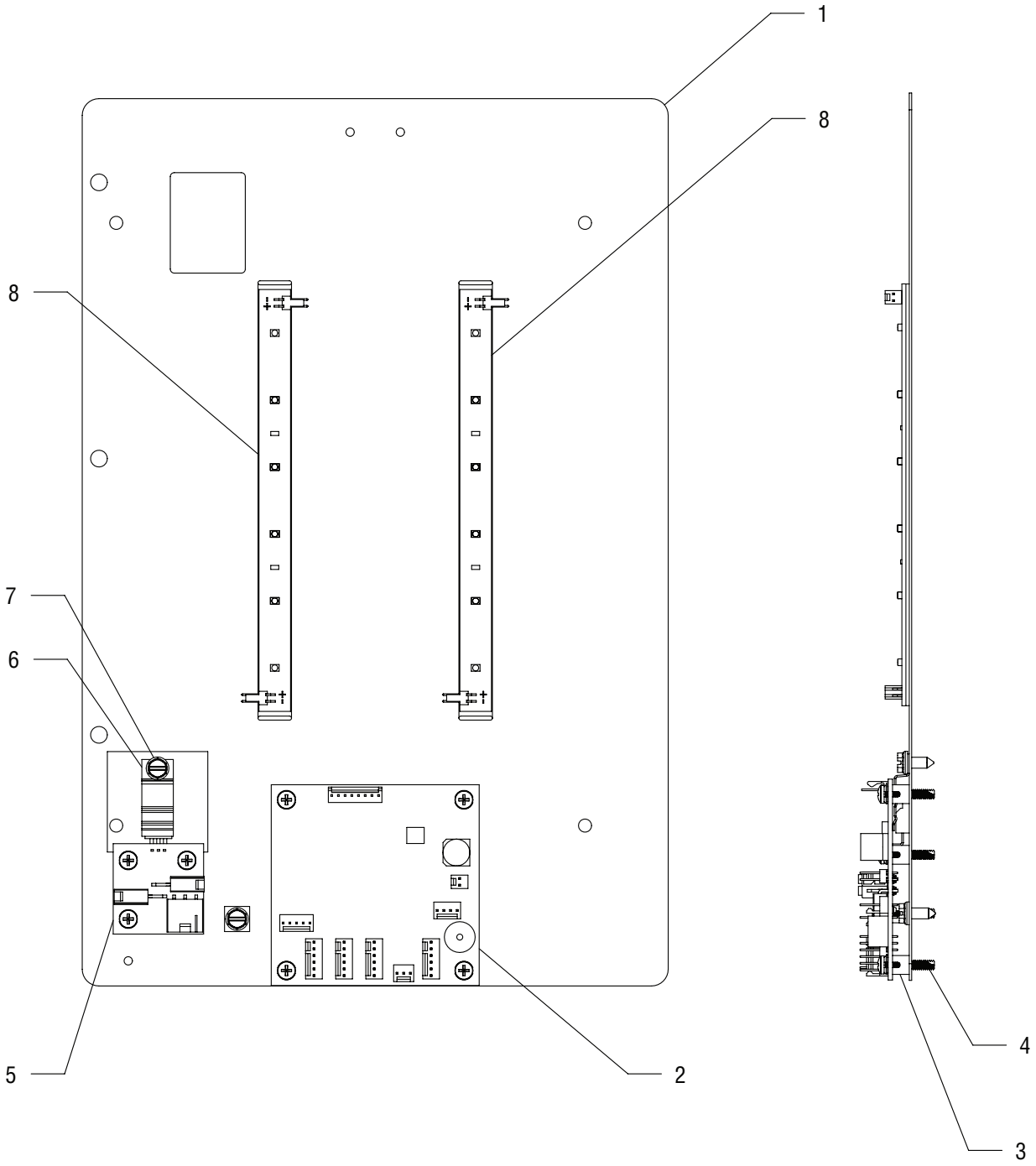

Note: Inner door panel does not have the Nitrogen Empty Red LED Indicator.

INNER DOOR PANEL - WITHOUT NITROGEN EMPTY RED LED

ITEM	PART NO.	QTY.	DESCRIPTION
1		1	Panel, Light White CBDSPCT
2	40875.1000	1	CBA, JDFS PC SW ROHS
3	29081.0005	7	Spacer, Control Board Mounting #6 X .250 Lg
4		7	Screw, Phn Cross Rec 6-20 x .75
5	41727.1000	1	CBA, LED Backlight Regulator
6		1	Clip, Spring
7	02335.0001	2	Screw, Hex Crimptite -"AB" #8 x .38
8	42593.0001	2	CBA, 6 LED 6.300 x .472
The following items are not illustrated			
9	42609.0001	1	Wiring Harness, LED/CBA
10	53921.0000	1	Wiring Harness, Door-PC Dispense Switch
11	59001.0000	1	Wiring Harness, Door Blue LEDs
12	53924.0000	1	Wiring Harness, Door-PC Handle Switch
13	36329.0000	4	Tie, Cable-Nylon Blk 4.04 Lg

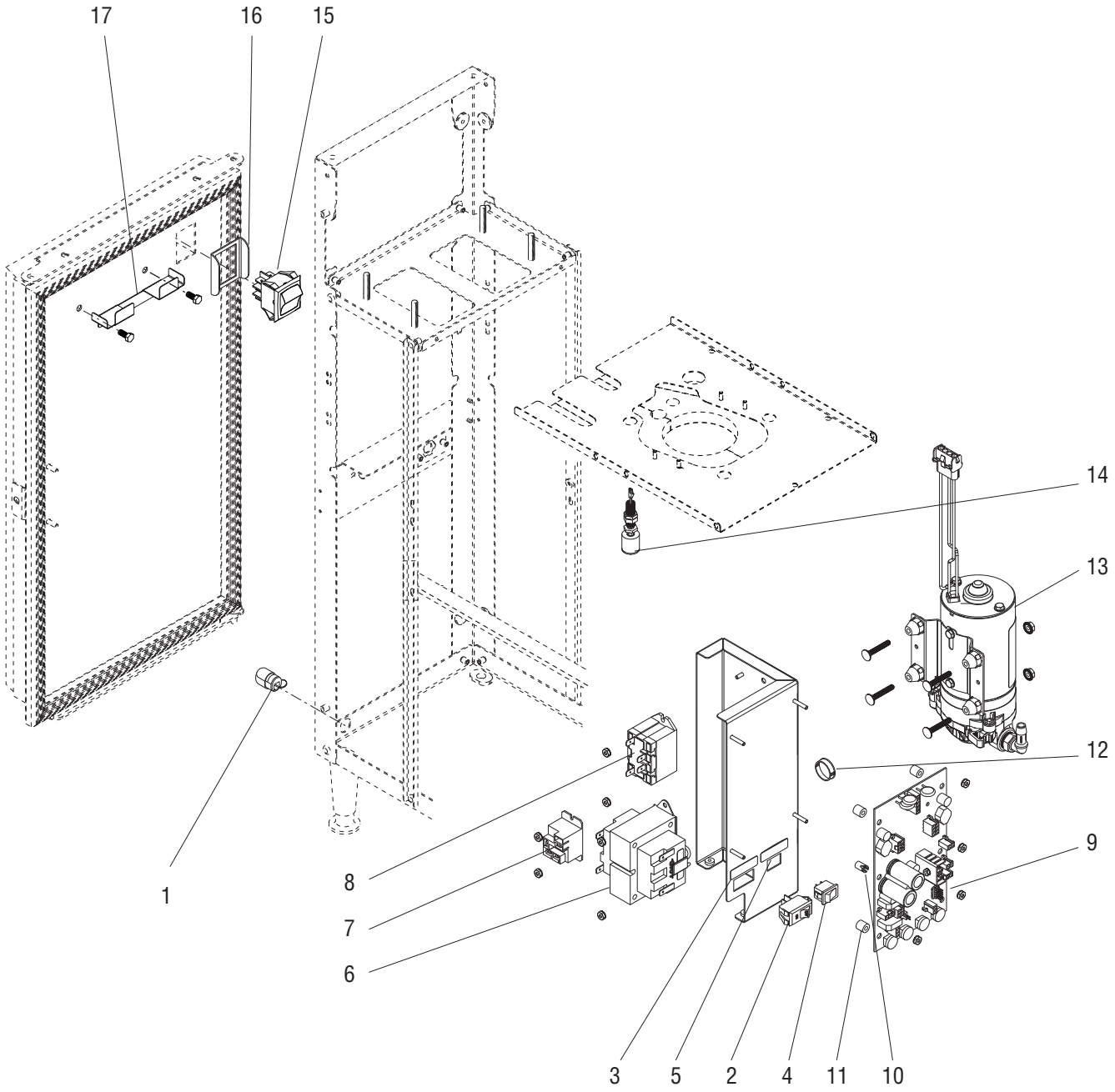

P4418.50

ELECTRICAL COMPONENTS

ITEM	PART NO.	QTY.	DESCRIPTION
1	00707.0000	1	Bushing, Strain Relief
2	04786.0005	1	Switch, ON/OFF
3	41509.0001	1	Decal, Compressor ON/OFF
4	20317.0004	1	Switch, Program
5	41509.0004	1	Decal, Program Mode
	41509.0006	1	Decal, Set N_2Pressure
6	39305.0000	1	Transformer, 120V
	39417.0001	1	Transformer, 230V
	00973.0000	2	Nut, Keps #6-32
7	32104.0001	1	Relay, 24V Coil
	00973.0000	2	Nut, Keps #6-32
8	37711.1002	1	Relay, 120V
	37711.0001	1	Relay, 240V
	00973.0000	2	Nut, Keps #6-32
9	40177.1006	1	Circuit Board
	00973.0000	4	Nut, Keps #6-32
10	29081.0000	2	Spacer
11	01533.0000	4	Spacer
12	27354.0000	1	Snap Bushing
13	48350.1003	1	Pump Assy, 120V (Includes Mounting Hardware)
	48350.1005	1	Pump Assy, 230V
14	55112.0001	1	Switch Assy, .58 Dia Float w/Bhd & Nut
15	52922.0000	1	Switch, Dispense ON/OFF
16	54378.0001	1	Bracket, Switch
17	49633.1000	1	Kit, Tube Bracket
	02340.0000	2	Screws
The following items are not illustrated			
19	20630.0013	1	Power Cord 120V
	42749.0037 (EURO)	1	Power Cord Assy, 230V
	28111.0016 (UK)	1	Power Cord Assy, 240V
	27728.0009	1	Power Cord Assy, 230V CE
20	38870.0002	1	Wiring Harness, Transformer to Circuit Bd.
21	48603.0001	1	Wiring Harness, Pump Motor
22	41203.0001	1	Wiring Harness, Dispense/Disable Switch
23	53930.0000	1	Wiring Harness, Main - Low Voltage
24	53931.0000	1	Wiring Harness, Main - High Voltage
25	53931.0000	1	Wiring Harness, B38G5L Comp, Cap Ext.
26	38873.0001	1	Wiring Harness, Platform
27	41202.0008	1	Wiring Harness, Door
28	53890.0000	1	Wiring Harness, Pump
	53890.0001	1	Wiring Harness, Pump to Main Harness 230V (Includes item 25)
29	53882.0000	1	Fuse 1.25A
	53882.0001	1	Fuse .08A, 230V
30	53921.0000	1	Wiring Harness, Door-PC Dispense Switch
31	53923.0000	1	Wiring Harness, Door-PC LEDs
32	53924.0000	1	Wiring Harness, Door-PC Handle Switch

REFILLABLE CONTAINER ASSEMBLY

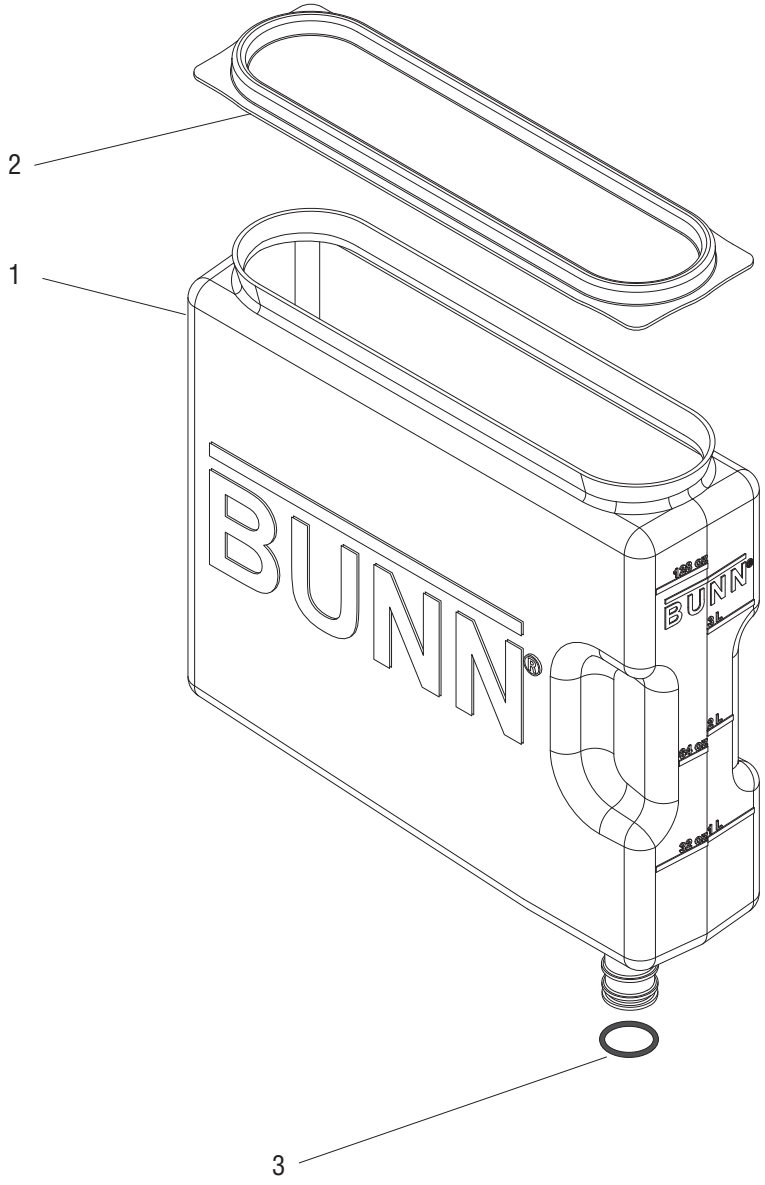

P3791

REFILLABLE CONTAINER ASSEMBLY

ITEM	PART NO.	QTY.	DESCRIPTION
1	39302.0000	1	Container Assy (Includes items 1-3)
2	39299.0000	1	Lid
3	34261.0000	1	O-ring

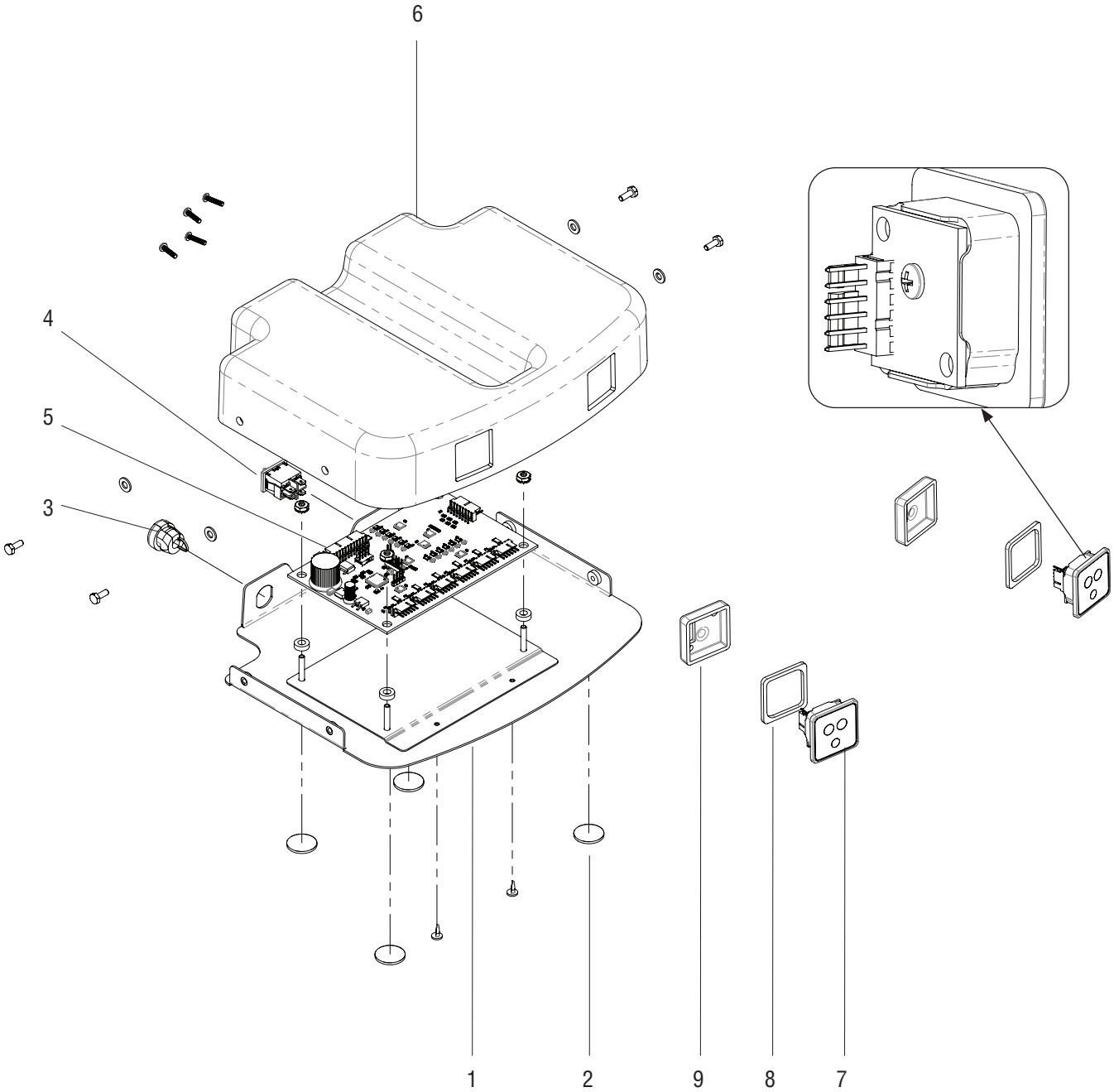
6
4
5
3
1
2
9
8
7

TOUCHLESS SENSOR TECHNOLOGY KIT

ITEM	PART NO.	QTY.	DESCRIPTION
	45536.1004	1	Kit, TST 2 Valve Nitron
1	45540.0005	1	Panel Wldmt, TST/CBA Mtg 2 Valve Nitron
2	39443.1003	4	Kit, Pad Adhesive Back .750 x .062
3	00707.0001	1	Bushing, Strain RLF-STR 6L-1
4	57806.0000	1	Switch, On/Off 10A 125VAC DPST Rocker
5	57669.1000	1	Kit, JDF/NITRON Touchless Interface CBA
	00973.0000	4	Nut, Keps 6-32 Zinc Plate
	01533.0000	4	Spacer, Nyl - .171 ID x .375 OD x .375
6	45537.0004	1	Cover, TST Mtg 2 Valve Nitron
	02340.0001	4	Screw, Hex Hd-SST - 8-32 x .38
	01522.0001	4	Washer, Flat - .187 ID x .375 OD SST
7	57699.1000	2	Kit, Bezel Assy w/Overlay Seal TST (Includes item 8, 9 & 14)
	38837.0000	4	Screw, Pnh #4 type 25 x .50 (2 Screws per Bezel Assy)
8	57666.0000	2	Seal, TST Bezel
9	57559.0000	2	Retainer, Touchless Sensor Tech

the following items are not illustrated

10	57673.0000	1	Wiring Harness, Interface to Main CBA
11	57672.0000	1	Wiring Harness, Sensor to Interface
12	57671.0000	1	Wiring Harness, Switch to Interface
13	57674.0000	1	Wiring Harness, Y-Adapter AC Power