NITRON® 4X

Cold Brew and Nitro Coffee Dispenser



INSTALLATION & OPERATING GUIDE

For Technical Service, contact Bunn-O-Matic Corporation at 1-800-286-6070.

Bunn-O-Matic Corporation
Post Office Box 3227, Springfield, Illinois 62708-3227
Phone (217) 529-6601 | Fax (217) 529-6644

59407.0000 A 02/26 © 2026 Bunn-O-Matic Corporation

BUNN-O-MATIC COMMERCIAL PRODUCT WARRANTY

Bunn-O-Matic Corp. (“BUNN”) warrants equipment manufactured by it as follows:

1) All coffee and tea dispensers/servers, MCR/MCP/MCA single cup brewers, and BUNNlink® electronic circuit and/or control boards – 1 year parts and 1 year labor.
2) Product-specific warranties for Premia™,Crescendo®, Fast Cup®, Sure Immersion®, Sure Tamp® and others – 1 year parts and 1 year labor. Please visit commercial.bunn.com/support/warranty-lookup for further details.
3) All other equipment – 2 years parts and 1 year labor plus added warranties as specified below:
   a) Electronic circuit and/or control boards – parts and labor for 3 years.
   b) Compressors on refrigeration equipment – 5 years parts and 1 year labor.
   c) Grinding burrs on coffee grinding equipment for 4 years or 40,000 pounds of coffee, whichever comes first.
4) For customers subscribed to BUNNlink®, BUNN reserves the right to periodically auto-push critical software updates that will enhance functionality or performance of the BUNN equipment, unless the customer requests advance notice of such software updates from BUNN in writing.

These warranty periods run from the date of installation. BUNN warrants that the equipment manufactured by it will be commercially free of defects in material and workmanship existing at the time of manufacture and appearing within the applicable warranty period. This warranty does not apply to any equipment, component or part that was not manufactured by BUNN or that, in BUNN’s judgment, has been affected by misuse, neglect, alteration, improper installation or operation, improper maintenance or repair, non periodic cleaning and descaling, equipment failures related to poor water quality, damage or casualty. In addition, the warranty does not apply to replacement of items subject to normal wear with use including but not limited to user replaceable parts such as seals and gaskets. This warranty is conditioned on the Buyer 1) giving BUNN prompt notice of any claim to be made under this warranty by telephone at (217) 529-6601 or by writing to Post Office Box 3227, Springfield, Illinois 62708-3227; 2) if requested by BUNN, shipping the defective equipment prepaid to an authorized BUNN service location; and 3) receiving prior authorization from BUNN that the defective equipment is under warranty.

THE FOREGOING WARRANTY IS EXCLUSIVE AND IS IN LIEU OF ANY OTHER WARRANTY, WRITTEN OR ORAL, EXPRESS OR IMPLIED, INCLUDING, BUT NOT LIMITED TO, ANY IMPLIED WARRANTY OF EITHER MERCHANTABILITY OR FITNESS FOR A PARTICULAR PURPOSE. The agents, dealers or employees of BUNN are not authorized to make modifications to this warranty or to make additional warranties that are binding on BUNN. Accordingly, statements by such individuals, whether oral or written, do not constitute warranties and should not be relied upon.

If BUNN determines in its sole discretion that the equipment does not conform to the warranty, BUNN, at its exclusive option while the equipment is under warranty, shall either 1) provide at no charge replacement parts and/or labor (during the applicable parts and labor warranty periods specified above) to repair the defective components, provided that this repair is done by a BUNN Authorized Service Representative; or 2) shall replace the equipment or refund the purchase price for the equipment.

THE BUYER’S REMEDY AGAINST BUNN FOR THE BREACH OF ANY OBLIGATION ARISING OUT OF THE SALE OF THIS EQUIPMENT, WHETHER DERIVED FROM WARRANTY OR OTHERWISE, SHALL BE LIMITED, AT BUNN’S SOLE OPTION AS SPECIFIED HEREIN, TO REPAIR, REPLACEMENT OR REFUND.

In no event shall BUNN be liable for any other damage or loss, including, but not limited to, lost profits, lost sales, loss of use of equipment, claims of Buyer’s customers, cost of capital, cost of down time, cost of substitute equipment, facilities or services, or any other special, incidental or consequential damages.

CONTENTS

BUNN-O-MATIC COMMERCIAL PRODUCT WARRANTY 2
NORTH AMERICAN REQUIREMENTS 4
CE REQUIREMENTS 4
INTRODUCTION 5
SUPPORT 5
  BUNN SupportHub 5
USER NOTICES 5
INITIAL SETUP 6
PLUMBING REQUIREMENTS 6
NITROGEN GAS HOOK-UP 7
ELECTRICAL REQUIREMENTS 8
  Electrical Hook-up 8
PRODUCT CONCENTRATE REQUIREMENTS 8
  Plumbing Hook-up 8
INITIAL FILL 9
SETUP INSTRUCTIONS 10
  Place on Counter 10
  Installing Door 11
  Loading Product Containers 14
    Frozen Concentrates 14
    Ambient Concentrates (Optional) 14
  Installing Product Containers 15
  Installing Nozzles 16
  Priming 17
  Dispenser Operation 17
OPERATING CONTROLS 18
  Compressor Switch 18
  Product Dispense Tap Handles 18
  Dispense Lockout Switch 18
  Program Switch 18
CLEANING & SANITIZING INSTRUCTIONS 19
  Product Containers 19
PREVENTIVE MAINTENANCE 21
HOW TO DEACTIVATE NITROGEN INJECTION FOR STILL DISPENSING 22
ADJUSTMENT & OPTIONAL SETTINGS 24
  Water Flow Testing and Adjustment 24
  Pump Speed Adjustment 25
  Ratio Dispense Test Set Up Procedure 25
  Ratio Target 25
  Brix Dispense Test Set Up Procedure 26
  Foam Height Adjustment 26
  Dispenser Lockout 26
DECOMMISSION PROCEDURE 27
  Steps For Decommissioning 27
  Steps For Transportation 28
DISPENSER FAULT CODES 29
COOLANT SCHEMATIC DIAGRAM 31
SCHEMATIC WIRING DIAGRAM 32

Continued >

NORTH AMERICAN REQUIREMENTS

- This appliance must be installed in locations where it can be overseen by trained personnel.
- For proper operation, this appliance must be installed where the temperature is between 41°F to 90°F (5°C to 32°C).
- For proper operation, this appliance must be installed where humidity is 50%.
- Appliance shall not be tilted more than 10° for safe operation.
- An electrician must provide electrical service as specified in conformance with all local and national codes.
- This appliance must not be cleaned by pressure washer.
- This appliance can be used by persons if they have been given supervision or instruction concerning use of the appliance in a safe way and if they understand the hazards involved.
- Keep the appliance and its cord out of reach of children.
- Appliances can be used by persons with reduced physical, sensory or mental capabilities or lack of experience and knowledge if they have been given supervision or instruction concerning use of the appliance in a safe way and understand the hazards involved.
- If the power cord is ever damaged, it must be replaced by the manufacturer or authorized service personnel with a special cord available from the manufacturer or its authorized service personnel in order to avoid a hazard.
- Machine must not be immersed for cleaning.
- This appliance is intended for commercial use in applications such as:
  – staff kitchen areas in shops, offices and other working environments
  – by clients in hotel and motel lobbies and other similar types of environments
- Access to the service areas permitted by Authorized Service personnel only.

CE REQUIREMENTS

- This appliance must be installed in locations where it can be overseen by trained personnel.
- For proper operation, this appliance must be installed where the temperature is between 5°C to 35°C.
- Appliance shall not be tilted more than 10° for safe operation.
- An electrician must provide electrical service as specified in conformance with all local and national codes.
- This appliance must not be cleaned by water jet.
- This appliance is not intended for use by persons (including children) with reduced physical, sensory or mental capabilities, or lack of experience and knowledge, unless they have been given instructions concerning use of this appliance by a person responsible for its safety.
- This appliance is intended to be used for commercial applications, for example in kitchens of restaurants, canteens, hospitals and in commercial enterprises such as bakeries, butcheries, etc., but not for continuous mass production of food.
- Children should be supervised to ensure they do not play with the appliance.
- If the power cord is ever damaged, it must be replaced by the manufacturer or authorized service personnel with a special cord available from the manufacturer or its authorized service personnel in order to avoid a hazard.
- Machine must not be immersed for cleaning.
- Machine rated IX P1.

INTRODUCTION

The cold draft dispenser and door have been shipped in one complete package (the door is in its own package inside the larger box). To prevent damage, the door should remain in its individual packaging until it is ready for installation. This package also includes the drip tray and grate, and the tap handle bases for mounting onto the door of the dispenser.

SUPPORT

BUNN SupportHub®

BUNN SupportHub provides easy access to comprehensive information and resources tied to the specific serial number for this product.

Scan the QR code with any smart device for access to manuals, product information, training videos, service support and other related information.

SupportHub QR code is located on the inside of the front door



USER NOTICES

Carefully read and follow all notices on the equipment and in this manual. They were written for your protection. All notices are to be kept in good condition. Replace any unreadable or damaged labels.

CHARGE
Type R290, Amount 2.3 oz (66 gm)
Operation Pressures:
Propane (R-290)
High 255 psi (17.6 bar) (1.76 MPa)
Low 36 psi (2.5 bar) (0.25 MPa)
Maximum Pressures:
High 540 psi (37.2 bar) (3.72 MPa)
Low 120 psi (8.3 bar) (0.83 MPa)

33461.0019

⚠ WARNING

Moving Parts.	Risk Of Electrical Shock.
Do not operate unit with this panel removed.	Disconnect power before servicing unit.

27442.0000

⚠ DANGER

Risk of Fire or Explosion
Propane (R-290)
- Dispose of Properly in Accordance with Federal or Local Regulations.
- Flammable Refrigerant Used.

59202.0000

59419.0000

00824.0002

59205.0000

Maximum Water Level

59204.0000

MAX N2 PRESSURE
125 PSIG

41509.0009

⚠ WARNING

- **Use only on a properly protected circuit capable of the rated load.**
- **Electrically ground the chassis.**
- **Follow national/local electrical codes.**
- **Do not use near combustibles.**
- **Do not deform plug or cord.**

FAILURE TO COMPLY RISKS EQUIPMENT DAMAGE, FIRE OR SHOCK HAZARD.

READ THE ENTIRE OPERATING MANUAL BEFORE USING THIS PRODUCT

00986.0002

⚠ CAUTION

Risk of Fire or Explosion
Propane (R-290)
- Flammable Refrigerant Used.
- Dispose of Properly in Accordance with Federal or Local Regulations.

59203.0000

As directed in the International Plumbing Code of the International Code Council and the Food Code Manual of the Food and Drug Administration (FDA), this equipment must be installed with adequate backflow prevention to comply with federal, state and local codes. For models installed outside the U.S.A., you must comply with the applicable Plumbing /Sanitation Code for your area.

00656.0001

INITIAL SETUP

The dispenser dimensions fully assembled are 15.6"W x 29.5"D x 34.1"H. The dispenser is designed for indoor use only, in ambient temperatures ranging from 50°F to 90°F and 65% or below relative humidity environments. Avoid locating the machine where it will be subject to direct sunlight or exposed to other external heat sources. Install the dispenser on a counter that is able to support 150lbs (68 KG) of weight from the machine. Allow a minimum clearance of 6” at the back of the dispenser and 4" clearance on both sides for proper air circulation. Leave some space so the dispenser can be moved for cleaning. For optimum performance, **do not** let warm air from surrounding machines blow on the dispenser.



Level dispenser on countertop.

The legs can be adjusted by rotating them clock-wise or counter clock-wise. This can help level the dispenser if needed.



PLUMBING REQUIREMENTS

This dispenser must be connected to a FILTERED WATER source with operating pressure between 30 and 90 psi (0.207 and 0.621 mPa) dynamic. This water source must be capable of producing a minimum flow rate of 2 fluid ounces (88.7 milliliters) per second. A shut off valve should be installed in the line that will supply the dispenser. If installing a water filter, it should be installed as close as possible to the inlet of the machine, but downstream of the shut-off valve. The machine is supplied with a 3/8” (9.52 mm) male flare fitting.

NOTE: At least 18 inches (457 mm) of an FDA approved flexible beverage tubing, such as reinforced braided polyethylene, before the dispenser will facilitate movement to clean the counter top. BUNN-O-MATIC does not recommend the use of saddle valves to install the dispenser. The size and shape of the hole(s) made in the supply line(s) by saddle valves may restrict water flow.

If the water pressure is below 30 psi (dynamic) pressure, a booster pump (P/N 41815.1000) is required at the water line. When installing a water filter and a booster pump, install the water filter in between the booster pump and the machine.

As directed in the International Plumbing Code of the International Code Council and the Food Code Manual of the Food and Drug Administration (FDA), this equipment must be installed with adequate back flow prevention to comply with federal, state and local codes. For models installed outside the U.S.A., you must comply with the applicable Plumbing /Sanitation Code for your area.

NITROGEN GAS HOOK-UP

An N_2 high-pressure tank must also be available prior to installation (customer supplied). There must be sufficient space for the cylinder and should be properly secured with a stand or chain to comply with local safety codes.

The cold draft dispenser will need to be connected to an external Nitrogen (N_2) source. This will require an N_2 pressure regulator to be installed at the tank with a gas supply line to the dispenser. The external N_2 supply connection is a 1/4" MFL located on the back of the machine.

The cold draft dispenser may also need connected to a nitrogen generator. The supply pressure from the generator to the machine should be set to 120 psi.

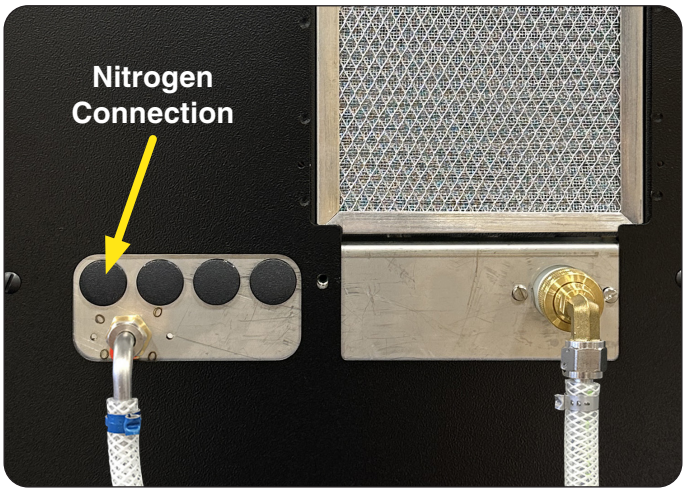

NOTE: If the customer is supplying their own regulator, the regulator should have a working pressure up to 130 psi. 6-feet of dedicated N_2 gas tubing line is required to connect the N_2 regulator to the machine. The gas tubing line must be rated at least 130 psi and requires a 1/4" FFL fitting at the end of the line to connect to the machine.

NOTE: For best drink consistency and nitrogen infusion, the nitrogen supply pressure to the machine should be set to 120 psi and maintain +/-10 psi from the 120 psi pressure set point.

NOTE: To ensure safe N_2 operation and compliance with local safety codes, the N_2 cylinder must be properly secured. A strap or chain should be used as a means of properly securing the cylinder.

NOTE: If installing a BUNN Nitron Gas Module (PN 55660.0008), see installation instructions that come with the unit.

NOTE: This dispenser is not designed to accept CO_2 gas.



Nitron Gas Module (NGM)

ELECTRICAL REQUIREMENTS

CAUTION: The dispenser must be disconnected from the power source until specified in Electrical Hook-Up.

The 120V rated dispensers have an attached cord set and require a 2-wire, grounded, individual branch circuit rated 120 volts AC, 15 amp, single phase, 60Hz. The receptacle must be within 6 feet of the machine. The mating connector is NEMA 5-15R. **Refer to the data plate for exact electrical requirements.**

Electrical Hook-up

CAUTION: Improper electrical installation will damage electronic components.

1. An electrician must provide electrical service as specified.
2. Using a voltmeter, check the voltage and color coding of each conductor at the electrical source.
3. Confirm that the refrigeration switch near the main control board is in the OFF position.
4. If plumbing is to be hooked up later, be sure the dispenser is disconnected from the power source. If plumbing has been hooked up, the dispenser is ready for Initial Fill.
5. Connect the dispenser to the power source.
6. Press Dispense Switch inside door at the top to ON.
7. Close dispenser door.



PRODUCT CONCENTRATE REQUIREMENTS

The dispenser works with a range of concentrates. Typical ratio capability is 4:1 to 12:1.

NOTE: Some concentrates may have different ratio capacities in the dispenser.

NOTE: If the product is packaged in jugs, we recommend you pour the concentrate into our refillable ball-valve containers (P/N 39302.0000).

Plumbing Hook-up

The water connection is located on the rear of the dispenser. A 3/8" (9.52 mm) male flare adapter fitting is supplied, installed on the rear of the dispenser.

NOTE: Water pipe connections and fixtures directly connected to a potable water supply shall be sized, installed and maintained in accordance with federal, state and local codes.

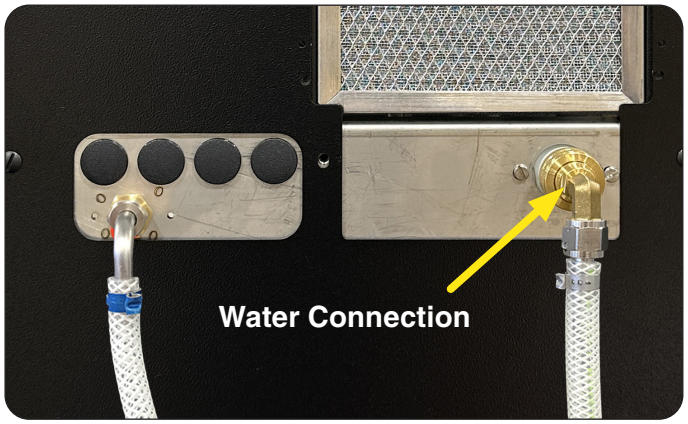

Continued >

INITIAL FILL

CAUTION: The dispenser must be disconnected from the power source throughout the initial fill except when specified in the instructions.

1. Remove Drip Tray assembly and Splash Panel from the dispenser.

2. Replace the Drip Tray.

3. Connect the water source to the back of the dispenser (see Plumbing Hook-up).

4. Connect dispenser to the power source.

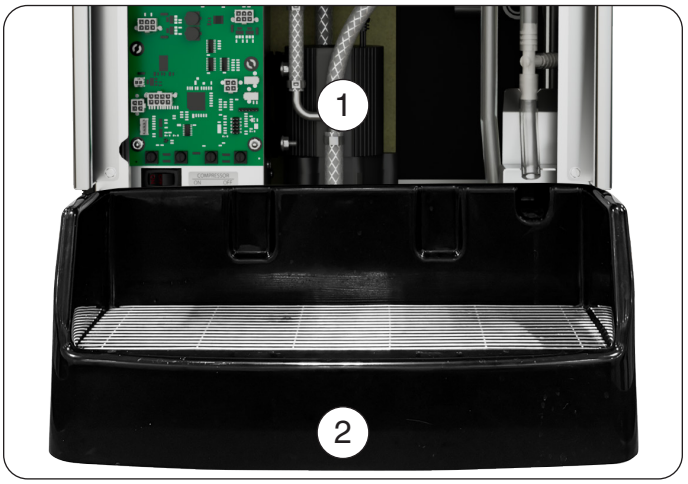

5. The dispenser is equipped with an automatic bath fill circuit. When water is supplied and power is applied, the water will automatically fill if Dispense switch is ON and Program switch is OFF.

   NOTE: It is okay to turn ON the Compressor switch as soon as the bath starts filling.

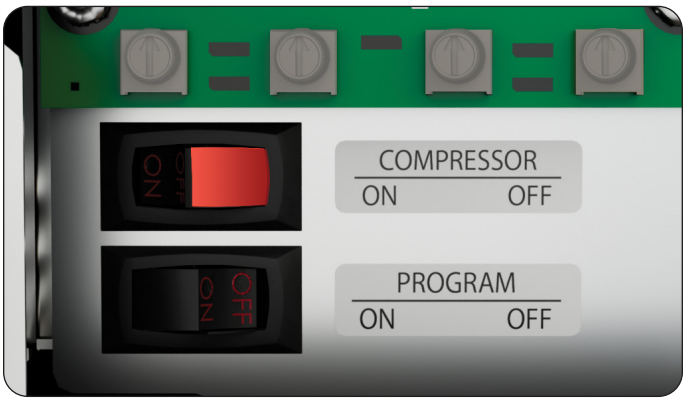

6. Press Dispense Switch inside door at the top to ON.



7. Replace the splash panel and drip tray.

   NOTE: It will take several hours to create the ice bank required for full dispenser performance.

   - During this time, some further trickling from the water bath is expected due to expansion caused by ice bank formation.
   - While the refrigeration system is creating the ice bank, the dispenser can be readied for use.



SETUP INSTRUCTIONS

Place on Counter

1. **CAUTION**: The dispenser is very heavy! Use care when lifting or moving it. Use at least two people to lift or move the dispenser. Place dispenser on a sturdy counter or shelf able to support at least 150 lbs. (68 kg).

   This dispenser is designed for indoor use only.

   Set the dispenser on the counter where it will be used. This dispenser requires a minimum of 6 inches (102 mm) of air clearance at the rear and 4 inches (203 mm) of air clearance on sides of the dispenser.

   For optimum performance, do not let warm air from surrounding machines blow on the dispenser. Leave some space so the dispenser can be moved for cleaning.



2. After connecting to a filtered water source (see PLUMBING REQUIREMENTS), turn on the water supply to the dispenser.

3. Connect the Nitrogen source to the dispenser (see NITROGEN GAS HOOK-UP).



4. Turn on the Nitrogen supply.

   NOTE: For best drink consistency and nitrogen infusion, the nitrogen supply pressure to the machine should be set to 125 psi and maintain +/- 10 psig from the 125 psi pressure set point.

   - Verify that the regulator's output gauge reads 125 psig.
   - If the regulator has a shut-off valve, move the regulator's valve handle to the open position (the handle should be parallel to the gas supply line).

Continued >

continued from previous page

Installing Door

1. Install Handle Body Bracket using the 4 provided Hex Washer Screws.

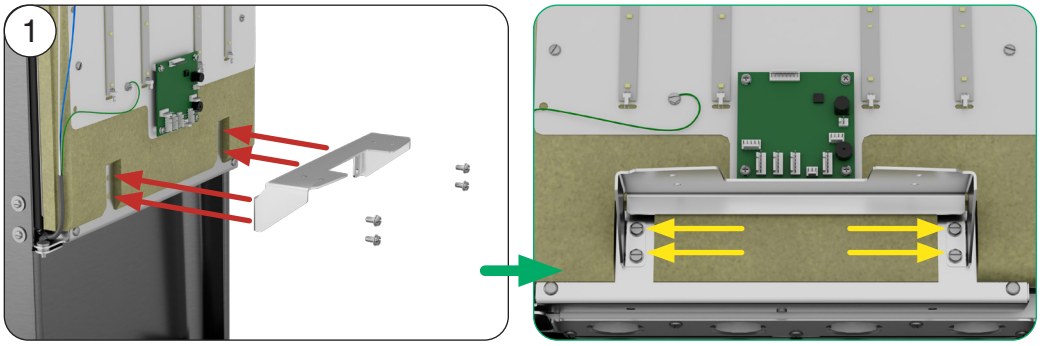

2. The control board comes with the Handle Body Wire Harnesses already connected.

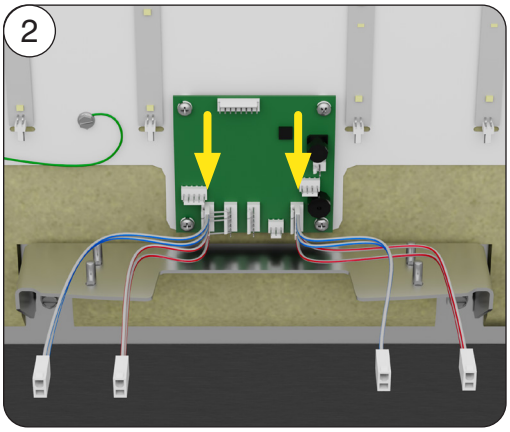

3. Connect the LED lighting wire harness from the door cover to the control board.

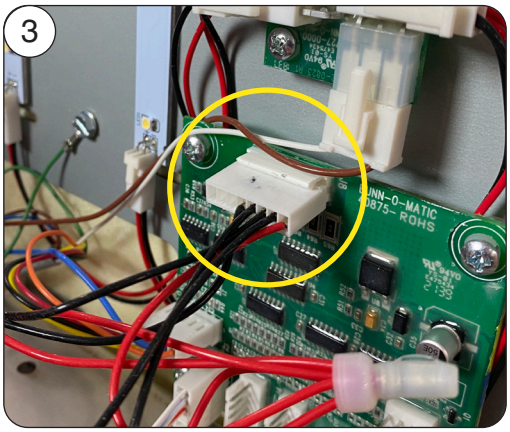

4. Remove the Door Cover from packaging and attach it using the 5 provided Slotted Black Screws.

   2 in the top, 1 on the right side and 2 under the base.

   NOTE: Make sure wires and cables are not crimped or pinched when installing the door.

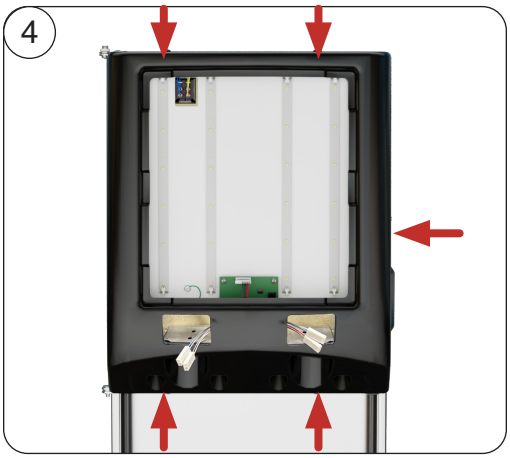

Continued >

SETUP INSTRUCTIONS

continued from previous page

5. Connect wiring from Handle Bodies to wire harneses through left and right openings in door.

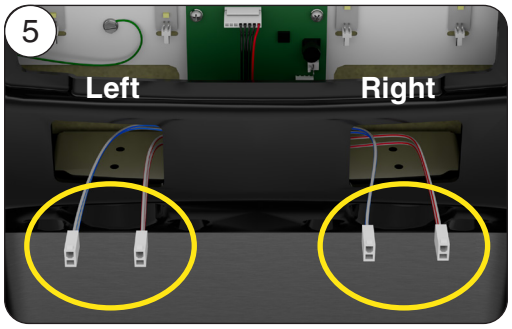

6. **Left Side Handle Body**

   a. Connect top switch on the body to the RED/WHITE wire for the Right handle.

   b. Connect bottom switch on the body to the BLUE/WHITE wire for the Left handle.

   Right Side Handle Body

   Repeat steps **a** and **b** on the right side to connect the Right Handle Body.

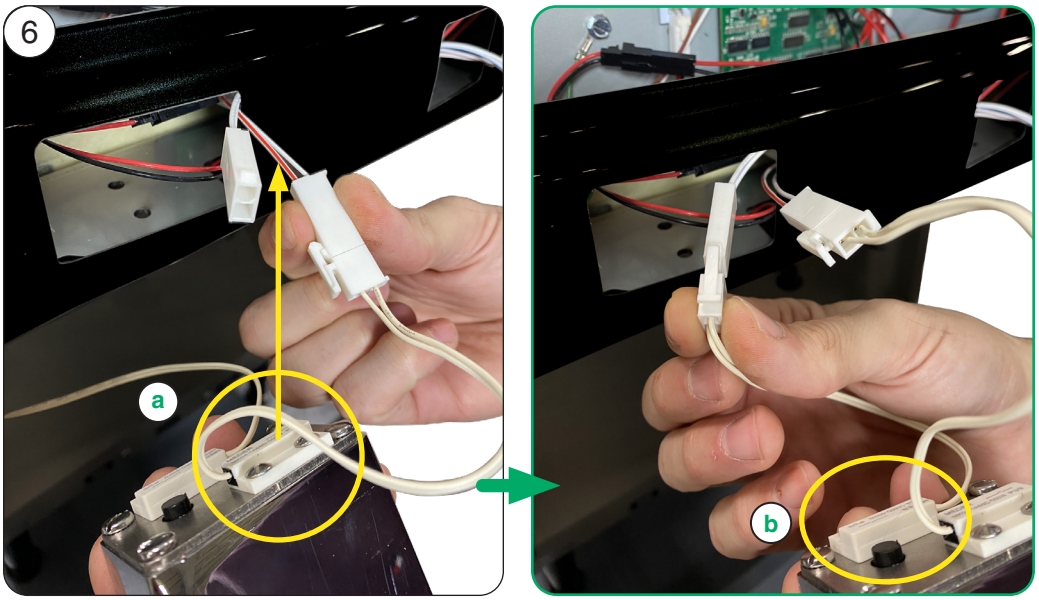

NOTE: This is the view from back of handle body to show correct connection for wires.

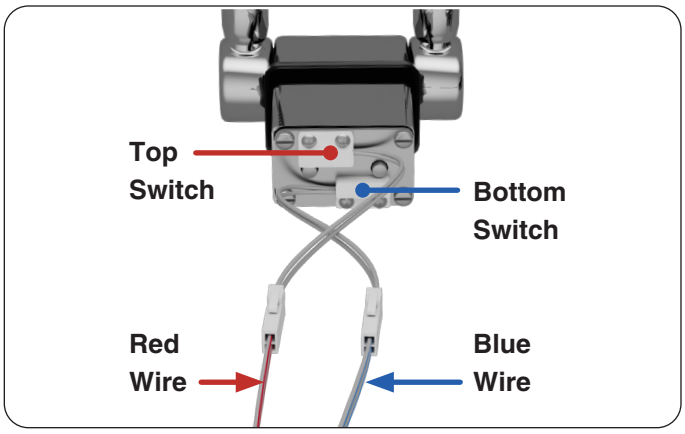

7. Place Handle Bodies in door.

   Insert and push back the left Handle Body until the black Handle Gasket is flush with the door.

   Repeat on right Handle Body.

   NOTE: Be careful while pressing the base against the wiring behind the door.

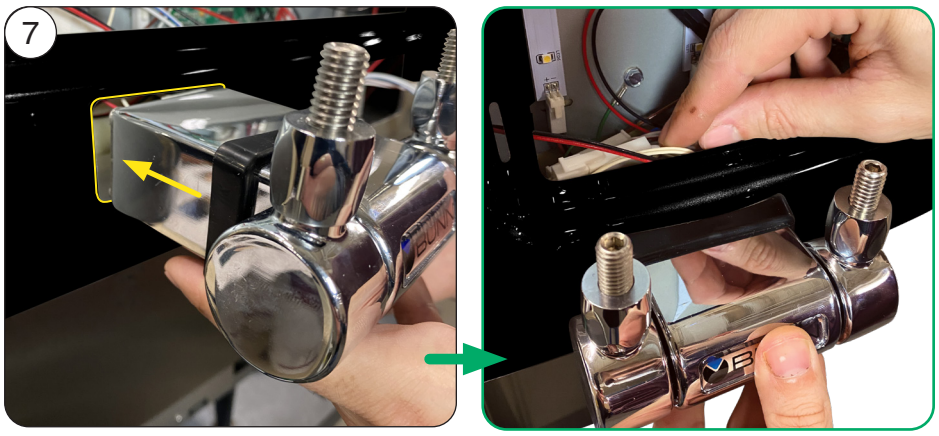

Continued >

SETUP INSTRUCTIONS

continued from previous page

8. Repeat steps to install right Handle Body into opening on right side of door.

   NOTE: Both Handle Bodies should align with the door at an angle when finished.

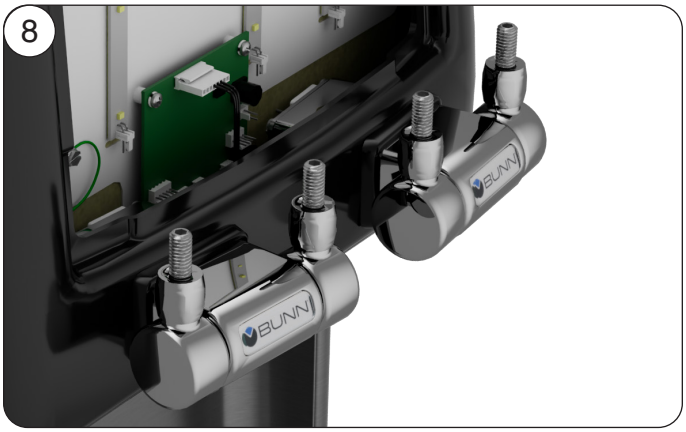

9. Locate the mounting holes under the Tap Handles through the circular openings and use the 4 provided Hex Washer Screws to tighten the Handle Bodies to the Handle Bracket.

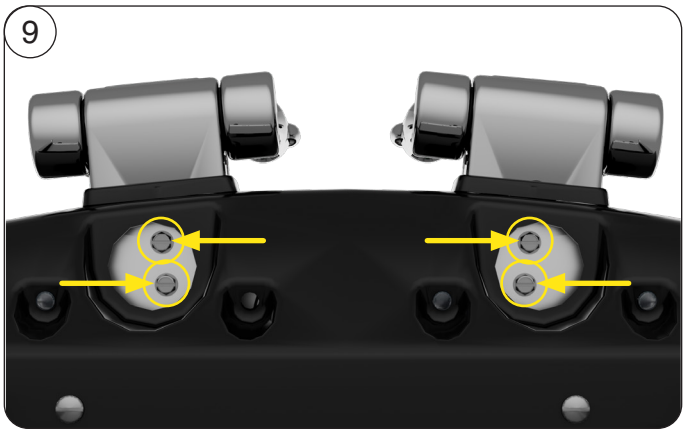

10. Install the provided Black Plugs to cover the screws under the Handle Body.





11. Install Door Display by inserting the 3 tabs on the sides of the display into the 3 slots on both edges of the door.

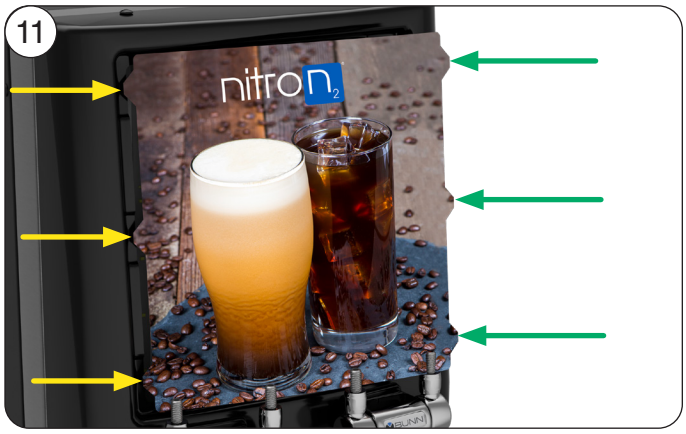

Continued >

SETUP INSTRUCTIONS

continued from previous page

12. Install all 4 Handles on the threads of the Handle Bodies.



NOTE: Use the Jam Nuts at the base of the handles to tighten in the opposite direction so that the handles will face forward.



NOTE: The default setup is for the decals on the handles to say NITRO, NITRO (left side), COLD BREW, COLD BREW (right side).



Left **Right**

Loading Product Containers

FROZEN CONCENTRATES

NOTE: Loading frozen concentrate in the product cabinet may cause damage to the machine. This damage is not covered by warranty.

1. Thoroughly mix the thawed concentrate by vigorously shaking the product container.
2. Open the dispenser door.
3. Prior to placing the product container in the dispenser, make sure that the o-ring on the container adapter is lubricated. This will ease removal of the container when it becomes necessary.
4. Place the product container in the desired position and press it firmly into the bottle adapter opening.
5. Open the vent hole in the product container. (If required).

   NOTE: Concentrate in the container must be completely thawed and be within the temperature range of 35-40 degrees F (1.6-4.4 degrees C.) Product outside of this temperature range, especially below, may produce an “out of ratio” drink.

AMBIENT CONCENTRATES (OPTIONAL)

1. Install an Ambient Concentrate Conversion Kit (BUNN part number 33699.0002) per the instructions provided in the kit.
2. Attach the concentrate product hose to the appropriate concentrate line located at the rear of the dispenser.
3. Attach the other end of the product hose to the product container through an appropriate fitting.

   NOTE: Although the dispenser is designed to accept ambient concentrates, the Nitro Coffee cascade performance may be reduced due to ambient product mixing with the cold nitrogenated water.

Continued >

Installing Product Containers

(Sold Separately)

1. Load product container into one of four dispenser stations.

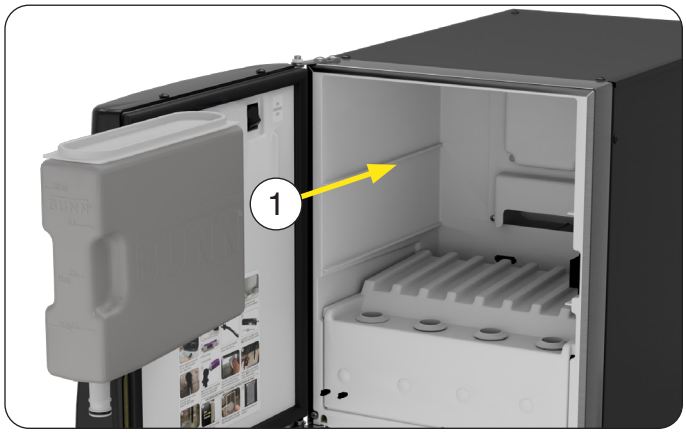

2. Press product container nozzle down firmly into station.

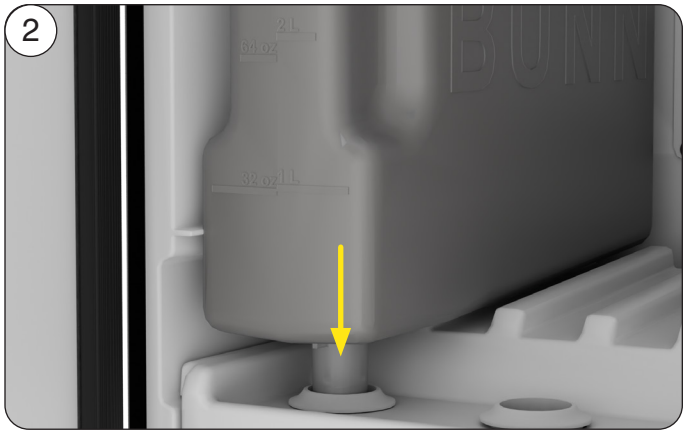

3. Repeat installation for all 4 beverage containers.

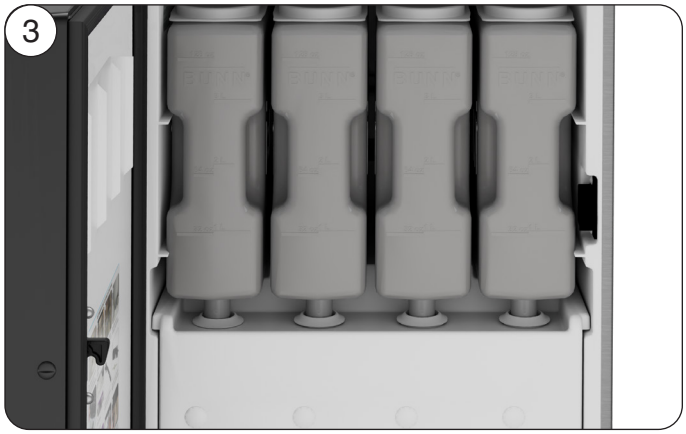

4. Press Dispense Switch inside door at the top to ON.



5. Close dispenser door.

Continued >

SETUP INSTRUCTIONS

Installing Nozzles

1. 4 nozzles are provided along with 2 Nitro Stout Inserts for the 2 nozzles that go under the Nitro Tap Handles on the left side.

Nitro Stout Inserts





2. Place Nitro Stout Insert into 2 of the nozzles.

   NOTE: The Insert will go in at a slight angle.

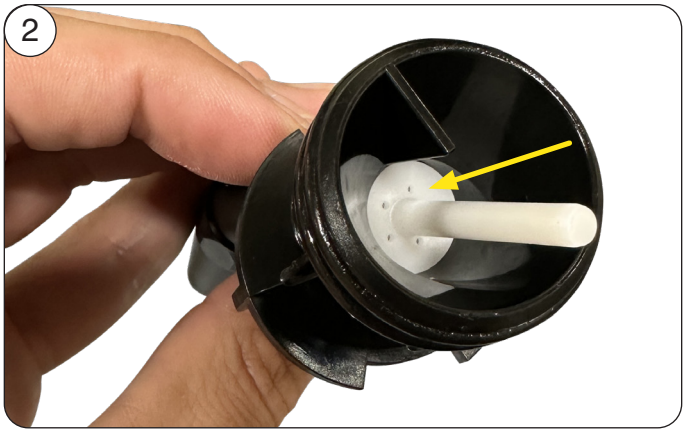

   NOTE: Each Dispense Nozzle has two O-rings at the top that will need lubrication.

   NOTE: A tube of lubricant is provided in packaging.

3. Spread a light layer of lubricant on the O-ring for each Dispense Nozzle.



4. Place the 2 nozzles with Nitro Stout Inserts in the left outlets.

   NOTE: Start the nozzle facing sideways when pushing up into an outlet.

5. Twist nozzle till it faces forward and locks in place.

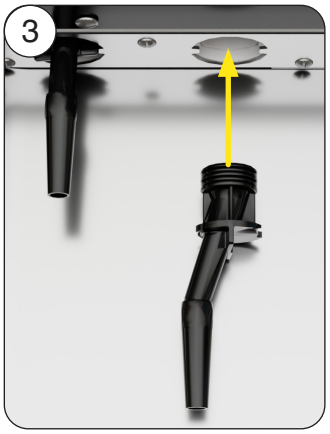

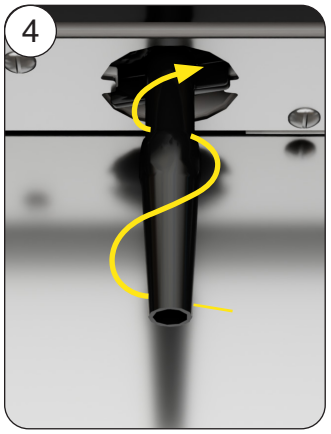

Continued >

continued from previous page

Nitro Side with Nitro Decals on Tap Handles and Nitro Stout Inserts in nozzles.



Priming

1. Place a large container under the appropriate dispense nozzle.

2. Pull and hold the tap handle, until concentrate dispenses from the dispense nozzle.

   NOTE: This may take several seconds, depending on the installation and set pump speed.





Dispenser Operation

Pull and Hold Dispensing:

1. Place a cup on the drip tray beneath the desired dispensing nozzle.

2. Pull and hold the Tap Handle until the beverage reaches the desired level, then release.



OPERATING CONTROLS

Compressor Switch

The refrigeration switch is located on the Electrical Panel of the dispenser near the Circuit Board. This switch controls power to the relay contacts for the compressor and condenser fan motor.

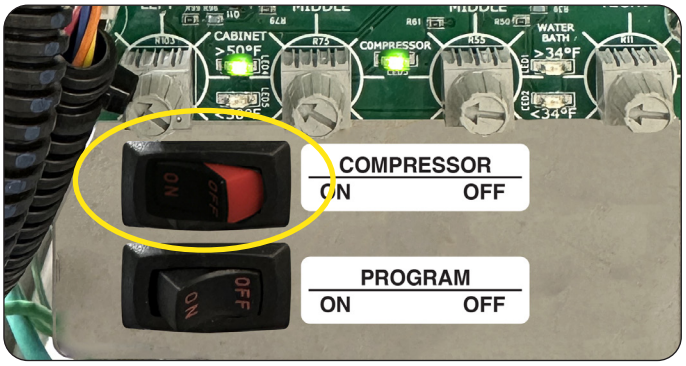

Refrigeration Switch

Product Dispense Tap Handles

Pulling and holding tap handle will initiate product flow from the respective nozzle; releasing the tap handle will stop the flow.



Product Dispense Handles

Dispense Lockout Switch

This switch is located inside the door at the top. It is used to switch the Dispensing function ON and OFF. It is also used for fill procedures.



Dispense Lockout Switch

Program Switch

This switch is located near the main control board next to the refrigeration switch.

It is used in various setup processes.

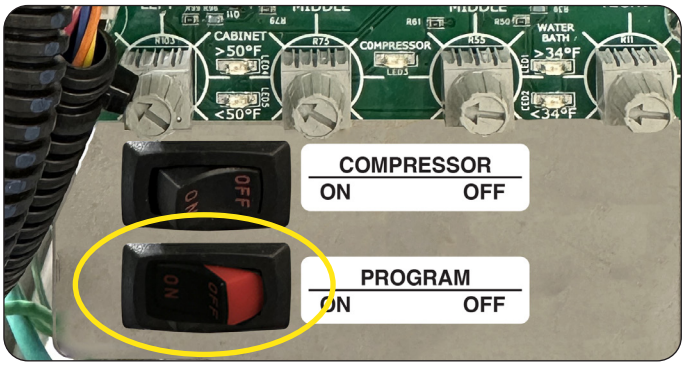

Program Switch

CLEANING & SANITIZING INSTRUCTIONS

Product Containers

DAILY: RINSE PROCEDURE

Tools required: 32 oz. (946 ml) minimum empty container.

1. Open dispenser door. Lift up on product containers and remove them from the machine.
2. Wipe down the internal compartment of the cabinet and the concentrate container's inlet adapter(s) area.
3. Close the door, place an empty container under the dispensing nozzle(s).
4. Dispense from each station until clear water flows from the dispense nozzle(s).
5. Open dispenser door and reconnect all product containers.

DAILY: PARTS WASHING

1. Remove and wash the dispense nozzle(s), Nitro Stout Insert, drip tray and drip tray cover in a mild detergent solution. Rinse thoroughly. Use brush (00674.0000) to clean inside and o-ring area on dispense nozzles.
2. Remove Nitro Stout Insert in nitro nozzle for cleaning. Replace before reinstalling nozzle.
3. Wipe splash panel, areas around dispense nozzle(s), and refrigerated compartment with a clean, damp cloth.
4. Use brush and a mild detergent solution to clean inside dispense area where dispense nozzles are removed. Rinse and wipe thoroughly.

SANITIZE PROCESS

Tools required: 1 empty 5-gallon (18.9 L) bucket, sanitizer (options in list below), and clean, empty concentrate container(s).

1. Remove all concentrate from the dispenser and store in a separate refrigerated compartment.
2. Fill clean empty concentrate container(s) with approximately 32 oz (946 ml) of warm tap water at minimum 80˚F (26.6˚C). Load the containers of warm water into the dispenser.
3. Place an empty container under the dispense nozzles.
4. Dispense at each station until the stream out of the nozzles runs clear (about 30 seconds).
   NOTE: The dispenser will not allow all dispense stations to run at the same time.
5. Once this is completed, remove the containers and empty.
6. Remove each dispense nozzle and Nitro Stout insert. Run under hot tap water to remove excess product build-up.
7. Prepare 2.5 gal. (9.46 L) of sanitizing solution (list of options below).
8. Place nozzles in a separate container of sanitizing solution and mix thoroughly. Allow the parts to soak for 2 minutes.
9. Clean the dispense nozzle receptacle (dispense valves) with sanitizing solution and a soft bristle brush.
10. Clean the concentrate containers inlet adapters with the sanitizing solution and a soft bristle brush. Discard all remaining sanitizing solution.
11. Place the nozzles back in their dispense stations making sure to place the Nitro Stout insert in the Left dispense nozzle (both nozzles on a dual Nitro model).
12. Fill approximately 128 ounces (3.8 L) of sanitizing solution (See Sanitizer Product Options list) into clean, empty concentrate containers. Do not re-use sanitizing solution from earlier steps. Load the containers into the dispenser.
13. Place the empty 5-gallon bucket under the dispense nozzles.
14. Dispense sanitizing solution through each station for 1 minute. Allow to soak for 5 minutes. Dispense from each station for 2 minutes.

Continued >

CLEANING & SANITIZING INSTRUCTIONS

continued from previous page

NOTE: The machine only allows dispensing at one station at a time. Alternate stations are required for these steps.

15. When the above cycle is complete, remove the sanitizing solution and replace with concentrate.
16. Activate a dispense at each station until product appears. Dispense 1 – 12 ounce (354.9 ml) glass of finished product and discard.
17. Wipe internal and external surfaces with a clean damp cloth.

SANITIZER PRODUCT OPTIONS:

- Chlorine sanitizers - 1 packet of Kay-5 sanitizer (or equivalent active ingredients) into 2.5 gallons. (9.46 L) of minimum 80˚F (26.6˚C) water to ensure 100 PPM chlorine.
- Quat = Mix Quat and minimum 80˚F (26.6˚C) water per manufacturers recommendation to achieve a minimum 400 PPM Quat.

WEEKLY: CLEAN AIR FILTER AND CONDENSER COILS

1. Locate the removable Air Filter on the back of machine to clean in warm soapy water.

   NOTE: To remove Air Filter:

   a. Slide filter up to clear the 2 corners in the panel.

   b. Tilt the bottom of the filter out and then slide down to remove.

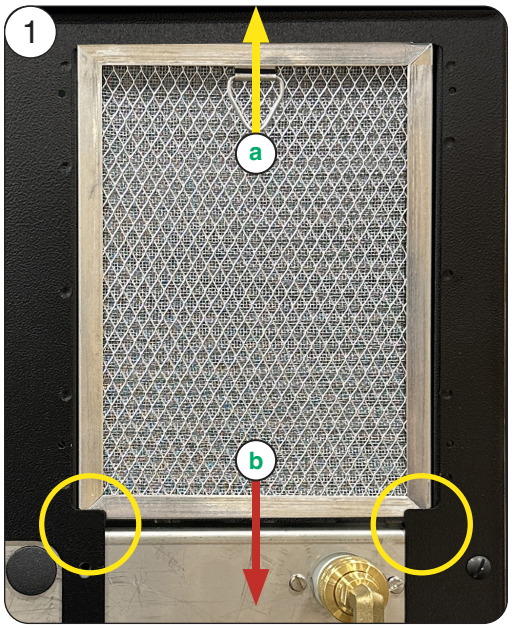

Air Filter

2. Use a soft bristle brush to clean the build-up of dirt in the Condenser Coils.



Condenser Coils

Continued >

PREVENTIVE MAINTENANCE

ANNUALLY: PUMP TUBING

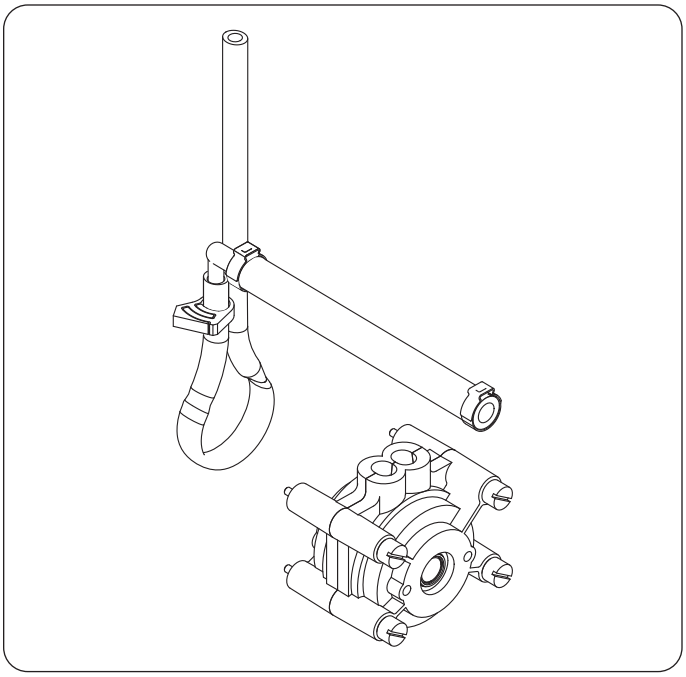

Pump Tubing

1. Open dispenser door.
2. Remove all product containers and place them in a refrigerated (35-40 degrees F [1.6-4.4 degrees C]) environment. Disconnect all connections to ambient products from the bottle adapter.
3. Rinse all dispense stations using steps outlined in “DAILY RINSE PROCEDURE”.
4. Disconnect dispenser from power source.
5. Turn OFF N_2 Regulator or BUNN NGM.
6. Remove the dispense platform cover.
7. Disconnect the dispense platform water line(s) from the supply line inside the refrigerated cabinet and disconnect the wiring connection(s) from the cabinet receptacle(s) and the N_2 line.
8. Remove the mounting screw(s) securing the dispense platform(s) and Platform Restraint Bracket to the cabinet .
9. Pull the dispense platform(s) completely out of the cabinet and place it on a flat work surface.
10. Close the dispenser door.
11. Remove the 4 screws securing the pump head.
12. Gently pull the pump head apart.
13. Gently pull the pump tube from around the pump’s rotor.
14. Release the clamps securing the old pump tubing to the plastic elbows.
15. Pull the plastic elbows from the old pump tubing, and discard the old pump tubing.
16. Insert the plastic elbows into the new pump tubing and secure it with the clamps.

    NOTE: Obtain new parts using the Illustrated Parts Catalog listed at www.bunn.com.
17. Gently wrap the new pump tubing around the pump’s rotor.
18. Reassemble the pump housing onto the platform assembly.
19. Repeat steps 10 through 17 for the remaining pump(s).
20. Replace the dispense platform(s) (N_2 Line, Platform Restraint Bracket and screws.) into the refrigerated cabinet, making sure to reconnect all electrical and water connections .
21. Replace the dispense platform cover.
22. Turn power on to dispenser.
23. Install containers of rinse water, run each station and check for leaks. Repair leaks as necessary.
24. Replace product shelf and product containers. Reconnect any connections to ambient product containers.
25. Prime the pumps as described in “PRIMING” in the Initial Fill Section.

HOW TO DEACTIVATE NITROGEN INJECTION FOR STILL DISPENSING

The Nitro dispense stations can be converted to Still Cold Draft dispensing (no nitrogen injection).

1. Open the cabinet door on the dispenser.
2. Remove product caddy(s) from the cabinet and place in a refrigerator.
3. Loosen the shelf from the cabinet by lifting up.
4. Remove the shelf from the cabinet.



5. To deactive only the station 2nd from the left (#2); locate the Nitro Injection 3-way valve.

   With the lever in the down position, station #2 is set for Nitrogen Injection.

6. To deactivate Nitrogen Injection to station #2, flip the lever up.

Nitro Injection 3-Way Valve with Nitrogen Injection Deactivated

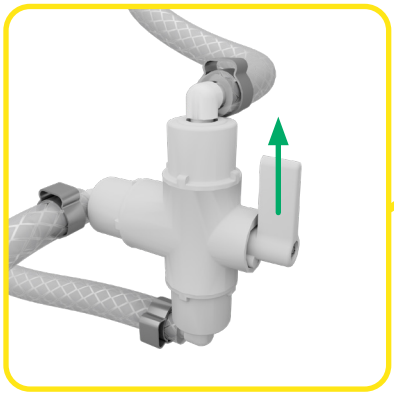

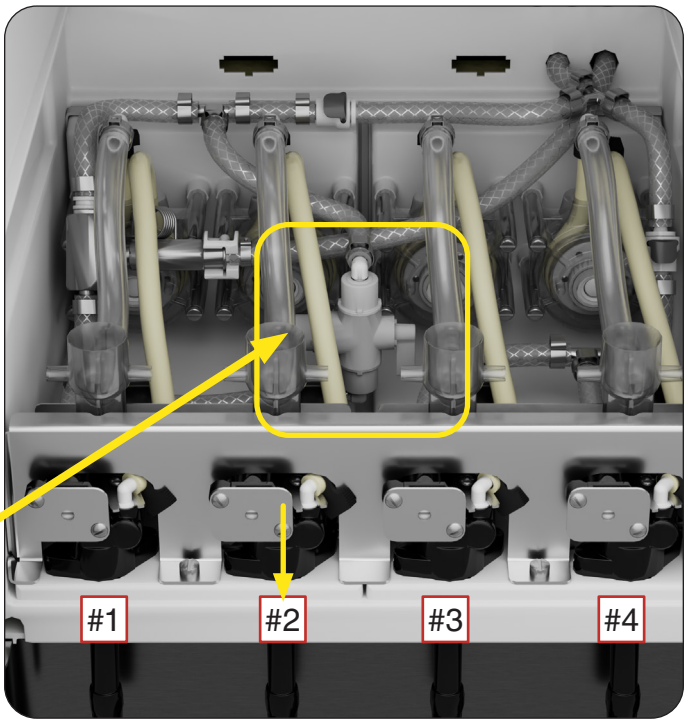

7. To deactivate all stations (including #1), disconnect gas line to machine.

   NOTE: This is the only way to deactivate station #1.

8. Reinstall shelf.

9. Place caddy(s) back into the cabinet.

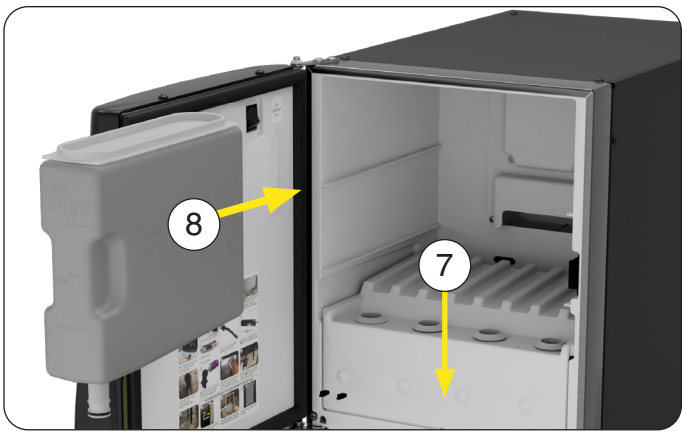

Continued >

HOW TO DEACTIVATE NITROGEN INJECTION FOR STILL DISPENSING

continued from previous page

NOTE: If a station is deactived and changed to still, the Nitro Stout Insert in the nozzle will need to be removed.

Removing Nozzle(s):

1. Turn the nozzle counter-clockwise and pull down.

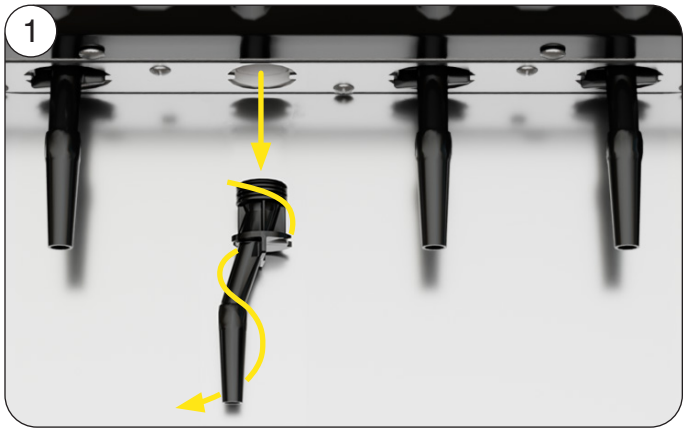

2. Locate the Nitro Stout Insert in the nozzle and remove.

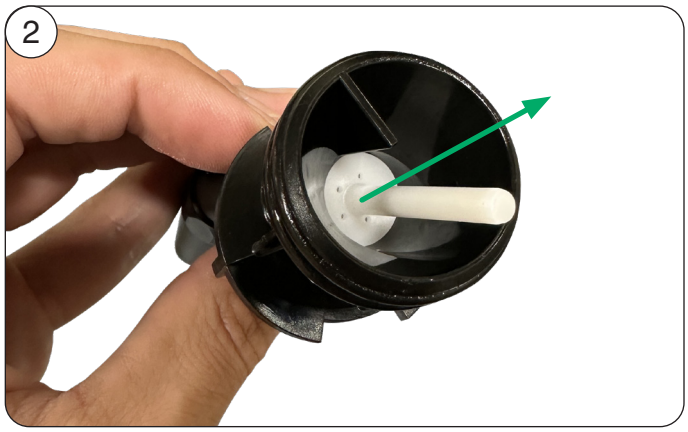

3. Reinstall nozzle in dispense station by pushing and turning clockwise.

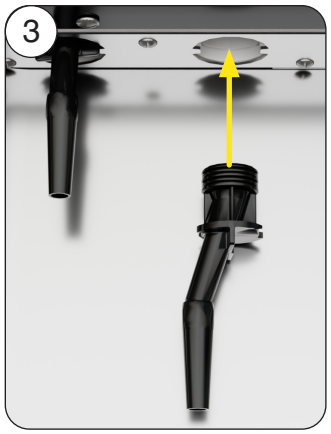

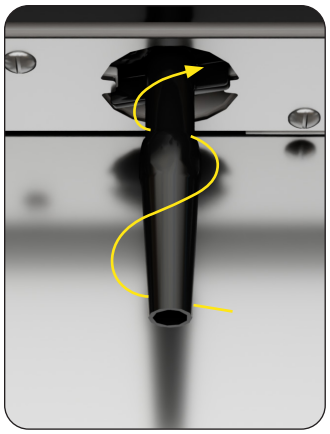

4. The water flow rate will need to be adjusted.

   Refer to "Water Flow Testing and Adjustment" section for setting the water flow rate for non-nitrogen injection.



Continued >

ADJUSTMENT & OPTIONAL SETTINGS

Water Flow Testing and Adjustment (Non-Nitrogen Injection Side Only)

The water pressure regulator is set at the factory. In the event, replacing or adjusting a water pressure regulator in a Nitro/Still Cold Draft Countertop Dispenser, the water pressure regulator may need to be adjusted first to the suggested Nitro water flow rate dispense target of 133 ml (4.5 oz) per 3 seconds dispense time before adjusting the water flow rate on the Still dispense valve.

NOTE: Purge all dispense stations to remove air from water line before making initial adjustments.

1. Ready the dispenser by removing the right side panel to access the water pressure regulator.
2. Place a graduated measuring cup or the large chamber of the empty brixing cup (BUNN part number 33095.0000) under the Nitro dispense stations.
3. Place the Program switch in the ON position.
4. Pull and release the desired tap handle three times.
5. The selected position will dispense water (no concentrate) only for 3 seconds.
6. Measure the water dispensed. Suggested target is 133 ml (4.5 oz) per 3 seconds flow rate.
7. Pull on the knob to unlock and rotate the knob in minor increments (clockwise; more) to adjust the Nitro water flow rate. Perform 3 second Nitro water flow rate dispense test and record water volume.
8. Repeat steps 2 through 7 as necessary until the correct Nitro flow rate target (volume -133ml / 4.5oz) is achieved. Once the flow rate is set, re-lock the water pressure regulator by pushing the knob back into lock position.
9. Check all Nitro stations.
10. Next, place graduated measuring cup under the Still dispense stations.
11. Pull and release the desired tap handle three times.
12. The selected position will dispense water (no concentrate) only for 3 seconds.
13. Measure the water dispensed. Suggested target is 133 ml (4.5 oz) per 3 seconds flow rate.
14. Adjust the water flow rate on the Still dispense valves.

    NOTE: Counterclockwise to increase flow rate; clockwise to decrease flow rate.
15. Repeat steps 9 through 13 as necessary until the correct water flow rate target (volume - 133ml/4.5oz) is achieved.
16. Check all Still stations.
17. Place the Program switch back into the OFF position.
18. Once target flow rates are set, refer to Pump Speed Adjustment and Ratio Target Setup sections for adjusting pump speeds to the target ratio.

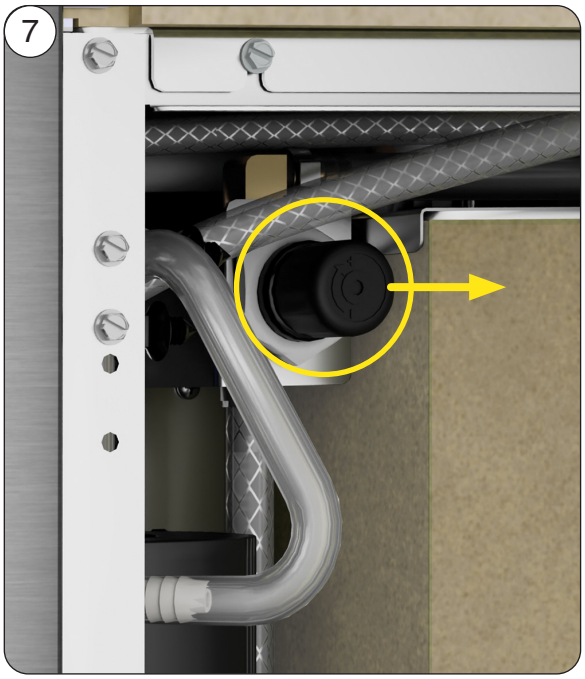

- **Pull Knob to Unlock Water Pressure Regulator**
- **Rotate Knob for Adjustment**

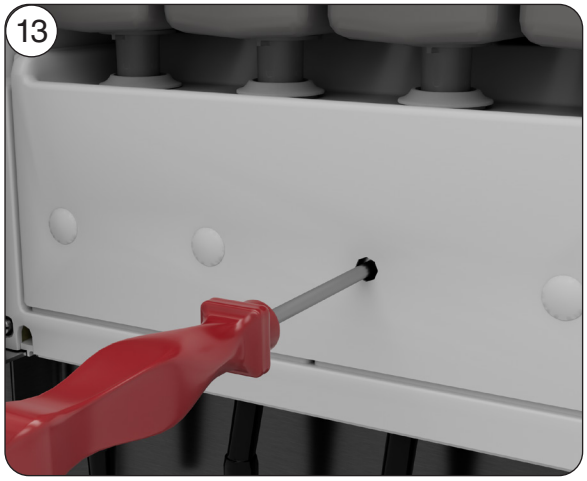

Adjusting Water Flow Using Flat Blade Screwdriver

Continued >

ADJUSTMENT & OPTIONAL SETTINGS

continued from previous page

Pump Speed Adjustment

1. Disconnect the dispenser from the power source.
2. Remove the drip tray.
3. Remove the two screws securing the splash panel and remove the splash panel
4. Locate the adjustment knobs on the circuit board.

   NOTE: Start with the adjustment dial in the nine o'clock position.
5. Turn the adjustment knobs clockwise to increase speed and counterclockwise to decrease speed.

   NOTE: Adjustment knobs corelate to dispense stations left to right.
6. Reinstall the splash panel and drip tray and reconnect the dispenser to the power source.

Ratio Dispense Test Set Up Procedure

1. Place the Program switch in the ON position.
2. Water flow rate should be factory pre-set to 133 ml (4.5 oz) per 3 second dispense. To verify, place a graduated measuring cylinder under the dispense nozzle, pull and release the tap handle 3 times. The dispenser will then dispense an amount of water for 3 seconds. Record the water output for later reference on each dispense head.
3. Pull and release the tap handle 6 times. The dispenser will then dispense an amount of concentrate for 3 seconds.
   - For best results, discard the first two samples before recording output. Repeat the same practice after every adjustment.
4. Record the amount dispensed.

   NOTE: Measuring in milliliters is required for accuracy.
5. Refer to the Ratio chart below to confirm proper volumes for desired ratios. Concentrate amounts for each ratio are highlighted in yellow under the ratio number.
6. To increase or decrease the product output, refer to Step 10 of Setup Instructions.
7. Place the Program switch back to the OFF position.

Ratio Target

3 second water dispense in milliliters

	4+1	5+1	6+1	7+1	8+1	9+1	10+1	11+1	12+1	13+1
127	31.8	25.4	21.2	18.1	15.9	14.1	12.7	11.5	10.6	9.8
130	32.5	26.0	21.7	18.6	16.3	14.4	13.0	11.8	10.8	10.0
133	33.3	26.6	22.2	19.0	16.6	14.8	13.3	12.1	11.1	10.2
136	34.0	27.2	22.7	19.4	17.0	15.1	13.6	12.4	11.3	10.5
139	34.8	27.8	23.2	19.9	17.4	15.4	13.9	12.6	11.6	10.7

Continued >

ADJUSTMENT & OPTIONAL SETTINGS

continued from previous page

Brix Dispense Test Set Up Procedure

1. Load the concentrate in the dispense station. Dispense until the finished drink is flowing from the dispense nozzle.
2. Dispense a typical cup size and discard.
3. Dispense another sample and measure the Brix using a refractometer. Best practice is to allow samples dispensed with nitrogen to settle before taking a measurement.
   - Follow the operation instructions for the refractometer being used.
   - Many refractometers include a thermometer on board and will help indicate that the sample is at room temperature and ready to be tested. (See refractometer manual for more details on usage.)
4. To increase or decrease the product output, refer to Step 10 of SET-UP INSTRUCTIONS.
5. Continue making pump speed adjustments and measuring samples until desired Brix target is reached.

Foam Height Adjustment

If you are not getting any foam, please ensure that your primary N_2 gas supply is properly connected and turned on. Internal adjustable N_2 gas pressure regulator can be adjusted to deliver a different foam height on a dispensed cold draft beverage.

1. After product loading and priming procedures have been performed, dispense a full drink and observe foam height after the surge is finished.
2. Remove right side panel and locate adjustment knob of gas regulator.
3. Pull knob out to unlock and allow adjustment.
4. For more foam, turn knob clockwise no more than 1/4 turn. For less foam, turn knob counterclockwise no more than 1/4 turn.
5. Dispense another full drink and observe change in the foam height.
6. If foam is still not at the desirable height, go back to Step 4.
7. When desired foam height is achieved, push in regulator knob to lock it in place and reinstall side panel.

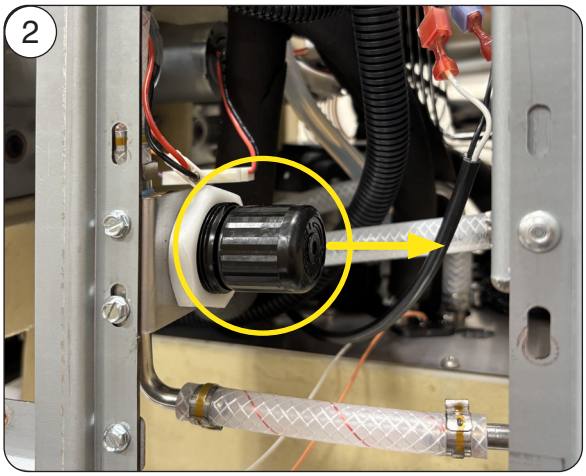

Adjustment knob of gas regulator

Dispenser Lockout

Dispense functions of the dispenser can be turned-off to prevent unauthorized use of the dispenser, while keeping the refrigeration system running.

1. Locate the Dispense Lockout switch inside the door at the top of the dispenser.
2. Place the switch in the OFF position to prevent dispensing.
3. Place the switch in the ON position to allow dispensing.

   NOTE: This switch will operate the door lights on models equipped with this feature, actuates water bath auto fill, and reset all faults.

   NOTE: Switching OFF then ON will reset all faults.



Continued >

DECOMMISSION PROCEDURE

When planning on removing and transporting a dispenser from the field, a few steps must be taken to ensure equipment cleanliness, safety of the equipment and service personnel. The dispenser will have an approximate 8lb. ice bank that will need to melted prior to removal. This usually requires the dispenser to be unplugged from electricity for 48 hours prior to removal date allowing the 8lb. ice block to fully melt within the water bath.

The Nitrogen cylinder is under extremely high vapor pressure which will need to be handled with care during disconnect from the dispenser. The Nitrogen cylinders will have a DOT label identifying the gas and hazards.

Steps For Decommissioning

(48 Hours Before Transportation)

HOW TO DEACTIVATE NITROGEN INJECTION

Step 1: Remove the product containers from the dispenser cabinet and store away in a refrigerated environment if you plan on using again.

Step 2: Locate the N_2 supply cylinder and verify it only supplies nitrogen to the BUNN Nitron$_2$ Cold Draft dispenser. Turn the gas supply to the OFF position. Place an empty container under the dispense nozzles. Pull a "Nitro Coffee" tap handle to relieve the pressure. Disconnect the nitrogen supply line to the dispenser and cap the dispenser nitrogen inlet fitting.

Step 3: Next, disconnect the nitrogen pressure regulator from the cylinder. Pack the tubing and regulator for transport. Inform the location manager or owner that the Nitrogen cylinder is disconnected and should be properly stored until gas supplier can pick up.

NOTE: During removal, if the cylinder is empty, tag the cylinder as "Empty".

Step 4: Perform the dispenser cleaning/sanitizing procedure as instructed in the Nitron$_2$ Cold Draft Installation & Operating Guide.

NOTE: By performing the cleaning/sanitize procedure prior to dispenser removal will reduce the amount of time, labor and parts in reconditioning the dispenser to get it ready for the next placement out in the field.

Step 5: There will be an approximate 8 lb. ice block inside the water bath that will take 48 hours to melt. Locate the dispenser compressor On/Off switch behind the lower splash panel, toggle the switch to the Off position. Proping the door open will help melt the ice bank.

Step 6: Turn Off the main water supply to the dispenser. Pull a tap handle to relieve pressure in the water line. Disconnect the water source to the dispenser and cap off the water source & dispenser fitting for extra protection.

Step 7: Place sign on dispenser. (Decommission In-Process, Return On _____ For Pick Up).

Continued >

DECOMMISSION PROCEDURE

continued from previous page

Steps For Transportation

Step 1: Return to location with a helper to assist with removal of dispenser from the current location.

NOTE: Helper is only needed if service technician does not have the necessary equipment to lift, move and secure a 130lb dispenser safely.

Step 2: Now that the ice block is melted, you will need to drain the water bath before removing and packing the dispenser for transport. The water bath will have approximately 2-1/2 to 3-gallons of water. Remove the lower splash panel to access the sight gauge tube (photo 1). Pull the sight tube down and position in knock-out (photo 2) to drain the water bath from the tank into an empty 5-gallon bucket. As an alternative option, you can disconnect the sight tube from the "T" barbed fitting (increase flow) and hold the drain tube down (photo 3) to drain the water into an empty 5-gallon bucket.

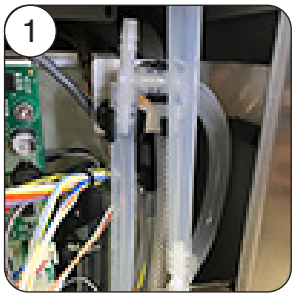



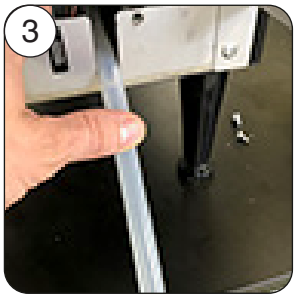

Step 3: Once water has stopped draining from the drain tube, reconnect the "T" barbed fitting on the sight tube and position it back to its original position (photo 1). Reinstall the lower splash panel and prepare the machine for loading. Secure the dispenser in an upright position in the transport vehicle.

DISPENSER FAULT CODES

NOTE: All LED flashing sequences include a 3-second delay between flash codes.

1. 3 flashes of the circuit board mounted bath LED's and 1 flash of the door mounted blue LED's.

   • Bath Sensor Open

   Possible Cause(s):
   - Bath sensor not connected to the main board.
   - Bath sensor failed.

2. 4 flashes of the circuit board mounted bath LED's and 2 flashes of the door mounted blue LED's.

   • Bath Sensor Shorted

   Possible Cause(s):
   - Bath sensor failed.
   - Shorted bath sensor wires.

3. 5 flashes of the circuit board mounted cabinet LED's and 3 flashes of the door mounted blue LED's.

   • Cabinet Sensor Open

   Possible Cause:
   - Cabinet sensor not connected to the main board.

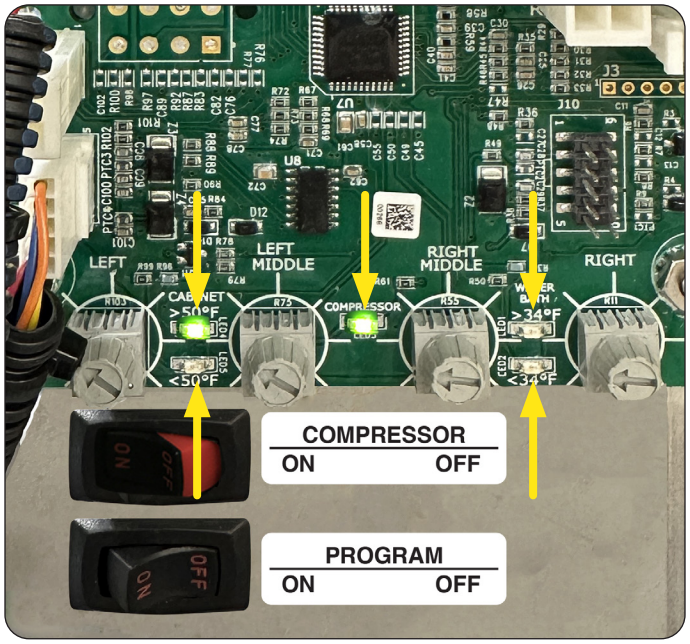

Fault Code LEDs

4. 6 flashes of the circuit board mounted cabinet LED's and 3 flashes of the door mounted blue LED's.

   • Cabinet Sensor Shorted

   Possible Cause:
   - Cabinet sensor not connected to the main board.

5. Circuit board mounted cabinet LED's will flash slowly. 1 flash of the door mounted blue LED's.

   • Cabinet > 50 degrees for 4 hours.

   This fault will stop all dispense functions.

   Possible Cause(s):
   - Cabinet fan not running.
   - Water bath pump not running.
   - Check compressor/WB pump switch to confirm it is ON.
   - Water bath is low.

   Troubleshoot by powering the dispenser down and back up to reset the fault.

Continued >

DISPENSER FAULT CODES

continued from previous page

NOTE: Flashes of the door mounted LED's (dispense stations number left to right).

6. 7 flashes = Station 1.

   8 flashes = Station 2.

   9 flashes = Station 3.

   10 flashes = Station 4.

   • Concentrate Pump Stalled

   This fault will reset itself after 5 seconds.

   Possible Cause:
   - Peristaltic pump failed or stalled.

7. 2 flashes of the door mounted LED's if the bath has not reached proper level after 4 minutes.

   • Refill Fault Dispenser will not allow additional bath filling until this fault is reset.

   Possible Cause(s):
   - Water line to machine turned off.
   - Water not connected to dispenser.
   - Water flow/pressure source too low.
   - Bath fill valve failed.

   Troubleshoot by flipping Dispense Switch OFF, then ON to reset the fault.

   Bath will start filling 30 seconds after power-up.

COOLANT SCHEMATIC DIAGRAM

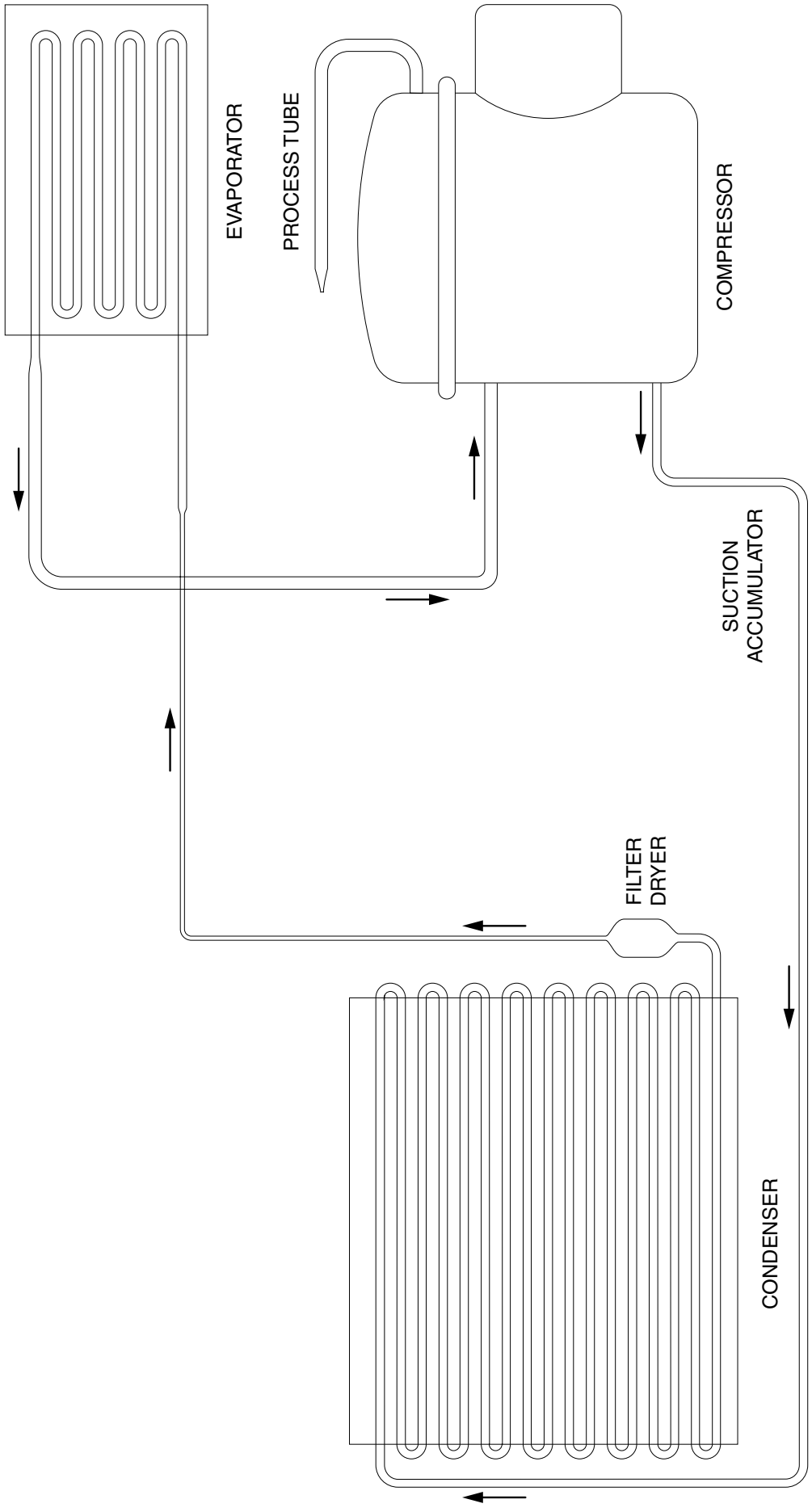

SCHEMATIC WIRING DIAGRAM

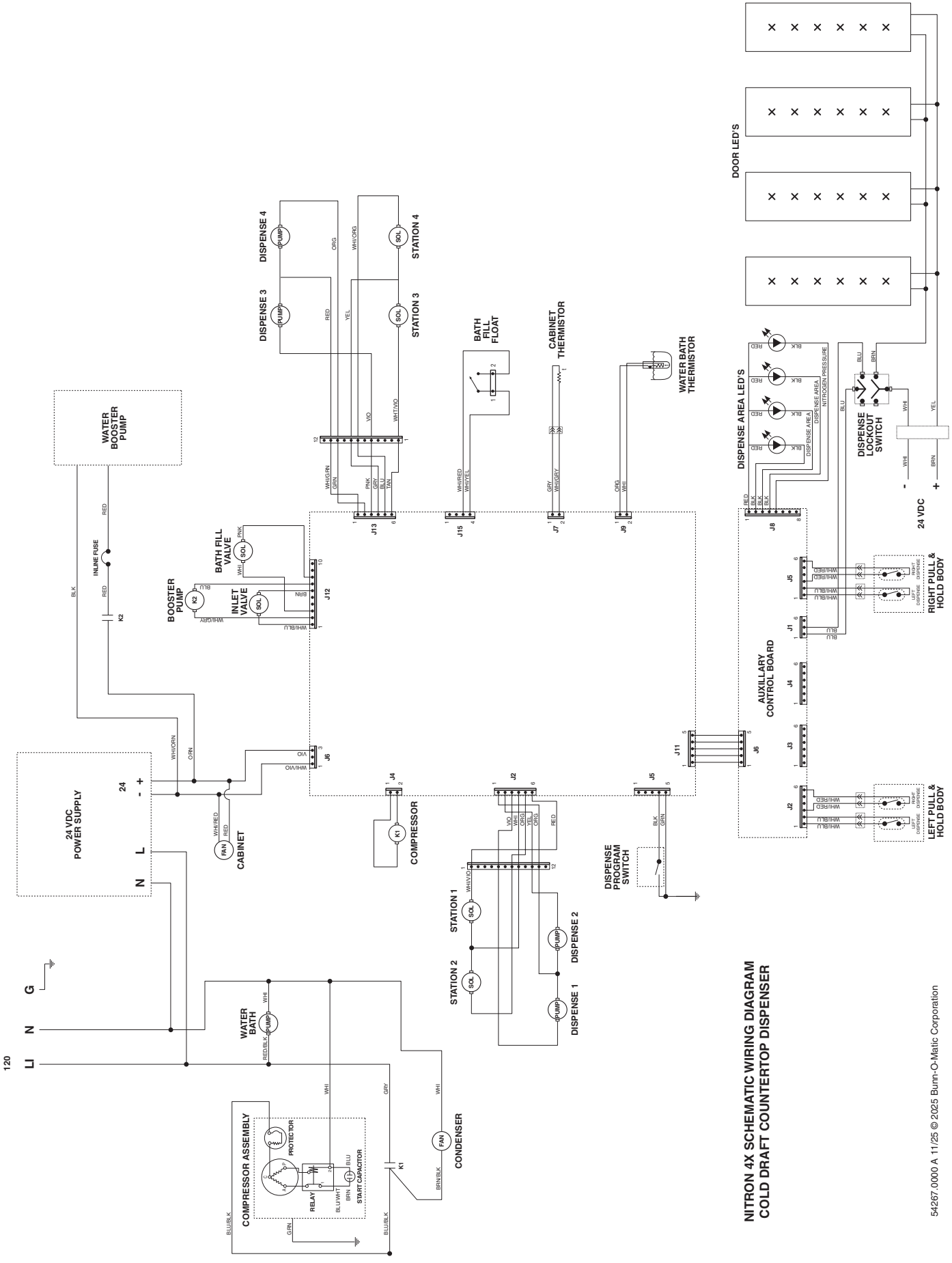

NITRON 4X SCHEMATIC WIRING DIAGRAM
COLD DRAFT COUNTERTOP DISPENSER

54267.0000 A 11/25 © 2025 Bunn-O-Matic Corporation