NITRON® 4X

Cold Brew and Nitro Coffeee Dispenser



SERVICE & REPAIR MANUAL

BUNN-O-MATIC CORPORATION

POST OFFICE BOX 3227
SPRINGFIELD, ILLINOIS 62708-3227
PHONE: (217) 529-6601 FAX: (217) 529-6644
www.bunn.com

To ensure you have the latest revision of the Operating Manual, or to view the Illustrated Parts Catalog, Programming Manual, or Service Manual, please visit the Bunn-O-Matic website, at www.bunn.com. This is absolutely FREE, and the quickest way to obtain the latest catalog and manual updates. For Technical Service, contact Bunn-O-Matic Corporation at 1-800-286-6070.

59429.0000 A 1/26 ©2026 Bunn-O-Matic Corporation

BUNN-O-MATIC COMMERCIAL PRODUCT WARRANTY

Warranty statements and information can be found on our website. Please visit https://commercial.bunn.com/support/warranty-lookup for further details.

INDEX

Introduction
Recommended Daily Cleaning Instructions
Annual Preventive Maintenance
Troubleshooting
Access Panels 18
Dispense Platform Removal 19
Facts About Hydrocarbon Refrigerant R-290 20
Overview: Refrigeration Group 23
Compressor 27
Start Capacitor 28
Overload Protector 29
Start Current Relay 30
Cabinet Fan 31
Compressor Switch 32
Condenser Fan 33
Control Board (Main) 34
Auxiliary Control Board 35
Circulation Pump 36
Dispense Switch 37
Dispense Pump 38
Dispense Motor 39
Dispense Valve 40
Dispense Handles 41
LED Lamps 42
Compressor Relay 43
Water Pump Relay 44
Inlet Solenoid 45
Water Tank Solenoid 46
Water Tank Float Switch 47
Temperature Probe (Water Bath Thermistor) 48
Temperature Sensor 49
Transformer 50
Water Pump Booster 51
Water Pressure Regulator 52
Nitrogenator Assembly 53
Nitrogen Regulator 54
Nitro Stout Insert 55
Circuit Board Triac Map 56
Schematic Wiring Diagrams 57

INTRODUCTION

SAFETY FIRST!

To avoid electrical shock, unplug dispenser from power source before servicing inside.

USER NOTICES

All notices on this equipment are written for your protection. All notices are to be kept in good condition. Replace any unreadable or damaged labels.

SITE PREPARATION

A minimal clearance is required between the dispenser sides and the wall or another appliances. For optimum performance, **do not** allow warm air from surrounding machines blow on the dispenser. Leave some space so the dispenser can be moved for cleaning.

ROUTINE INSPECTION:

When performing Daily-Weekly Cleaning procedures, inspect o-rings, seals, and bushings for signs of wear or damage and replace immediately.

RECOMMENDED DAILY CLEANING INSTRUCTIONS

The use of a damp cloth rinsed in any mild, non-abrasive, liquid detergent is recommended for cleaning all surfaces on Bunn-O-Matic equipment. Do **NOT** clean this equipment with a water jet device.

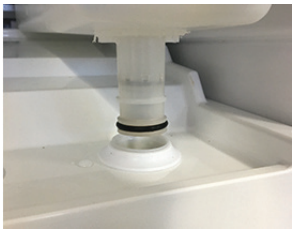

1. Open dispenser door. Lift up on product containers to disconnect them from the machine inlet.

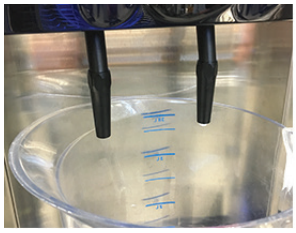

2. Close door, place an empty container under the dispense nozzles.

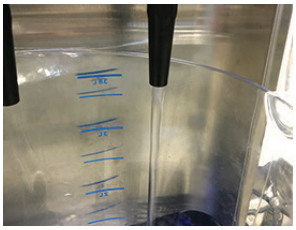

2. Dispense from each station until clear water flows from the dispense nozzle.

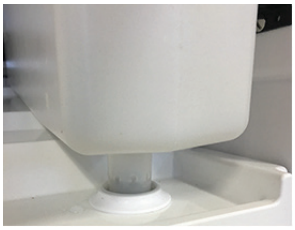

4. Open dispenser door and reconnect all product containers.



5. Remove dispenser nozzles and drip tray. Wash all parts in warm soapy water.



Brush Storage



6. Use brush to clean through dispense nozzles.



7. Use brush to clean nitro insert.



8. Use brush to clean nozzle connection ports on machine. BUNN Part No. 49827.0000.



9. Apply small amount of food grade lubricant to o-ring on nozzles. BUNN Part No. M2550.0001.



10. With a warm soapy cloth, wipe down interior of cabinet and splash panel area behind dispensing nozzles.

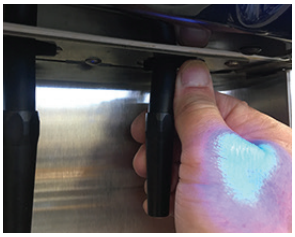

11. Replace drip tray and dispense nozzles. Be sure to install nitro nozzle in left dispense station.

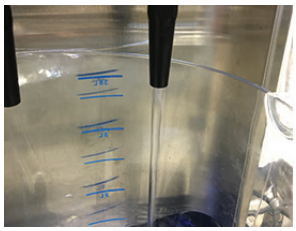

12. Dispense from each station until finished product flows from the dispense nozzles.

Recommended Weekly Cleaning

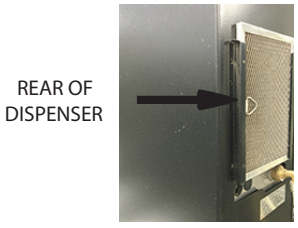

13. Remove Air Filter from outside rear panel of dispenser.

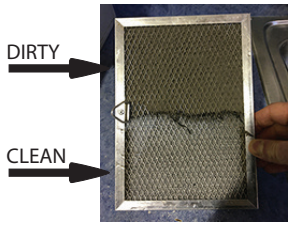

14. Wash Filter using warm soapy water, rinse using water flow from faucet. Shake out excess water then re-install on rear panel of dispenser.

ANNUAL PREVENTIVE MAINTENANCE:

Reference the Illustrated Parts Catalog, Operating Manual, please visit the Bunn-O-Matic website, at www.bunn.com for the latest/current part numbers and/or information. In order to maintain proper machine operation, a Preventative Maintenance schedule must be performed on a regular basis.

ANNUALLY: PUMP TUBING

1. Open dispenser door.
2. Remove all product containers and place them in a refrigerated (35-40 degrees F [1.6-4.4 degrees C]) environment.
3. Disconnect all connections to ambient products from the bottle adapter.
4. Rinse all dispense stations using steps outlined in “DAILY RINSE PROCEDURE”.
5. Disconnect dispenser from power source.
6. Turn OFF N2 Regulator or BUNN NGM.
7. Remove the dispense platform cover.
8. Disconnect the dispense platform water line(s) from the supply line inside the refrigerated cabinet and disconnect the wiring connection(s) from the cabinet receptacle(s) and the N2 line.
9. Remove the mounting screw(s) securing the dispense platform(s) and Platform Restraint Bracket to the cabinet .
10. Pull the dispense platform(s) completely out of the cabinet and place it on a flat work surface.
11. Close the dispenser door.
12. Remove the 4 screws securing the pump head.
13. Gently pull the pump head apart.
14. Gently pull the pump tube from around the pump’s rotor.
15. Release the clamps securing the old pump tubing to the plastic elbows.
16. Pull the plastic elbows from the old pump tubing, and discard the old pump tubing.

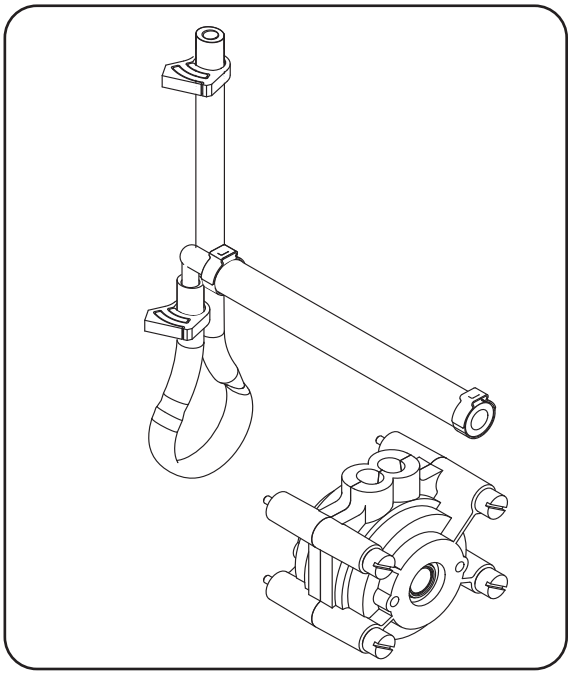

Pump Tubing

17. Insert the plastic elbows into the new pump tubing and secure it with the clamps.

NOTE: Obtain new parts using the Illustrated Parts Catalog listed at www.bunn.com.

18. Gently wrap the new pump tubing around the pump’s rotor.
19. Reassemble the pump housing onto the platform assembly.
20. Repeat steps 10 through 17 for the remaining pump(s).
21. Replace the dispense platform(s) (N2 Line, Platform Restraint Bracket and screws.) into the refrigerated cabinet, making sure to reconnect all electrical and water connections .
22. Replace the dispense platform cover.
23. Turn power on to dispenser.
24. Install containers of rinse water, run each station and check for leaks. Repair leaks as necessary.
25. Replace product shelf and product containers. Reconnect any connections to ambient product containers.
26. Prime the pumps as described in “PRIMING” in the Initial Fill Section.

TROUBLESHOOTING

A troubleshooting guide is provided to suggest probable causes and remedies for the most likely problems encountered. If the problem remains after exhausting the troubleshooting steps, contact the Bunn-O-Matic Technical Service Department.

- Inspection, testing, and repair of electrical equipment should be performed only by qualified service personnel.
- All electronic components have 120-240 volt ac and low voltage dc potential on their terminals. Shorting of terminals or the application of external voltages may result in board failure.
- Intermittent operation of electronic circuit boards is unlikely. Board failure will normally be permanent. If an intermittent condition is encountered, the cause will likely be a switch contact or a loose connection at a terminal or crimp.
- Solenoid removal requires interrupting the water supply to the valve. Damage may result if solenoids are energized for more than ten minutes without a supply of water.
- The use of two wrenches is recommended whenever plumbing fittings are tightened or loosened. This will help to avoid twists and kinks in the tubing.
- Make certain that all plumbing connections are sealed and electrical connections tight and isolated.

WARNING –
- Exercise extreme caution when servicing electrical equipment.
- Unplug the dispenser when servicing, except when electrical tests are specified.
- Follow recommended service procedures.
- Replace all protective shields or safety notices.

PROBLEM	PROBABLE CAUSE	REMEDY
Cold Water Circulation Dispense stations not working. **Note:** Cooling failure or excessive cabinet temperatures for more than 4 hours will result in dispense lockout or no dispense. **Note:** Reset fault/timer by unplugging unit.	1. Cabinet cooling fan.	Replace fan (24vdc). Note: Fan receives power when the dispenser is powered.
	2. Bath recirculation pump.	A) Check for 120V or 230V AC at pump. Replace pump.
	3. Restricted water flow to cabinet water coil and bath.	Check for kinked hose.
Dispense nozzle dripping/won't stop dispensing.	1. Product residue causing O-ring on dispense nozzle to lose vacuum.	A) Remove dispense nozzles and stout insert. Clean nozzles and O-ring in mild detergent solution. B) Use soft bristle brush and mild detergent solution to clean dispense valve area that dispense nozzles are seated.

TROUBLESHOOTING (cont.)

PROBLEM	PROBABLE CAUSE	REMEDY
Refrigeration Dispense stations not working. **Note:** Cooling failure or excessive bath and cabinet temperatures for more than 4 hours will result in dispense lockout or no dispense.	1. Compressor ON/OFF switch.	Check for "ON" position or no continuity - replace switch.
	2. Dirty condenser filter or fins.	Clean filter and fins or replace condenser filter.
	3. Condenser fan not running.	A) Check for 120V or 230V AC. Replace fan motor or check fan blades for obstructions. B) Check compressor LED on circuit board. If ON, relay coil should have power (24VDC).
	4. Compressor relay not activating.	Check compressor relay coil for 24VDC. NOTE: Always check power with coil attached. If compressor LED is ON and no 24VDC - replace board. If yes, 24VDC - replace relay. Note: Relay contacts are normally open.
	5. Compressor not running.	Check compressor thermal overload (N/C). If open check for dirty condenser filter or adequate ventilation and space around machine.
	6. Compressor running and not cooling.	Check refrigeration system for leaks and proper charge.
	7. Low water bath or bath fill valve failed.	Check Dispense switch is set to ON and sight gauge shows full water bath. If sight gauge is low, press Dispense switch to OFF. Wait a few seconds. Press Dispense switch to ON. Bath will automatically start filling water bath after 30 seconds.

TROUBLESHOOTING (cont.)

PROBLEM	PROBABLE CAUSE	REMEDY
Dispenser Locked Out Dispense stations not working.	1. Check Dispense On/Off Switch	(A) Set switch to ON position. (B) Check switch and harness for proper continuity.
Cooling system failure.	1. Refrigeration or cold water recirculation system.	Check all previous items that pertain to refrigeration or cold water recirculation
Dispense station not working	1. Dispense On/Off Switch set to OFF position.	Place switch in ON position.
	2. Dispense switch failed	Check switch and harness for proper continuity.
All stations dispense concentrate only	Main water supply	Check for ON position.
	Frozen bath	A) Compressor relay/contacts shorted - replace relay. B) Recirculating pump.
	Inlet water valve failed	A) Check for 24VDC power when dispensing. If yes, replace valve. If no, check harness for proper continuity. Then replace circuit board if needed.

TROUBLESHOOTING (Continued)

PROBLEM	PROBABLE CAUSE	REMEDY
Dispense station **Concentrate only**	Water solenoid	Replace solenoid (24vdc) or check wire connection between water valve and main control board.
Dispense station **water only**	Concentrate out	Replace refill concentrate container or BIB
	Product pump not pumping	Check for proper counterclockwise rotation of pump rollers. If counter-clockwise, replace pump tubing. If clockwise, wire connection to pump is reversed. Switch wires on terminals.
	Pump not turning	A) Check speed setting on circuit board and increase speed (turn clockwise) B) Check for DC power to pump motor. If yes, replace motor assy. If no, check harness for proper continuity. Then replace circuit board if needed.

TROUBLESHOOTING (cont.)

PROBLEM	PROBABLE CAUSE	REMEDY
Water leak filling drip tray or around dispense deck area	1. Initial fill/setup	Some expansion normal. May fill drip tray during initial ice block formation
	2. Dispense deck	Inspect or replace fittings clamps, o-rings, solenoids and quick disconnect fittings. **NOTE:** Dispense deck area slopes to drain tube that leads to the drip tray.
	3. Water pressure greater than 100psi	Install water pressure regulator and reduce to 50 psi.
Water leaking beneath machine	1. Bath tank overflow.	A) Check all internal water connections. B) Check internal plumbing connections. C) Check bath float switch D) Check bath overflow tubes for proper position.
	2. Condensation from cabinet cooling coil.	Check for routing of condensation tube to water bath.

TROUBLESHOOTING (cont.)

PROBLEM	PROBABLE CAUSE	REMEDY
Unit is not working	1. Power Supply	Check for 24VDC. If no 24VDC reading, replace power supply.
	2. Main control board.	If 24VDC present and no LED's lit, replace control board.
Difficulty brixing and/or weak beverage	1. Product viscosity or too cold.	Thorough thaw of product before use (35° - 40°)
	2. Low water pressure.	Maintain 30 psi or higher and a minimum dynamic flow rate of 4.5 fl oz/sec.
	3. High water pressure.	Over 100 psi, install a pressure regulator and set to 50 psi.
	4. Dispense valve adjustment setting.	A) Perform 3 second water dispense test. Factory setting is 133 ml in 3 second dispense. B) Adjust water to 133 mL/3 sec.. Once water is set, adjust motor speed to achieve brix degrees.
	5. Brix ratio.	Check for proper brix ratio per product using Ratio method and or refractometer method.
Difficulty brixing and/or weak beverage	1. Pump tubing.	Inspect, clean, or replace tubing and pump rotor/rollers for ease of rotation.
	2. Use of portable water pump.	A) Follow plumbing requirements for pressure and flow rate. B) Source another portable pump or water supply that meets requirements.
Difficulty brixing bag-in-box	Vacuum leak	Inspect all lines and connections from bag-in-box connector to bottle adapter assembly.

TROUBLESHOOTING (cont.)

PROBLEM	PROBABLE CAUSE	REMEDY
Only Water Flowing from Faucet	1. Bag-in-Box (BIB) or caddy is empty.	1. Change BIB to full BIB or refill the caddy with more product.
	2. BIB or caddy is not engaged in bottle adapter properly.	2. Lift BIB or caddy out of adapter and seat it back down properly. Follow step-by-step instructions on priming product through the system.
Head on Beverage Thinner than Desired	1. System is not set to temperature yet (ice bank not fully formed).	1. Wait until system is fully cooled and ice bank fully formed before setting preferred N2 pressure. Check Compressor switch is set to ON and sight gauge shows full water bath. If water bath sight gauge is low, press Dispense switch to OFF. Wait a few seconds. Press Dispense switch to ON. Bath will automatically start filling water bath after 30 seconds.
	2. a) Tank regulator is below 125 psi (red LED Nitrogen "Out" light is flashing on dispenser door).	2. a) Adjust tank regulator by turning the T-handle clockwise until needle reaches 125 psi. Dispense a drink to make sure needle stays set at 125 psi.
	b) Gas leak on tank regulator.	b) If gas is leaking from tank regulator, replace tank regulator by contacting manufacturer or supplier.

TROUBLESHOOTING (cont.)

PROBLEM	PROBABLE CAUSE	REMEDY
Coffee is Weaker than Desired	1. BIB or caddy is empty.	1. Change to full BIB or replenish caddy with more product.
	2. Product pump tubing is worn.	2. Contact authorized service agent or perform product tubing replacement if authorized to do so.
	3. Build-up is occurring in nozzle and system needs cleaning.	3. Remove nozzles and clean with sanitizing solution to remove build-up. Follow Care and Cleaning instructions and run sanitizing solution through system.
	4. Brix is off target and needs adjustment.	4. Follow set-up instructions to adjust Brix.
Coffee is Stronger than Desired	1. Water supply is turned off or too low water pressure from source/inlet. 2. Internal booster pump is not running or pumping.	1. Assure required water connection was made properly and if there's a shut-off valve, make sure shut-off valve is open. Check that water inlet pressure has dynamic operating pressure between 30 to 90 psi. If below 30 psi, install water booster pump for adequate water pressure to supply line of dispenser.
	2. Brix is off target and needs adjustment.	2. Follow set-up instructions to adjust Brix

TROUBLESHOOTING (cont.)

PROBLEM	PROBABLE CAUSE	REMEDY
Nothing Flowing from Nozzles	1. Dispense switch is OFF.	1. Turn Dispense switch ON.
	2. Gas, coffee, and water not connected.	2. Assure all required connections are made according to set-up instructions before operating the system.
Product Pouring Too Warm and/or Inside Cabinet Too Warm	1. System has not reached temperature (ice bank not fully formed).	1. Wait until system is fully cooled and ice bank fully formed. Check Compressor switch is set to ON and sight gauge shows full water bath. If water bath sight gauge is low, press Dispense switch to OFF. Wait a few seconds. Press Dispense switch to ON. Bath will automatically start filling water bath after 30 seconds.
	2. BIB or caddy is ambient temp and needs to cool down.	2. Best practice is to use a chilled BIB or caddy for proper nitrogenation. If using ambient concentrates, chill BIB or caddy first prior to using.
	3. Water bath pump not running.	3. Confirm the water bath pump is running.

TROUBLESHOOTING (cont.)

PROBLEM	PROBABLE CAUSE	REMEDY
Irregular Flow from Nozzle 1. Flow is pulsating/ hammering	1. The product pump speed is set too high (at max) to dispense a lower ratio product (below 4:1).	1. Use a more appropriate concentrate (between 4:1 to 11:1) and adjust the product dial to the proper Brix setting.
2. Flow coming out at an angle	2. The nozzle has accumulated build-up or debris.	2. Remove nozzles and clean with sanitizing solution to remove build-up. Follow Care and Cleaning instructions and run sanitizing solution through system.
3. Flow rate is slow	3. a) The nozzle has accumulated build-up or debris b) The water needle valve on right-side of deck may be set too low (only affects Still Dispense station) c) The system needs cleaning	3. a) Remove nozzles and clean with sanitizing solution to remove build-up. Follow Care and Cleaning instructions and run sanitizing solution through system. b) Water flow rate should be factory pre-set to 133 ml (4.5 oz) per 3 second dispense. To verify, follow water flow setup process in installation and operating manual. c) Clean the system by following the Care and Cleaning instructions.

TROUBLESHOOTING (cont.)

PROBLEM	PROBABLE CAUSE	REMEDY
Unit Performing Inconsistently (Brix/Nitro fluctuating wildly or outside normal range)	1. System was installed/set-up incorrectly or has been placed in an environment with unacceptable conditions: a. Incorrect water line size	1. a) Install a water line that is in accordance with machine specifications.
	b. Incorrect gas line size	b) Install a gas line that is in accordance with machine specifications.
	c. Fluctuations in water or gas supply pressures	c) Assure the unit is being fed consistent and constant gas and water pressure.
	d. Ambient temperature too high or low	d) Place the unit in a location in accordance with machine specifications.
	2. System has internal malfunction and needs service by a technician	2. Call Customer Support for assistance.

SERVICE

This section provides procedures for testing and replacing various major components used in this dispenser should service become necessary. Refer to Troubleshooting for assistance in determining the cause of any problem.

WARNING - Inspection, testing, and repair of electrical equipment should be performed only by qualified service personnel. The dispenser should be disconnected from the power source when servicing, except when electrical tests are required and the test procedure specifically states to connect the dispenser to the power source.

COMPONENT ACCESS

WARNING - Disconnect the dispenser from the power source before the removal of any panel or the replacement of any component. All components are accessible by opening the door, removal of the door panels, dispenser top covers, hopper(s), hopper support plate, splash guard, splash panel w/ drip tray, lower front access panel and rear access cover. Refer to the contents listing for component location.

Access Panels

Location:

Before removing panels, make sure power is OFF to the machine and water is disconnected accept where indicated in testing procedures. Retain all screws and other attaching hardware for re-assembly.

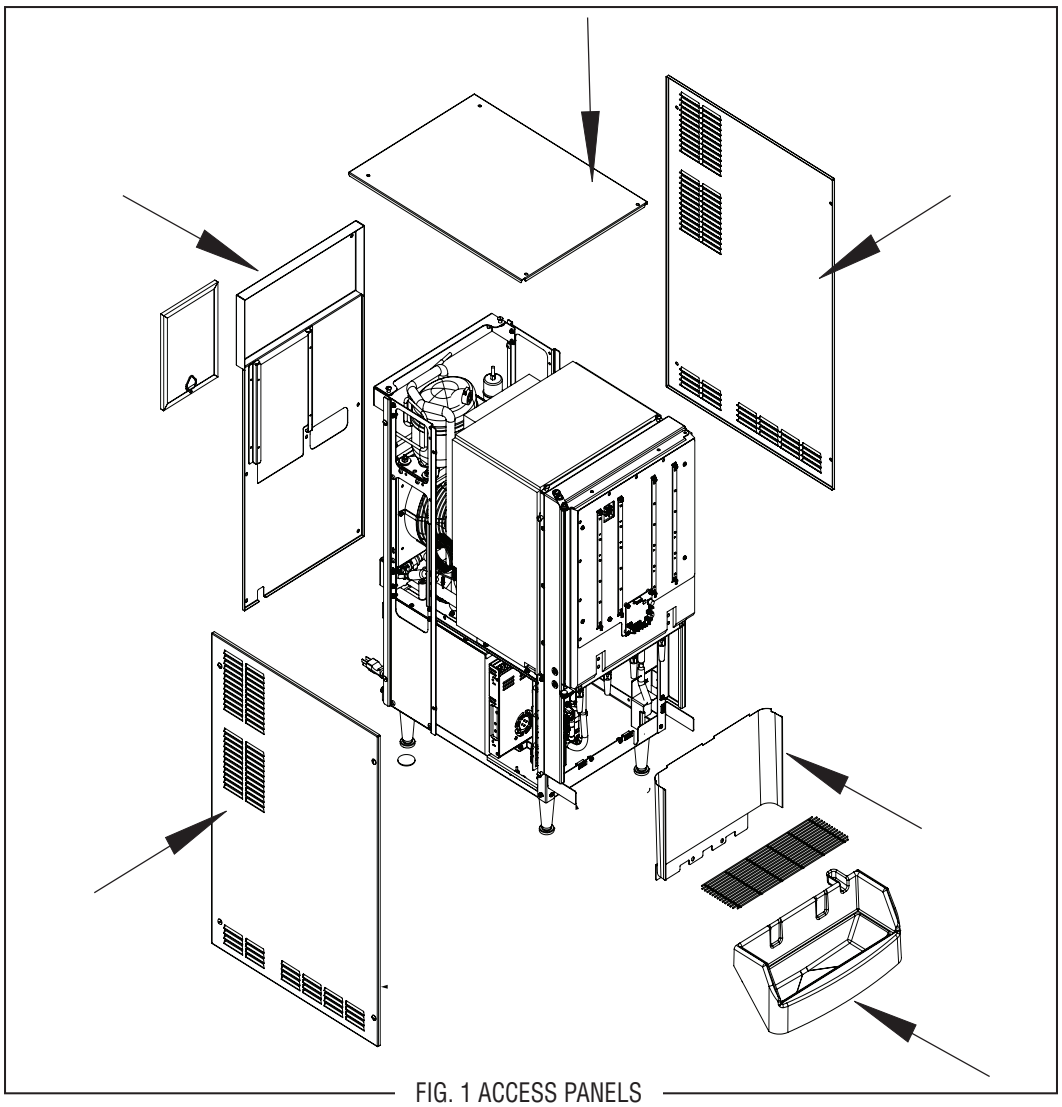

FIG. 1 ACCESS PANELS

SERVICE(CONT.)

Dipsenese Platform Removal

1. Unplug the Dispenser from the power source.
2. Open cabinet door, remove the product containers or BIB's from the dispenser cabinet and store away in a refrigerated environment if you plan on using again.
3. Locate the N_2 supply cylinder and verify it only supplies nitrogen to the BUNN nitron$_2$ Cold Draft dispenser. Turn the main cylinder On/Off valve to the Off position and turn Off the main water supply. Place an empty container under the dispense nozzles. Pull the "Nitro Coffee" tap handle to relieve the pressure.
4. Remove concentrate dispense tips by turning 1/4 turn to the left, then pull straight down.
5. Lift and remove product shelf to access dispense platform.
6. Remove front thumb screw(s) holding dispense platform(s).
7. Disconnect 12 pin connector above dispense platform(s) in rear.
8. Disconnect the N_2 and water line at the dispense platform(s).
9. Remove dispense platform by pulling forward.

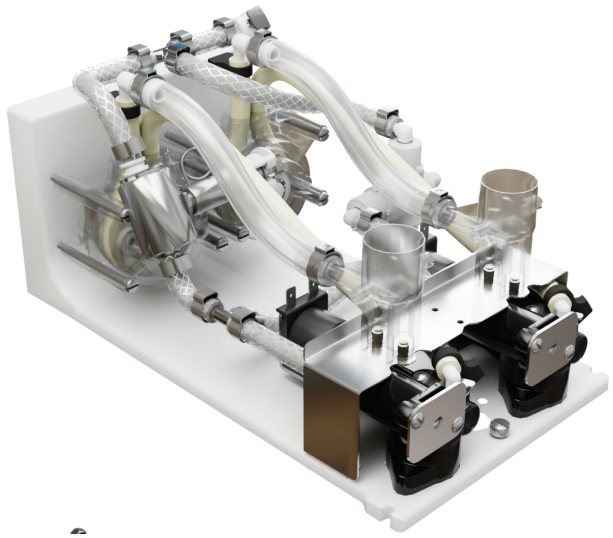

FIG. 2 NITRO DISPENSE PLATFORM REMOVAL

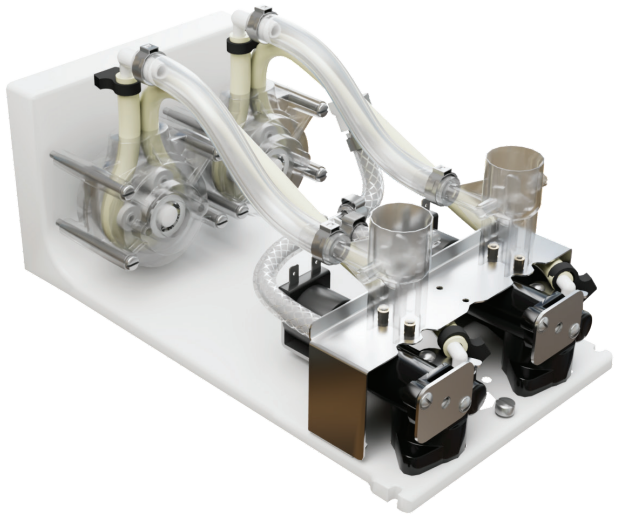

FIG. 2.1 STILL DISPENSE PLATFORM REMOVAL

FACTS ABOUT HYDROCARBON REFRIGERANT R-290

- Hydrocarbon (HC) refrigerants have been in use since the late 1800's, and in conjunction with ammonia, were the most widely used refrigerants prior to the introduction of chlorinated fluorocarbon (CFC) refrigerants in the1930's.
- Most recently (10+ years), hydrocarbon refrigerants have been used in both residential and commercial refrigeration equipment outside the United States, particularly in Europe.
- R-290 is refrigerant grade high purity odorless propane (C3H8). It is NOT barbecue grill propane.
- R-290 has an Ozone Depletion Potential, or ODP of 0.
- R-290 has a Global Warming Potential, or GWP, of 3. For reference, R-134a has a GWP of 1430, R-404A has a GWP of 3922, and R-452A has a GWP of 2,140.
- R-290 is non-toxic.
- R-290 has great thermodynamic properties which lead to higher efficiency and lower operating cost.
- R-290 operates at lower temperatures and pressures than R-404A and R-452A.
- R-290 is designated as an ASHRAE class A3 refrigerant, indicating higher flammability. Fig. 1



fig 1



fig 2

Facts About Servicing Hydrocarbon Refrigerant R-290:

- DANGER: PROPANE IS FLAMMABLE; RISK OF FIRE OR EXPLOSION. You MUST observe caution and proper safety practices when servicing equipment with R-290. Fig. 1 & 2
- Servicing refers to making repairs to the hermetically sealed refrigeration system or any part of the electrical system.
- EPA certification is not required for handling R-290. Although specialized training is not mandated, it is highly recommended (online training is available).
- There is a 150 g (5.3 oz.) limit on the amount of R-290 charge for self-contained commercial refrigeration applications.
- Any time that the refrigeration system is opened, the filter drier should be replaced.
- The Environmental Protection Agency (EPA) under Section 608 of the Clean Air Act exempts R-290 from the venting prohibition. R-290 can therefore be vented into the atmosphere under certain conditions. This means outdoors, in a well ventilated area. However, indoors, due to safety concerns, it is recommended that R-290 be removed with a recovery machine rated for hydrocarbon refrigerants.
- Red labels are installed on the process tubes on R-290 systems. These labels indicate that the machine contains a flammable refrigerant, and they must be replaced once the servicing of the system is complete.
- Before beginning work on a system containing R-290, it is necessary to perform a site survey to ensure that any potential hazards are eliminated, and to communicate about the work to be done.

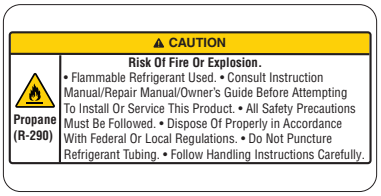

fig 4



fig 5

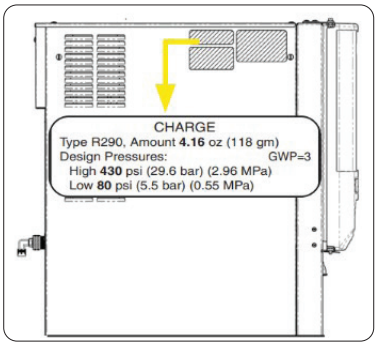

fig 6

- Post a warning placard in plain view on the front of the machine being serviced and section off the immediate area. Fig. 2
- Check for any ignition sources and make sure that there are no ignition sources within 10 feet of the immediate service work area.
- Ensure that the area where the service will be performed has adequate ventilation. If not adequate, move the equipment to a well ventilated area before servicing.
- Combustible gas leak detector is required and be placed at a low level in the immediate work area.
- An approved fire extinguisher must be readily available.
- Make sure that the equipment being serviced, is unplugged, or safely disconnected from the electrical supply. The equipment should remain disconnected from the electrical supply until after the service is completed.
- The location manager and all personnel within the immediate area must be instructed on the nature of the work to be carried out and all safety precautions.
- Carefully read and follow all notices on the equipment and in these instructions. They were written for your protection. Fig. 4 & 5
- All notices are to be kept in good condition. Replace any unreadable or damaged labels. Fig. 4 & 5
- Important for the service technician to be completely familiar with the equipment, refrigerant/charge amount, and all refrigeration tools before performing service. Fig. 6

FACTS ABOUT HYDROCARBON REFRIGERANT R-290 (continued)

Accessing a System with R-290

Before Opening the System

- Post a warning placard in plain view on the front of the machine.
- Turn on a combustible gas leak detector and locate it at a low level in the immediate work area.
- Disconnect the machine from the power source.
- Red (R-290) labels are installed on the process tubes on R-290 systems. These labels indicate that the machine contains a flammable refrigerant, and they must be replaced once the servicing of the system is complete. Access (piercing) valves will be installed to access the R-290 system.

Opening the System

- Install access (piercing) valves, per the manufacturer's recommendation, on both the high-side and the low-side process tubes, as close as possible to the pinch off area.
- Connect a refrigeration gauge manifold equipped with hoses that are as short as possible (12" long is recommended) to the 2 access (piercing) valves.

Removing the R-290 From the System

- The Environmental Protection Agency under Section 608 of the Clean Air Act exempts R-290 from the venting prohibition. R-290 can therefore be vented into the atmosphere under certain conditions. This means outdoors, in a well ventilated area. However, indoors, due to safety concerns, it is recommended that R-290 be removed with a recovery machine that is rated for hydrocarbon refrigerants.
- If the machine can be moved to an outdoor area that is well ventilated, away from any public area or structures, and where there are no ignition sources within 10 feet, R-290 can be cautiously vented into the environment.
- If the machine must remain indoors and a recovery unit rated for hydrocarbon refrigerants is available, follow the recovery unit manufacturer's recommendations to recover R-290 from the machine.
- If the machine must remain indoors and a recovery unit rated for hydrocarbon refrigerants is not available, use the following procedure.
- Evacuate an empty recovery cylinder to a minimum level of 25 in Hg (635,000 microns).
- Securely connect the evacuated cylinder to the refrigeration system using refrigerant manifold gauges and hoses.
- Open both refrigerant manifold gauge valves to allow refrigerant to flow through the gauges to the recovery cylinder. Be sure to recover from both sides.
- Once the pressures have equalized, close the valves on the refrigerant manifold gauges and the valve on the recovery cylinder securely.
- Carefully remove the refrigerant hose from the recovery cylinder.
- After venting or recovering R-290 using any of these procedures, purge the system with nitrogen for a minimum of 2 minutes before continuing.

Repairing the R-290 System

- Remove the defective refrigeration system component. Use a tubing cutter to remove the component from the system. Do not use a torch to de-braze the connections from the component that is being replaced.
- Install the new component.
- Prior to brazing, make certain that the 2 process tubes that remain have enough length for any future service. If necessary, remove the 2 access (piercing) valves and install longer process tubes with brazed pinched off ends. Reinstall the access (piercing) valves.
- Connect nitrogen, with regulator set at 3 to 4 psig, to either the high or low process tube and flush through the system for 2 minutes before brazing.
- Purge nitrogen through the system at 1 to 2 psig while brazing.
- Braze all the new connections.
- Pressurize the system with nitrogen to 175 psig and check for any leaks.

FACTS ABOUT HYDROCARBON REFRIGERANT R-290 (continued)

Evacuating the System

- Purge nitrogen through the system at 3 to 4 psig before evacuating the system.
- Release the nitrogen to 1 to 2 psig before connecting the machine to the vacuum pump.
- Connect a vacuum gauge near the machine and connect a vacuum pump so that both sides of the system will be evacuated.
- Pull a vacuum on the system to 500 microns or less.
- Remove the vacuum pump and make sure that the vacuum holds for at least 10 minutes.
- If the vacuum holds, proceed with charging the system. If not, purge the system with nitrogen and repeat the evacuation process until the vacuum is held for at least ten minutes.

Charging the System with R-290

Before Charging

- Ensure that the system has been thoroughly leak checked and evacuated to at least 500 microns.
- Ensure that a combustible gas leak detector is turned on and located at a low level in the immediate work area.
- Charging must be performed in a well-ventilated area.
- Check the manufacturer's label for the required charge amount.

Charging

Note: Use only refrigerant grade propane (R-290)

Note: The charge amount is critical with R-290. Weigh in the exact charge amount.

Note: R-290 is not a refrigerant blend, so it may be charged as either a liquid or gas, although the preference is to charge into the high-side as a liquid.

- Ensure that both valves at the gauge manifold that is connected to the machine are closed.
- Connect the charging hose from the gauge manifold to the R-290 cylinder.
- Open the valve on the R-290 cylinder and place it on the scale.
- Make sure that the charging cylinder and hoses are stabilized so that they cannot move during the charging process.
- Tare the scale.
- Purge air from the hoses to the machine.
- Open the high-side valve slowly and charge the system with the exact amount of R-290.
- If the full charge amount cannot be achieved on the high-side, close the high-side valve.
- Start the machine and allow it to run for one minute.
- With the machine running, open the low-side valve slowly and complete the charging with the exact amount of R-290.
- Turn the machine off.
- Follow common practices to confirm the proper operation of the system.

Removing the Access Valves and Sealing the System

Note: Do not leave the access (piercing) valves on the system.

- Ensure that a combustible gas leak detector is turned on and located at a low level in immediate work area.
- Use a crimping tool to crimp the process tube about ½ inch behind the access (piercing) valve. Make a second crimp from the opposite direction about another ½ inch back from the first crimp and keep the crimping tool in place.

- Verify that there are no leaks and then remove the access (piercing) valve from the tube.
- Break the tube at the first crimp and check for leaks.
- Braze the open end closed with the crimping tool in place and then remove the crimping tool.
- Repeat this process for the other process tube.
- Verify that there are no leaks at the brazed end of each of the process tubes.
- Replace the red (R-290) labels on the process tubes.

BASIC OVERVIEW

Refrigeration Group

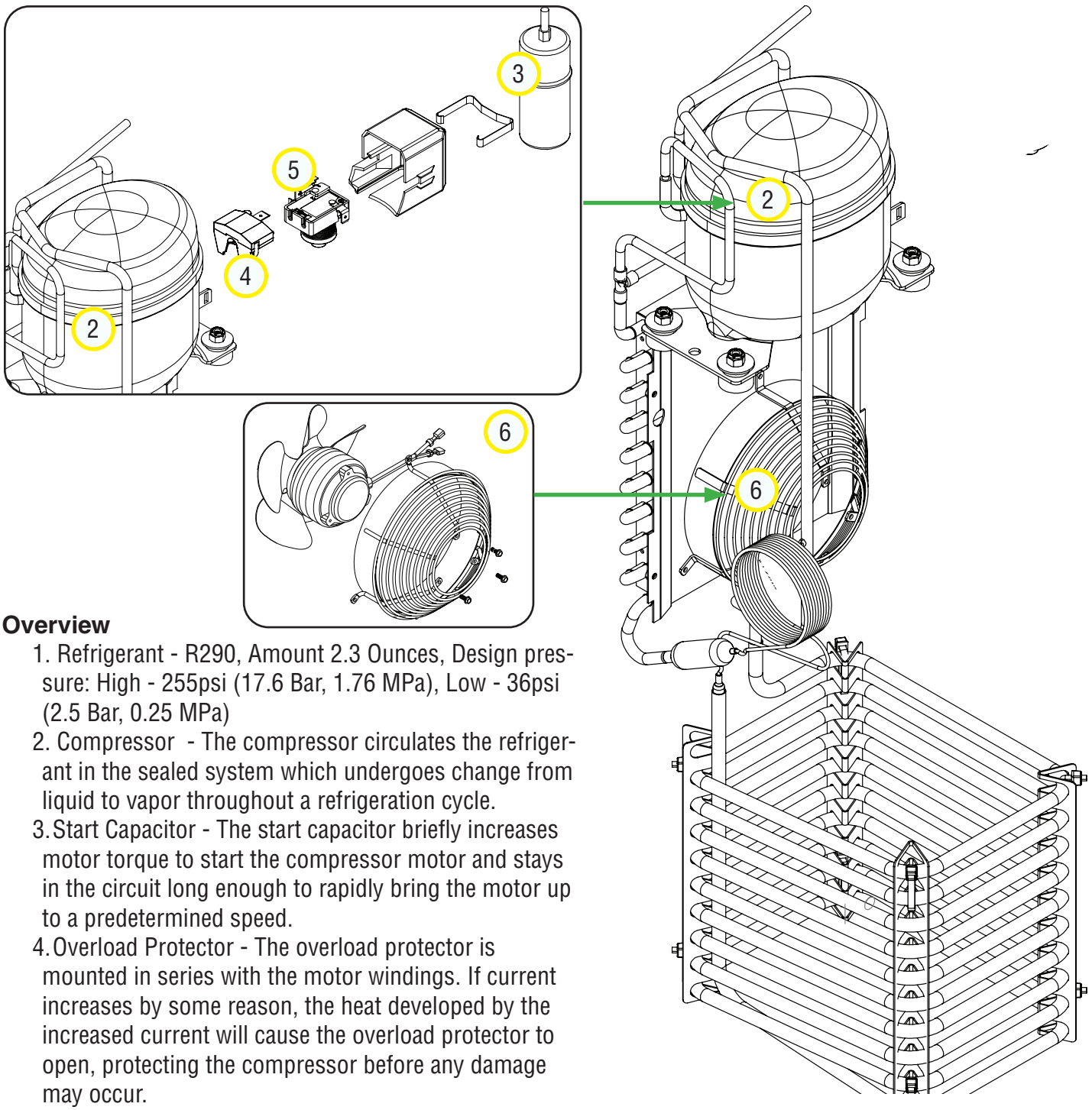

Overview

1. Refrigerant - R290, Amount 2.3 Ounces, Design pressure: High - 255psi (17.6 Bar, 1.76 MPa), Low - 36psi (2.5 Bar, 0.25 MPa)
2. Compressor - The compressor circulates the refrigerant in the sealed system which undergoes change from liquid to vapor throughout a refrigeration cycle.
3. Start Capacitor - The start capacitor briefly increases motor torque to start the compressor motor and stays in the circuit long enough to rapidly bring the motor up to a predetermined speed.
4. Overload Protector - The overload protector is mounted in series with the motor windings. If current increases by some reason, the heat developed by the increased current will cause the overload protector to open, protecting the compressor before any damage may occur.
5. Start Current Relay - The current relay contacts are normally open and are wired in series with the start winding. The contacts will close when power is applied to assist in the start up of the compressor. Once the motor has reached about 3/4 of its speed, the run winding will start decreasing in current draw which will decrease the magnetic force while gravity forces the relay contacts back to their normally open position which drops out the start winding.
6. Condenser & Fan Assembly - The condenser fan will move ambient air across the condenser coil enhancing the cooling process (transfer of heat) from the high pressurized refrigerant gas to the point where it will condense back to a sub cooled liquid. The condenser coil is made up of copper tubes/aluminum fins for the purpose of transfer and removal of heat from the heated gas within the condenser tubing.

Continued

BASIC OVERVIEW

Refrigeration Group (Continued)

Overview

8. Filter Dryer - The Filter Dryer is a common accessory used in a refrigeration system to absorb and dry any moisture within the system to prevent a failure within the refrigeration system.
9. Capillary Tube & Evaporator - The evaporator coil is situated in a water tank, as the capillary tube provides the restriction and meters the refrigerant into the evaporator which creates a pressure difference between the high and low side of a refrigeration system. The change from high pressure to low pressure in the evaporator causes the refrigerant to boil at a low temperature which changes the state of the refrigerant from a liquid to a cool gas.

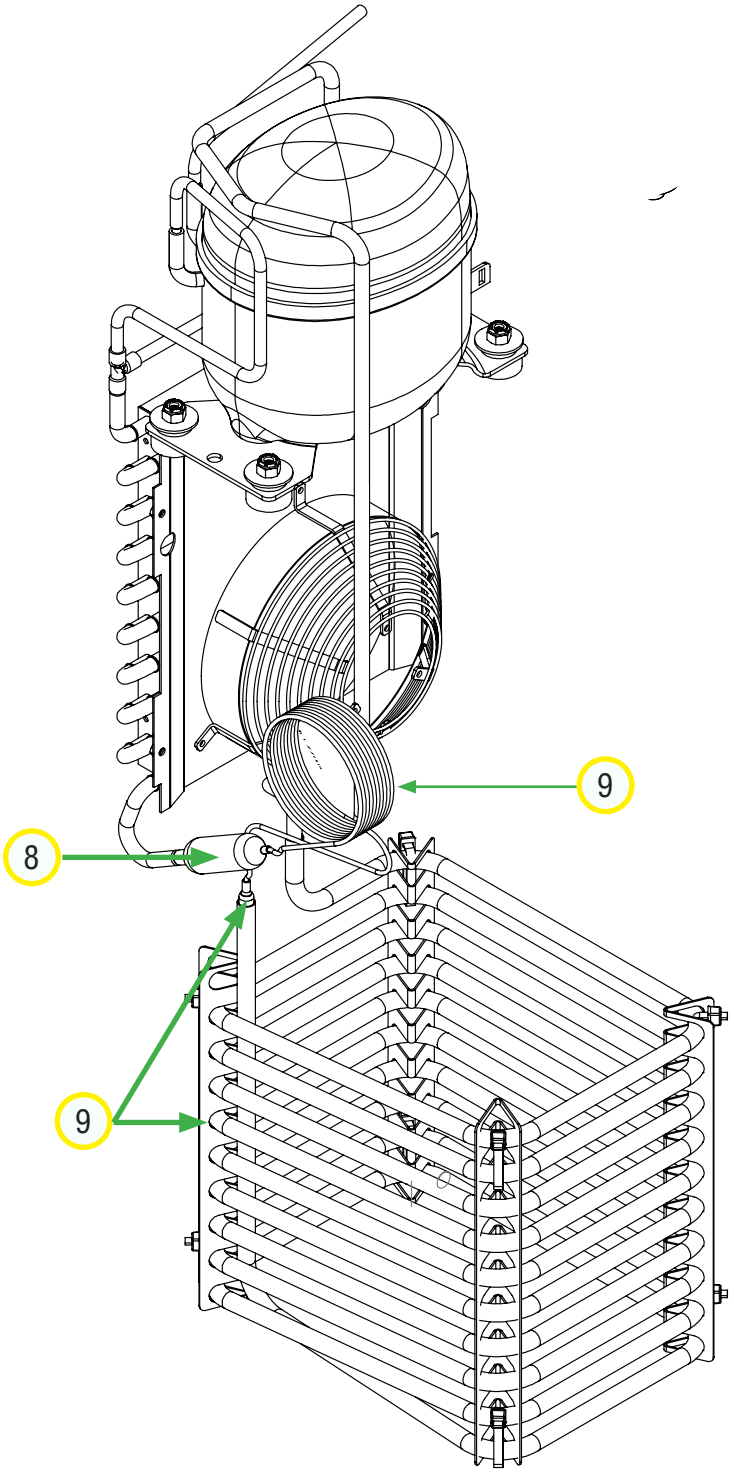

BASIC OVERVIEW

Cabinet Cooling Recirculation Pictorial

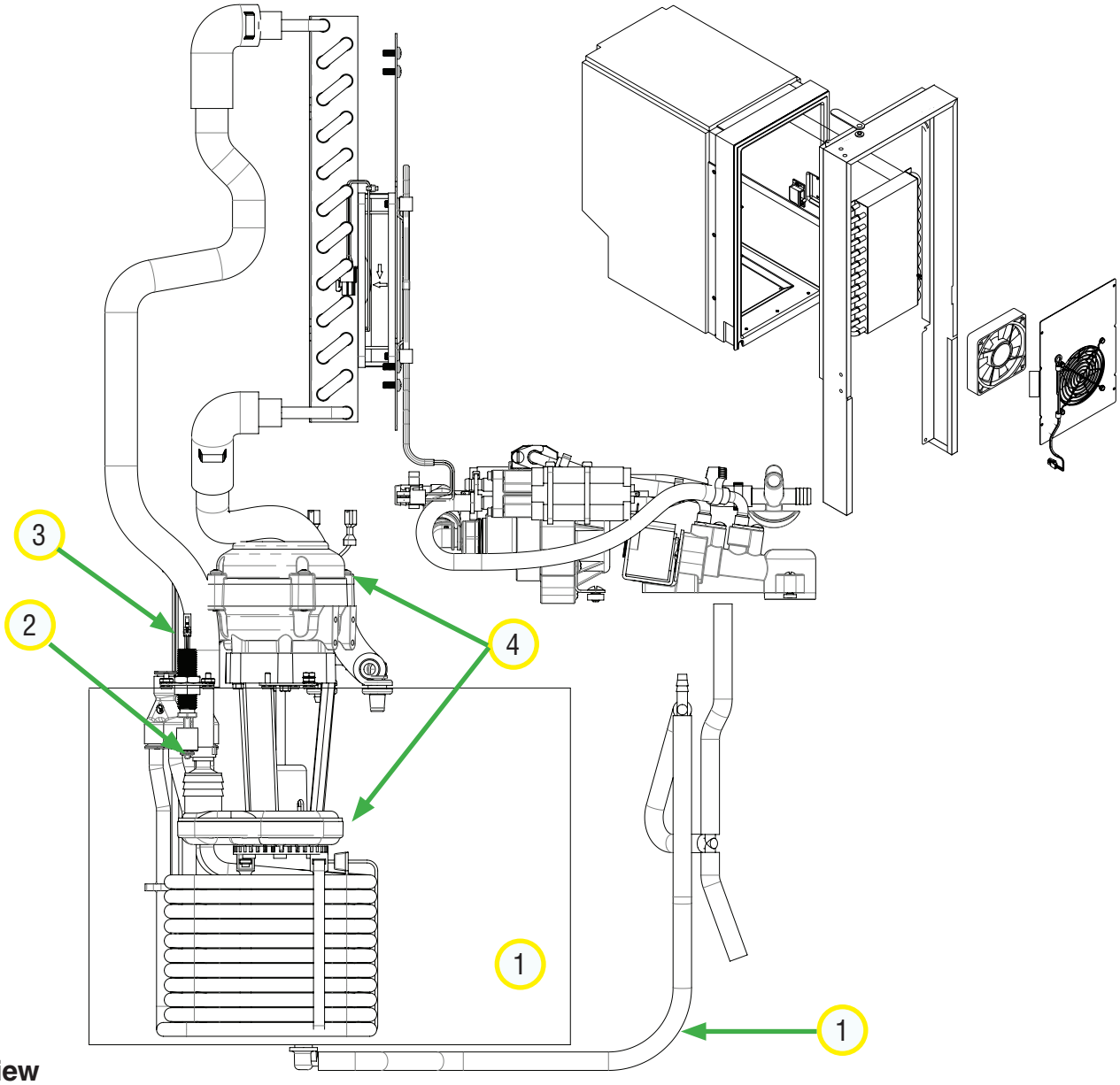

Overview

1. Water Bath Tank & Sight Gauge- The water tank holds the chilled non-potable water and ice bank which is used for cooling the cabinet and potable water coil. The sight gauge is used to view the non-potable water level and can be used to drain the water bath tank by lowering the sight gauge tube.
2. Water Bath Tank Float Switch - The float switch is used to monitor water level in the tank. The float in down position has the internal contacts closed, up position opens the internal contacts which stops the water tank fill process.
3. Ice Bank Temperature Sensor- The sensor will become frozen in the ice block, the resistance will increase to a threshold and in return signal to turn Off the refrigeration circuit. When the sensor starts seeing an increase in temperature because of a melting ice block, the sensor resistance starts decreasing which tells the control board to activate the refrigeration circuit.
4. Water Bath Recirculating Pump - The top load recirculating pump is mounted semi-centered in the water tank. The pump circulates chilled non-potable water from the water tank through a cabinet water coil and is returned back to the water tank continuously. Meanwhile, some percentage of water does not go through the entire circulation process but is bypassed directly back into the water tank for increased agitation, creating a uniform ice bank.

Continued

Cabinet Cooling Recirculation Pictorial (Continued)

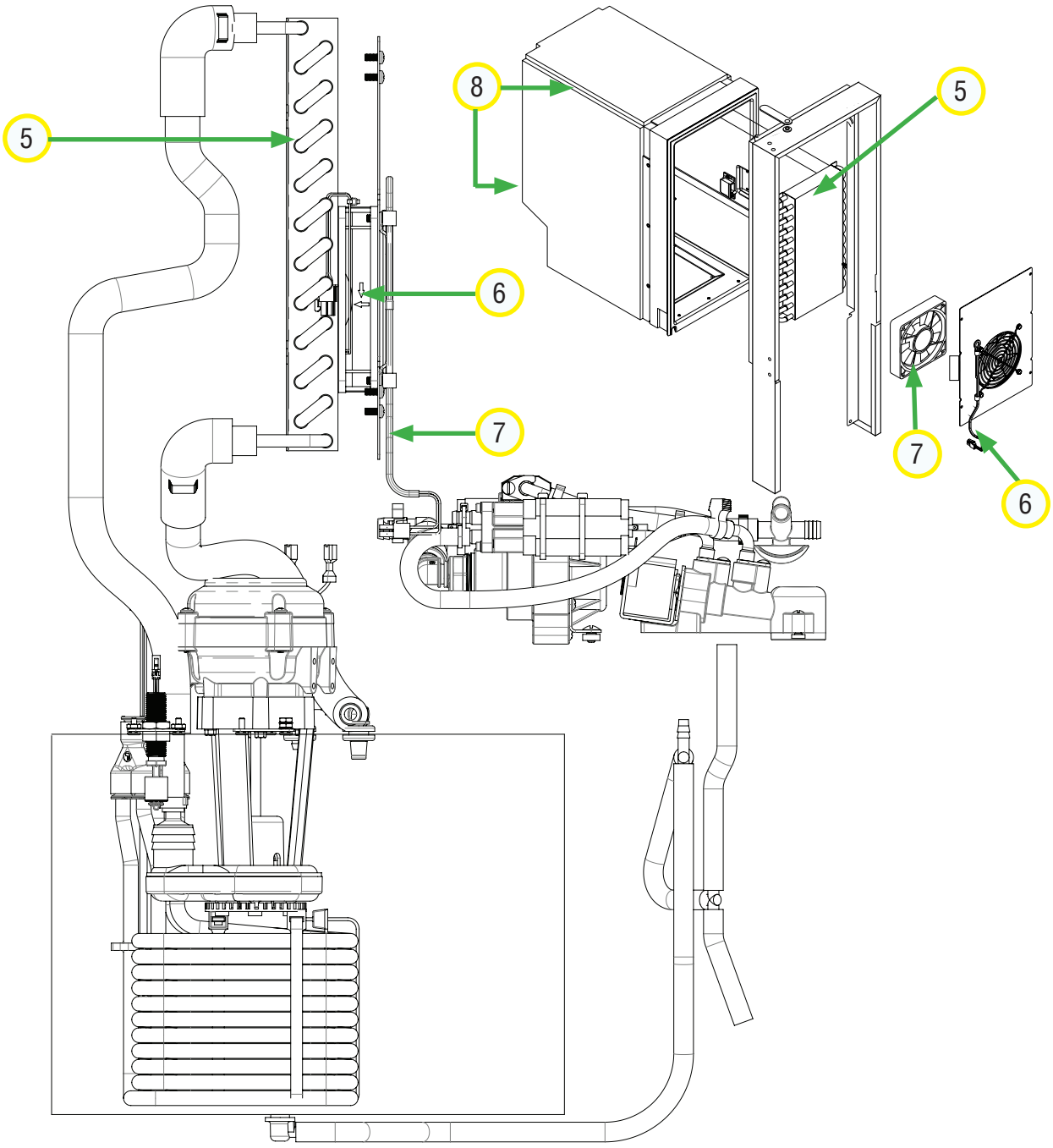

Overview

5. Cabinet Water Coil - When the non-potable chilled water is circulating through the cabinet water coil, the water coil is made of metal tubing and fins for the purpose of assisting with removal/transfer of heat from the upper cabinet.
6. Cabinet Fan - The cabinet fan moves air inside the cabinet across the cold cabinet water coil, thus dropping air temperature. This is a continual process of circulating cool air within the cabinet.
7. Cabinet Temperature Sensor - The sensor is located inside the cabinet, left of the fan intake. The sensor is used to monitor cabinet temperature which will be displayed on the door LED display and is used to trigger Temperature Fault.
8. Cabinet & Rear Drain Tube - The rear drain tube is for the purpose of draining any condensation that may be produced from the cabinet chilled water coil which is routed back to the water bath tank.

SERVICE (CONT.)

COMPRESSOR

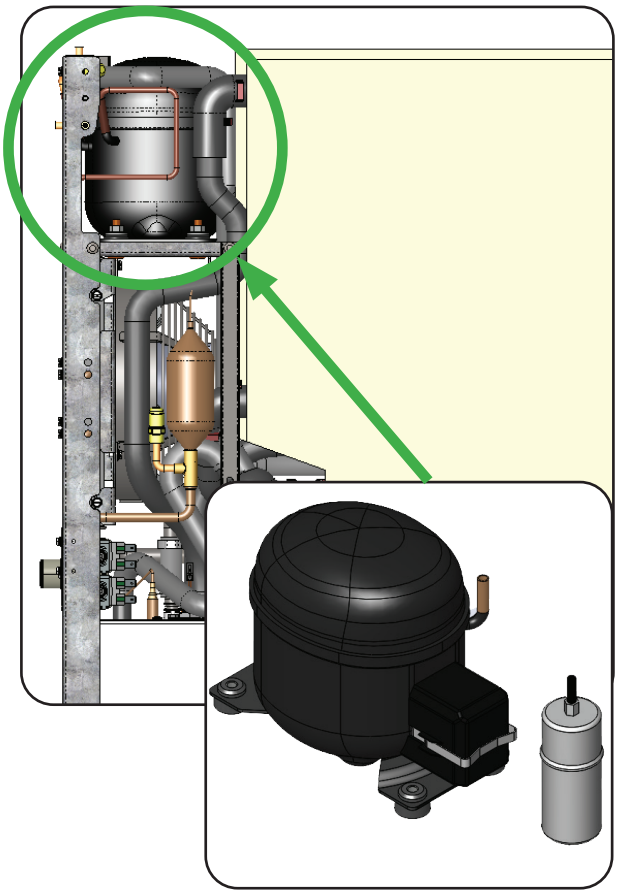

Description/Purpose:

A compressor is like a pump, increases the pressure of a gas by reducing its volume. The refrigerant in the sealed system undergoes change from liquid to vapor by the use of 4 components: compressor, condenser, expansion valve/throttle valve and evaporator. Hence refrigeration cycle.
Note: Only refrigerant vapor/gas cycles through the compressor.

The refrigeration process lowers the temperature of the water in the bath tank encasing the evaporator within an ice block.

Location:

- Machine right side
- Remove right, left, rear and/or top access panel

Specifications:

- Model: NBC30NR (CUBIGEL)
- 1/8 HP
- 115V, 60Hz, 1 PH
- Locked Rotor Amps: 12.10
- Run Load Amps: 2.43
- Main Winding Ohms: 3.85
- Start Winding Ohms: 27.0

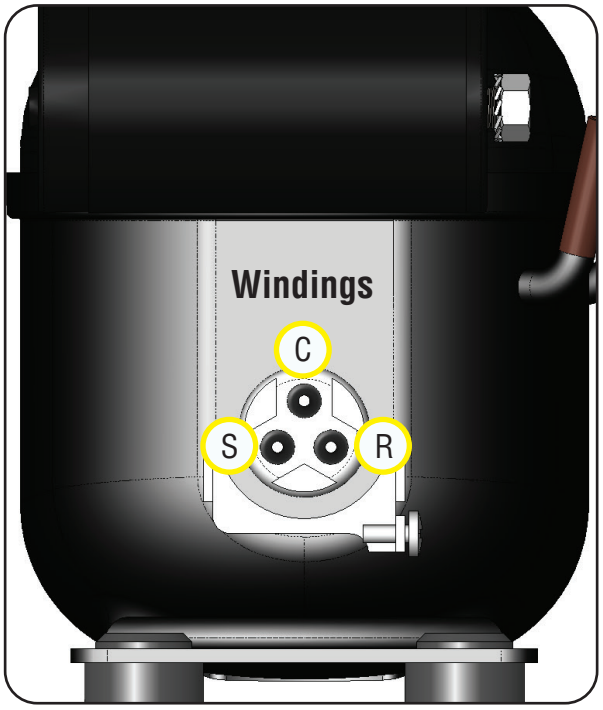

User and/or Machine Notification Symptom:

- Dispense drink temperature rising
- Machine not working/cooling
- Display reads “Loc” or CBA Cabinet Red LED flashes slowly (Cabinet > 50° F. for 4 hours)

Test Procedure:

1. Ensure compressor switch is turned ON
2. First, check the compressor starting components before compressor
3. Unplug or power down machine to reset compressor start up procedure. Power up machine and wait for the compressor 6 minute delay period to expire before checking compressor for 120VAC and/or amp draw
4. Unplug or disconnect machine from power.
5. Disconnect all starting components from windings. Check compressor windings for correct amount of Resistance/Ohms. See Specifications section

START CAPACITOR

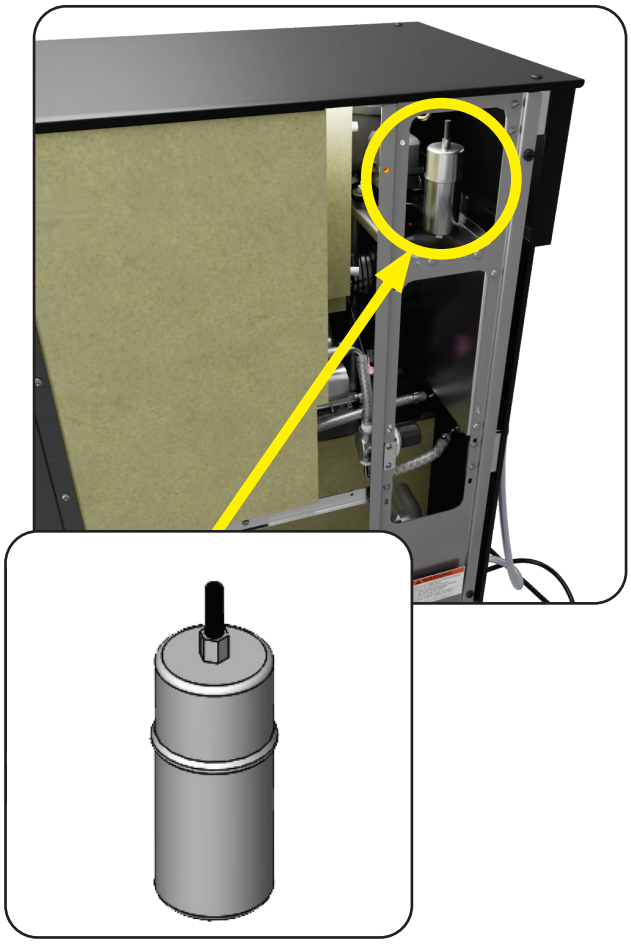

Description/Purpose:

The start capacitor briefly increases motor torque to start the compressor motor and stays in the circuit long enough to rapidly bring the motor up to a predetermined speed and is dropped out of the circuit by the compressor electromechanical current relay.

Location:

- Machine right side
- Remove right access panel

Specifications:

- 330V, 50/60Hz
- Micro-farad: 61 MFD +/- 15%

User and/or Machine Notification Symptom:

- Compressor will not start (humming) but over load protector trips
- Dispense drink temperature rising
- Machine not working/cooling
- Display reads “Loc” or CBA Cabinet Red LED flashes slowly (Cabinet > 50° F. for 4 hours)

Test Procedure:

Caution!! All new, old or defective capacitors need to be treated as they hold a “charge” and can be harmful. Before testing a capacitor, safely discharge the capacitor. Once the capacitor is fully discharged you can now begin testing of the capacitor.

1. Visually examine the capacitor for bulging or fluid leakage. If seen, replace capacitor
2. Use a capacitance meter to measure the capacitance. The meter capacitance reading must be within 15 % of the capacitor rating

OVERLOAD PROTECTOR

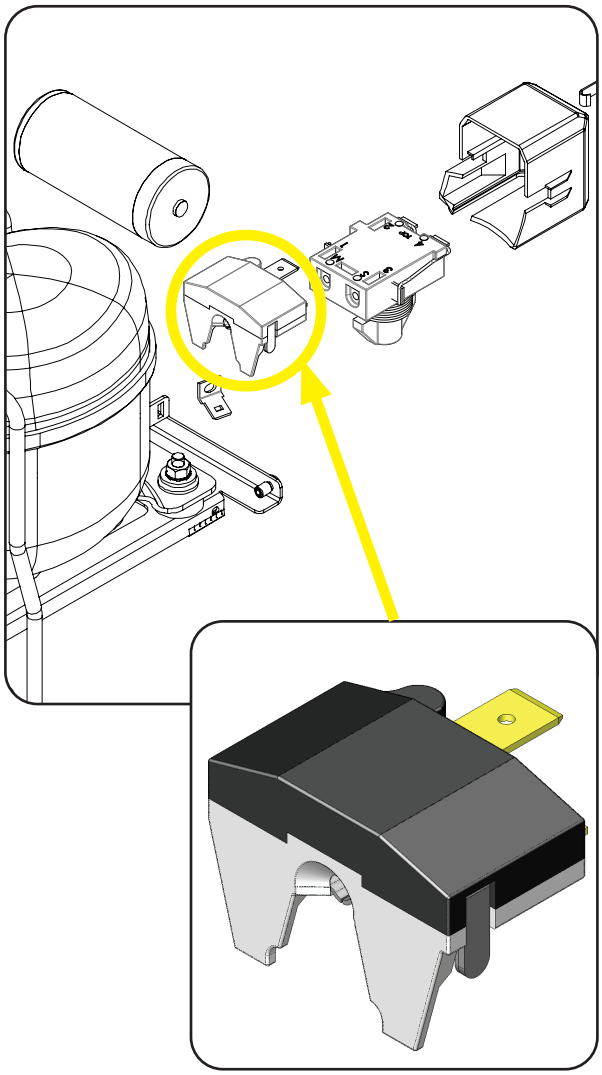

Description/Purpose:

The overload protector is mounted in series with the motor windings. If current increases by some reason, the heat developed by the increased current will cause the overload protector to open, protecting the compressor before any damage may occur.

Location:

- Machine right side
- Remove right access panel
- Remove compressor electrical cover

Specifications:

- Trip Current At 77° Fahrenheit : 12.1 Amps
- Opening Temperature: 302° +/-9° F.
- Closing Temperature: 142° +/-9° F.

User and/or Machine Notification Symptom:

- Compressor will not start
- Dispense drink temperature rising
- Machine not working/cooling
- Display reads “Loc” or CBA Cabinet Red LED flashes slowly (Cabinet > 50° F. for 4 hours)

Test Procedure:

1. Unplug machine or disconnect power.
2. Disconnect wire from overload protector and remove overload protector from compressor. Check overload for continuity at room temperature.

- No continuity - replace

3. Remove and inspect condenser air filter for cleanliness and/or clean.

SERVICE (CONT.)

START CURRENT RELAY

Description/Purpose:

The current relay contacts are normally open and are wired in series with the start winding. The contacts will close when power is applied to assist in the start up of the compressor. Once the motor has reached about 3/4 of its speed, the run winding will start decreasing in current draw which will decrease the magnetic force while gravity forces the relay contacts back to their normally open position which drops out the start winding.

Location:

- Machine right side
- Remove right access panel
- Remove compressor electrical cover

Specifications:

- 115VAC, 60Hz
- Pick-up Current: 5.3 Amps
- Drop Out Current: 4.5 Amps

User and/or Machine Notification Symptom:

- Compressor will not start
- Dispense drink temperature rising
- Machine not working/cooling
- Display reads “Loc” or CBA Cabinet Red LED flashes slowly (Cabinet > 50° F. for 4 hours)

Test Procedure:

1. Unplug machine or disconnect power. Disconnect wires from current relay and remove current relay from compressor.
2. Check the following current relay terminals 1 and 2 for continuity with the relay in up or down position. Continuity must be present.
3. No continuity - Replace current relay.

- Place relay coil in the upwards position. Continuity must be present between terminals 3 and 4.
- No Continuity - Replace current relay.

4. Place relay coil in the downwards position.

- No continuity must be present between terminals 3 and 4.
- Yes continuity - Replace current relay.

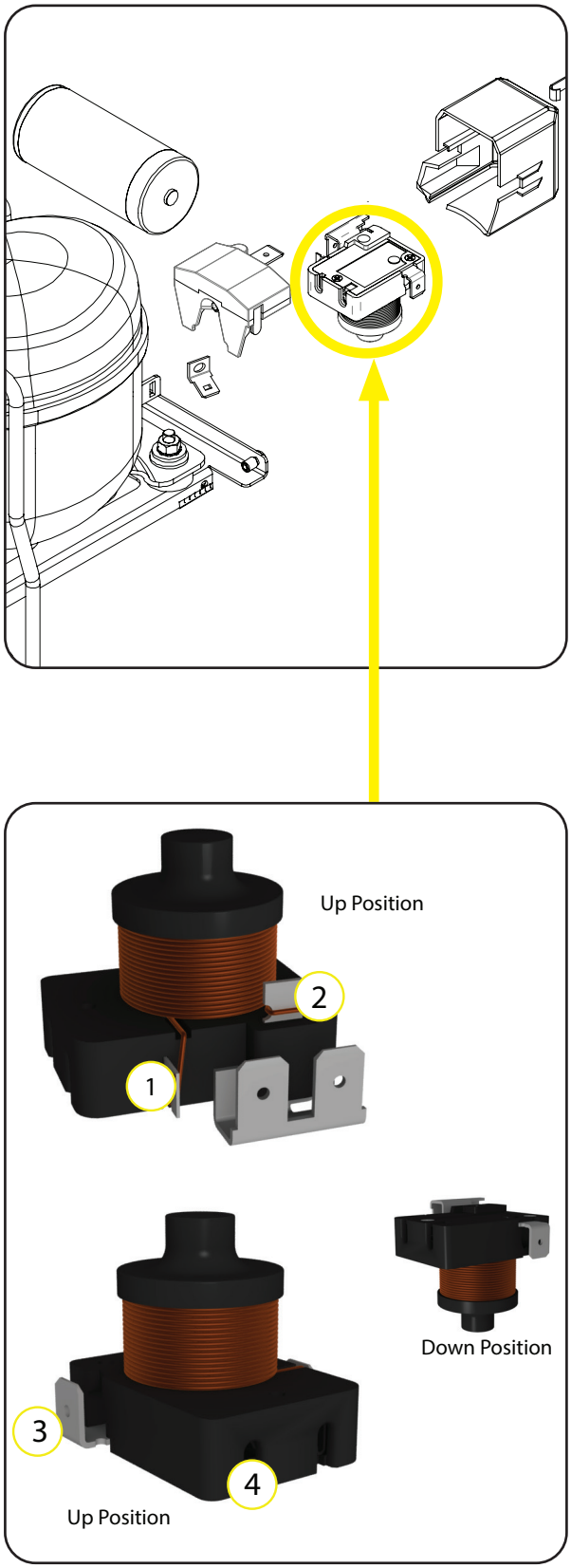

CABINET FAN



FIG. 3 CABINET FAN

Location:

The cabinet fan is located inside the dispenser cabinet mounted in the center behind the fan guard cover.

Test Procedure:

1. Disconnect the dispenser from the power source.
2. Remove the four screws attaching the fan and cover assembly.
3. Gently pull the cover forward and disconnect the 2-pin connector from the main wiring harness.
4. With a voltmeter, check the voltage across the two wire terminals of the main harness. Connect the dispenser to the power source. The indication must be 24 volts ac.
5. Disconnect the dispenser from the power source.

- If voltage is present as described, replace the fan.
- If voltage is not present as described, refer to the Wiring Diagrams and check the dispenser wiring harness back to the transformer (See TRANSFORMER).

Removal and Replacement:

1. Disconnect the dispenser from the power source.
2. Remove the four screws attaching the fan and cover assembly.
3. Gently pull the cover forward and disconnect the 2-pin connector from the main wiring harness.
4. Remove the fan from the cover assembly and discard the old fan.
5. Install the new fan to the cover assembly using screws previously removed.
6. Reconnect the fan to the 2-pin connector on the main wiring harness.
7. Install the fan and cover assembly to the cabinet using screws previously removed.
8. Reconnect power to the dispenser.

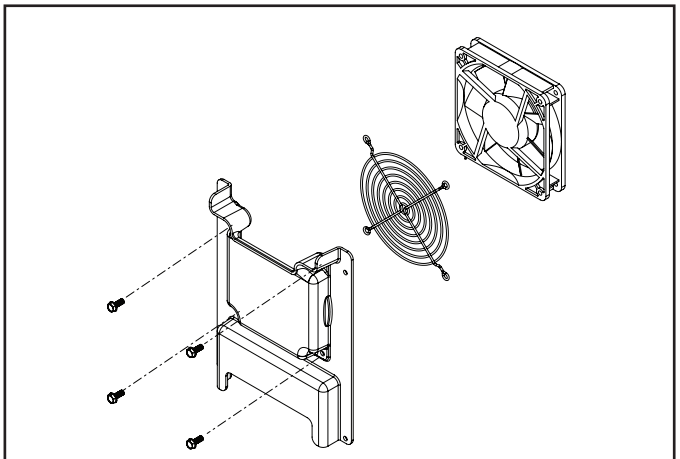

FIG. 4 CABINET FAN EXPLODED VIEW

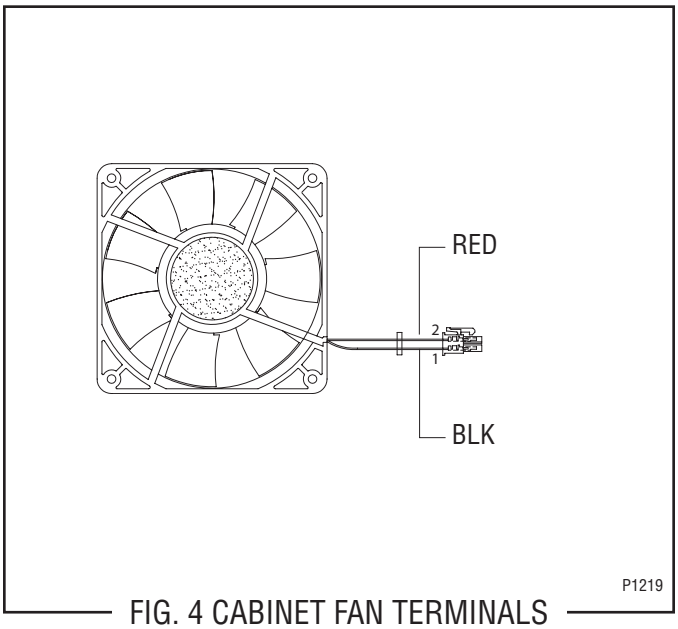

FIG. 4 CABINET FAN TERMINALS

Compressor Switch



FIG. 10 COMPRESSOR & PROGRAM SWITCH

Location:

The switch is located on the front left of the dispenser behind the splash panel.

Test Procedure:

1. Disconnect the dispenser from the power source.
2. Remove the two wires from the switch terminals.
3. Check for continuity across the switch terminals with the switch in the “ON” position. Continuity must not be present when the switch is in the “OFF” position.

If continuity is present as described, reconnect the wires to the switch terminals.
If continuity is not present as described, replace the switch.

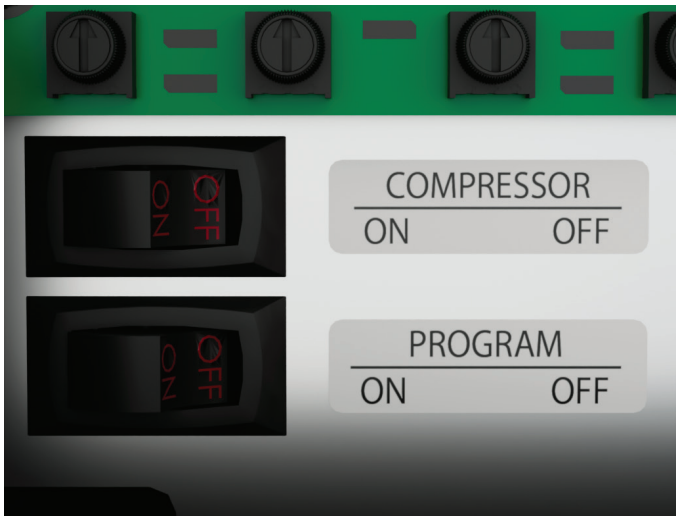

Compressor & Program Switch

Removal and Replacement:

1. Disconnect the dispenser from the power source.
2. Remove the cover or splash panel to gain access to the switch.
3. Gently disconnect the wiring harness from the switch.
4. Remove the switch from the mounting bracket and discard.
5. Install the new switch into the mounting bracket.
6. Reconnect the wiring harness to the new switch.
7. Install covers or panels previously removed.
8. Reconnect power to the dispenser.

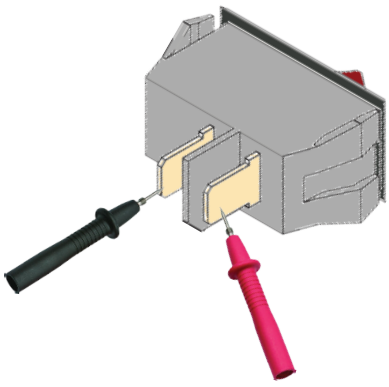

FIG. 11 COMPRESSOR SWITCH TERMINALS

SERVICE (CONT.)

Condenser Fan

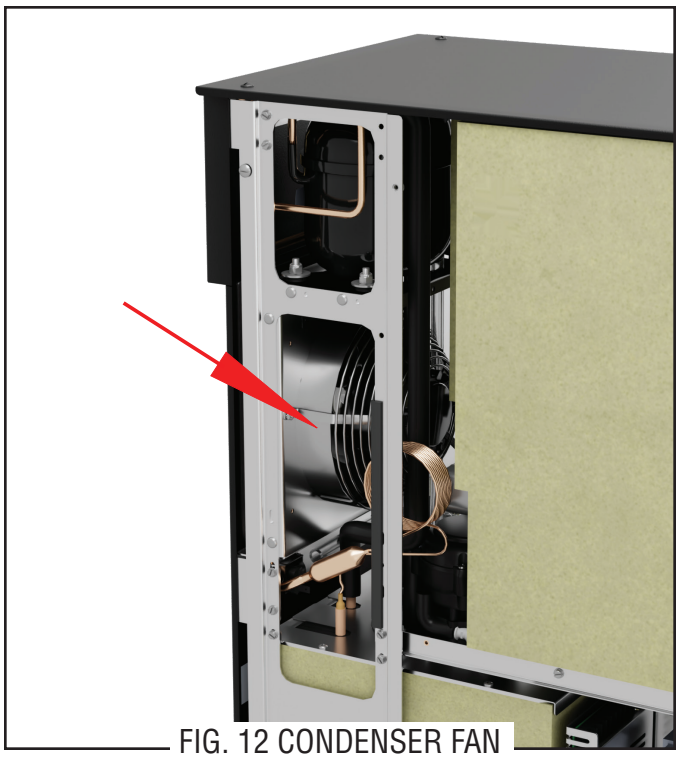

FIG. 12 CONDENSER FAN

Location:

The condenser fan is located inside the main frame below the compressor assembly.

Test Procedure:

1. Disconnect the dispenser from the power source.
2. Disconnect the 2-pin from the fan to the main wiring harness.
3. Check for continuity across the fan terminals.

If continuity is present as described, reconnect the wires to the fan terminals.
If continuity is not present as described, replace the fan.

Removal and Replacement:

1. Disconnect the dispenser from the power source.
2. Remove the four screws attaching the fan and wire guard to the mounting bracket.
3. Disconnect the 2-pin connector from the fan to the main harness.
4. Remove the fan from the wire guard and discard.
5. Install the new fan onto the wire guard..
6. Install fan and wire guard assembly using four screws previously removed.
7. Reconnect the wiring harness to the new fan.
8. Use wire ties where necessary to secure the wiring from any moving parts.
9. Reconnect power to the dispenser.

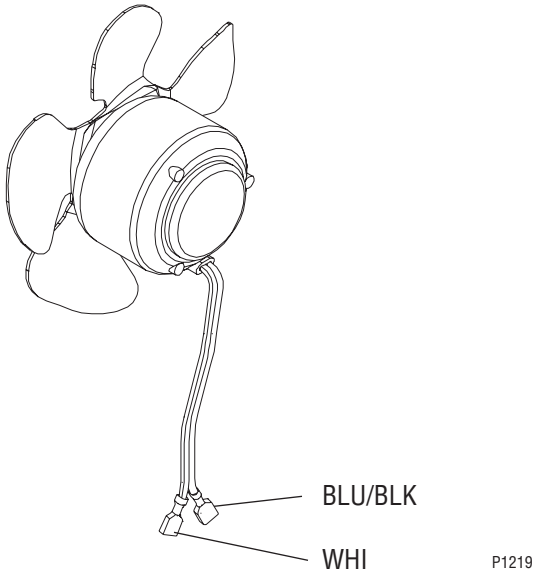

FIG. 13 CONDENSER FAN TERMINALS

Control Board, Main

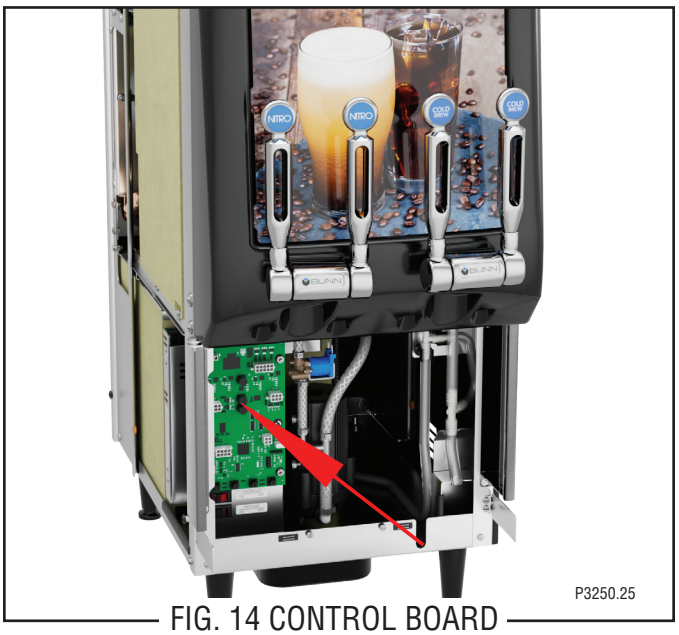

FIG. 14 CONTROL BOARD

Location:
The Main Control Board is located on the electrical component enclosure behind the splash panel.

Test Procedure:
Power Supply Circuitry:

1. Disconnect the dispenser from the power source.
2. With a voltmeter, check the voltage across pins 1 & 3 of the J6 connector on the wiring harness. Connect the dispenser to the power source. The indication must be 24 volts ac.
3. Disconnect the dispenser from the power source.

If voltage is present as described, proceed to step 4.
If voltage is not present as described, refer to the Wiring Diagrams and check the dispenser wiring harness back to the Power Supply (See Power Supply section).

4. Disconnect the dispenser from the power source.
5. With a voltmeter, back probe check the voltage across pins 1 & 3 of the J12 connector on the wiring harness. Connect the dispenser to the power source. The indication must be 24 volts ac.
6. Disconnect the dispenser from the power source.

If voltage is not present as described, refer to the Wiring Diagrams and check the dispenser wiring harness back to the transformer (See TRANSFORMER).

Removal and Replacement:

1. Disconnect the dispenser from the power source.
2. Remove the four #6-32 screws securing the control board to the component bracket.
3. Disconnect all the plugs on the main wiring harness from the connectors on the control board.
4. Remove the spacers from the control board and discard.
5. Install the spacers on to the new control board.
6. Reconnect all plugs on the main harness to the connectors on the control board.
7. Install new control board on the component bracket using four #6-32 screws.

NOTE: Verify all ground wires are connected to the grounding stud and secured with nuts.
NOTE: If the main circuit board is being replaced, the technician should also calibrate the water bath thermistor after the new board is installed.

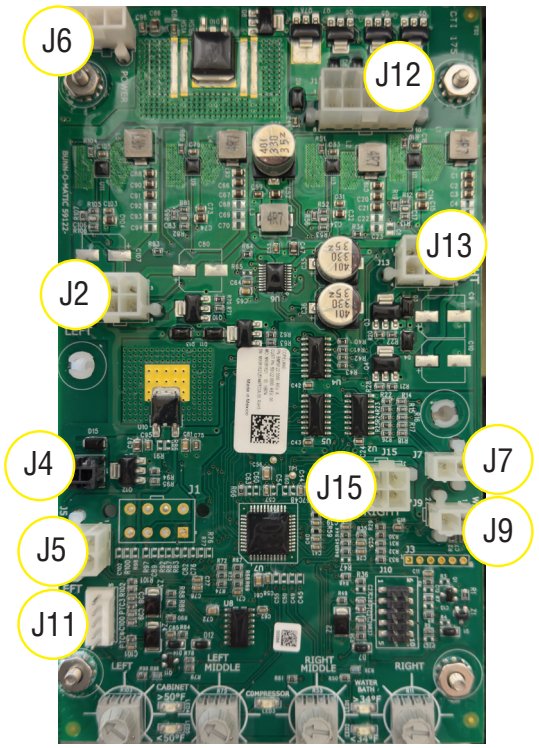

FIG. 15 CONTROL BOARD CONNECTORS

J-2	Station 1&2 Dispense Pumps and Solenoids
J-4	Compressor Relay Coil Terminals
J-5	Dispense Switch
J-6	Power
J-7	Cabinet Thermistor
J-9	Water Bath Thermistor
J-11	Door CBA (Auxiliary Board)
J-12	Inlet Valve, Bath Fill Valve, Booster Pump Relay Coil
J-13	Station 3&4 Dispense Pumps and Solenoids
J-15	Bath Float Switch

SERVICE (CONT.)

Auxiliary Control Board

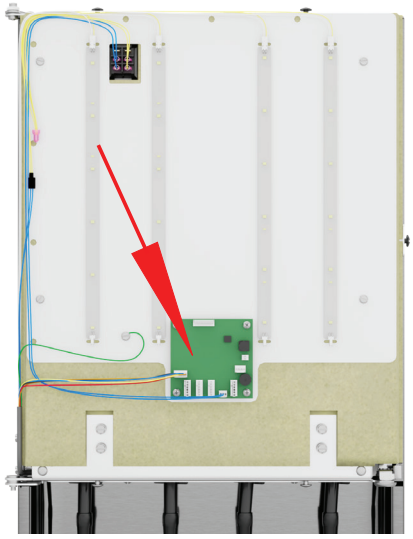

FIG. 16 AUXILIARY CONTROL BOARD

Location:
The Auxiliary Control Board is located inside the door cover mounted on the bracket.

Test Procedure:
1. Disconnect the dispenser from the power source.
2. With a voltmeter, back probe check the voltage across pins 1 & 5 of the J6 connector on the wiring harness. Connect the dispenser to the power source. The indication must be 30 volts dc.
3. Disconnect the dispenser from the power source.

If voltage is present as described, replace the board. If voltage is not present, inspect the door cable and connector for loose connection at the CBA J11 connector.

Removal and Replacement:
1. Remove the five screws securing the door cover to the door frame.
2. Carefully pull the cover forward and disconnect all switch harnesses from the connectors on the control board.
3. Remove the four #6-20 screws securing the control board to the light panel.
4. Remove the spacers from the control board and discard the old board.
5. Install the spacers on to the new control board.
6. Install new control board on the light panel using four #6-20 screws.
7. Position the door cover to the door frame and reconnect all switch harnesses to the connectors on the control board.
8. Secure the door cover to the frame with the five screws previously removed.

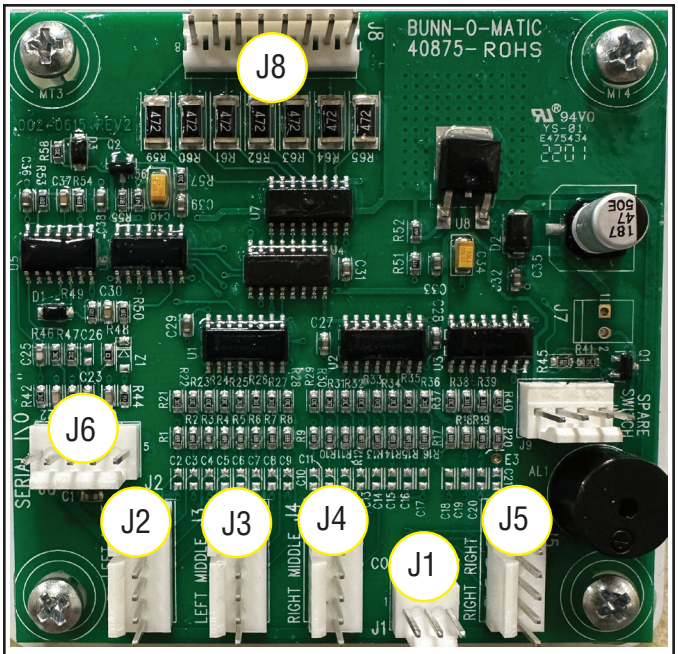

FIG. 17 CONTROL BOARD CONNECTORS

J-1	Dispense Lockout Switch
J-2	Left Handle Reed Switches
J-3	N/A
J-4	N/A
J-5	Right Handle Reed Switches
J-6	Door Harness to Main Circuit Board
J-8	Blue LED's

SERVICE (CONT.)

Circulation Pump

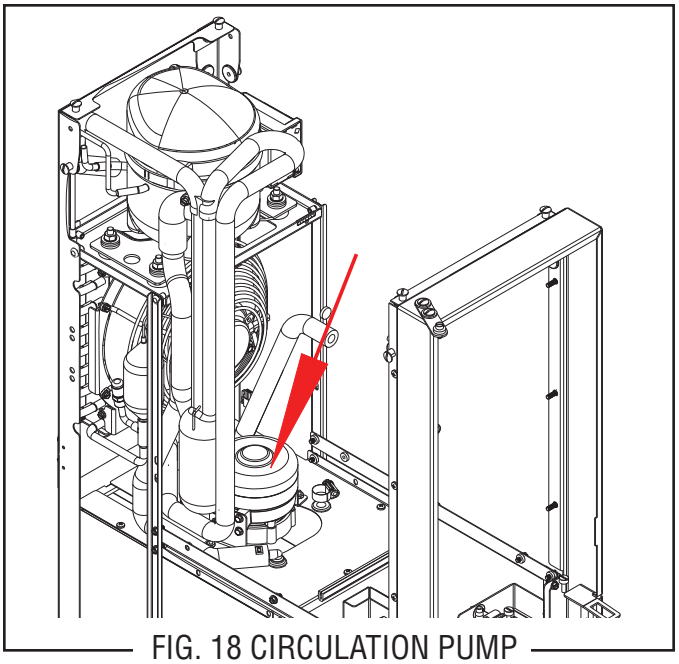

FIG. 18 CIRCULATION PUMP

Location:
The Circulation Pump is located on top of the water bath tank cover.

Test Procedure:
1. Disconnect both spade terminals at the pump.
2. With a voltmeter, place the leads across the harness side that connected to the pump. The voltage reading should be 120V ac continuously when dispenser is powered.
3. Install amp clamp around red/black wire going to the pump. Meter should display around .36 amps.
4. Visually ensure the pump is moving or circulating water.

Removal and Replacement:
1. Remove dispense platform for ease of taking out recirculating pump.
2. Remove left and right side panels.
3. Remove silicone condensation hose out of bath tank along side recirculating pump.
4. Disconnect pump motor and condenser fan wires (1/4" spade terminals).
5. Release recirculating pump holding brackets each side (4 nuts).
6. Lift up on recirculating pump and maneuver out the right side of the machine.

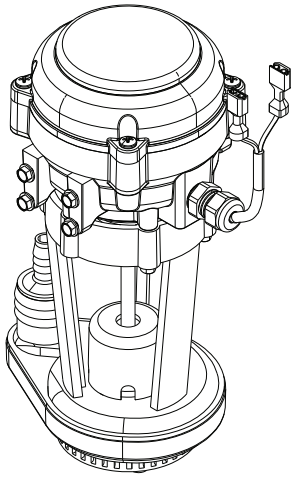

FIG. 19 CIRCULATION PUMP

Dispense On/Off Switch

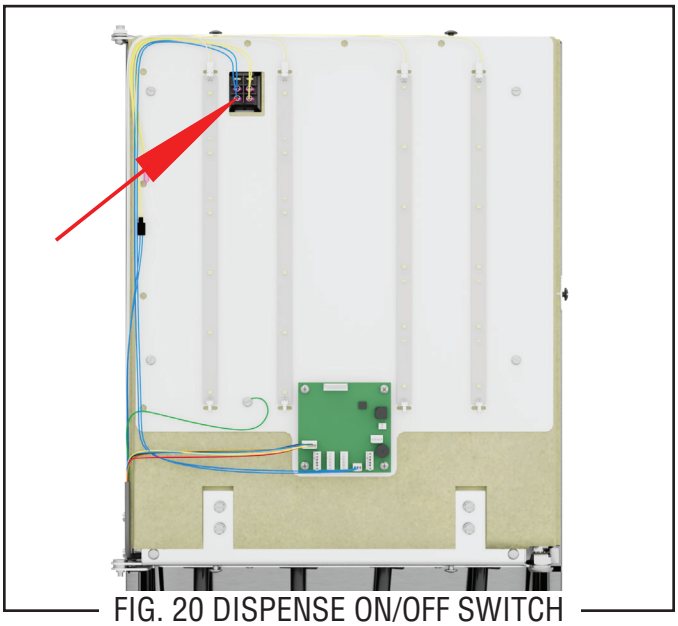

FIG. 20 DISPENSE ON/OFF SWITCH

Location:

The Dispense ON/OFF Switch is located on the rear side of the inner door, upper corner.

Test Procedure:

1. Disconnect the dispenser from the power source.
2. Disconnect all wires from the switch.
   Note: Make note of each wire going to a switch terminal.
   Yellow Wires - LED Door Lights
   Blue Wires - Dispense Lock Out/Auxiliary Control Board
3. Select the On position on the dispense switch.
4. Select continuity on voltmeter.
5. Install meter leads across the switch terminals that the Yellow wires were installed.
6. The voltmeter will show 0.00 on the display or audible tone indicating continuity across the switch terminals. Move switch to Off position, continuity should not be present.
   Repeat test for the switch terminals that the Blue wires were installed. The voltmeter will show 0.00 on the display or audible tone indicating continuity across the switch terminals. Off position selected should indicate no continuity.
7. If continuity is not present as described, replace the switch.
   If continuity is present as described, will need to verify voltage supply across the yellow wires and the blue wires. If voltage is present as indicated below, start tracing the wires backwards looking for bad connection or no power from the source.
   Yellow Wires - 30.0VDC - LED Door Lights
   Blue Wires - 5.0VDC Dispense Lock Out/Auxiliary Control

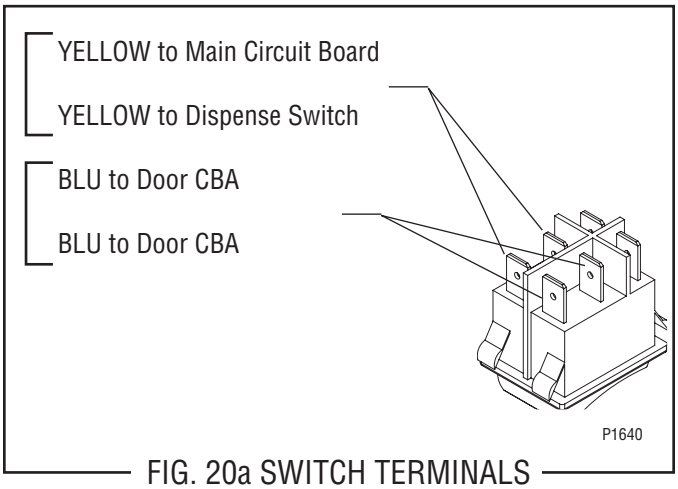

FIG. 20a SWITCH TERMINALS

Removal and Replacement:

1. Disconnect the dispenser from the power source.
2. Open dispenser door, press the locking tabs of the old switch and remove out of the door mounting bracket.
3. Disconnect the two yellow wires and two blue wires from the switch.
   Note: Make note of each wire going to a switch terminal.
4. Connect the two yellow wires and two blue wires to the new switch terminals as noted in step 3.
5. Press the new switch with wires attached into the door mounting bracket, close door.
6. Return power to the dispenser.

Dispense Pump

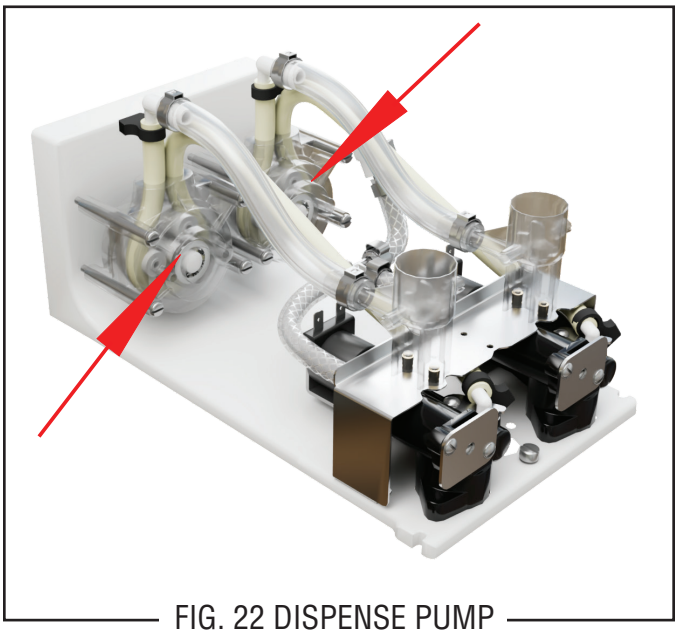

FIG. 22 DISPENSE PUMP

Location:
The Dispense Pumps are located on the platform assembly.

Removal, Inspection, and Replacement:

1. Loosen the four #8-32 x 2.45 screws securing the pump assembly to the platform.
2. Pry the two halves of the pump housing apart to reveal the pump tube and the rotor.
3. Inspect the pump tubing for signs of wear and replace every six months or as needed.
4. Inspect the pump rotor for signs of wear and replace if necessary.
5. Install the new pump tube around the rotor and position into the rear housing with the clamp resting on the top edge.
6. Install the front housing to be flush with the rear housing.
7. Position the pump assembly back on the platform and secure with four #8-32 x 2.45 screws previously removed.
8. Repeat for remaining pump.

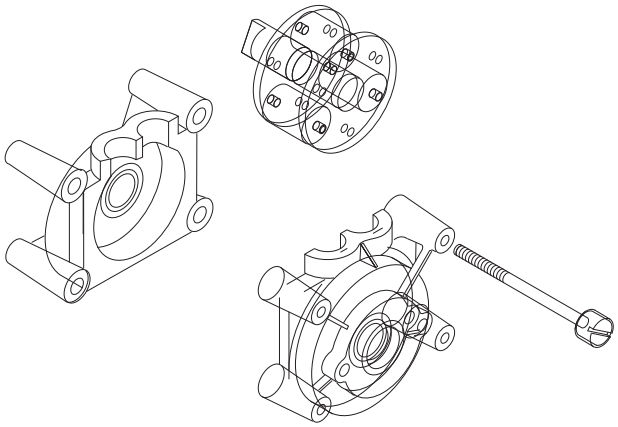

FIG. 23 DISPENSE PUMP COMPONENTS

SERVICE (CONT.)

Dispense Motor

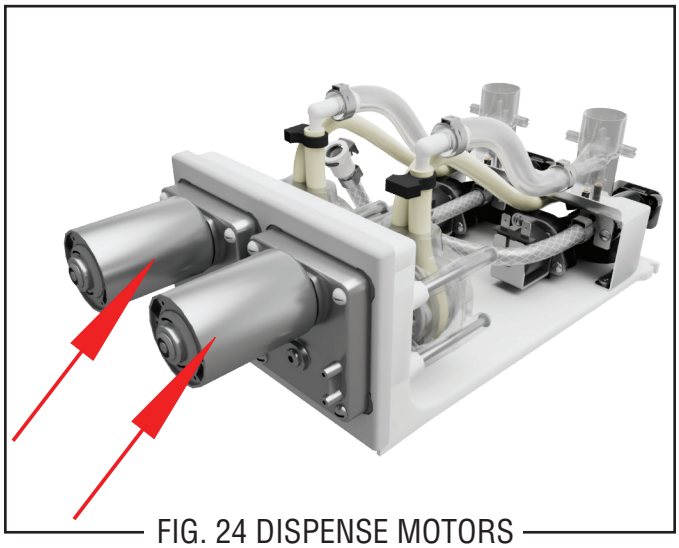

FIG. 24 DISPENSE MOTORS

Location:
The Dispense Motors are located on the rear of the platform assembly.

Test Procedure:
1. Turn main water supply off.
2. Gently move motor spade connectors to expose enough motor terminal for the voltmeter leads to be applied for DC voltage test.
2. With a voltmeter, install the red lead on the lower motor terminal and the black lead on the upper terminal. Pull the corresponding handle. A voltage reading between 9.0 to 25 volts dc should be displayed on the voltmeter. The amount of voltage is dependent upon the dispense station pot dial setting.
3. Disconnect the dispenser from the power source.

If voltage is present as described, replace the motor. If voltage is not present as described, refer to the Wiring Diagrams and check the pull and hold handle assembly with reed switch.

Removal and Replacement:
1. Disconnect the two wires from the dispense motor.
2. Loosen the four #8-32 screws securing the motor to the platform assembly and remove the motor.
3. Inspect the gasket and rubber bushings for signs of wear and replace if necessary.
4. Position the new motor into place with the gasket and bushings onto the platform. Secure with four #8-32 screws previously removed.
5. Reconnect the two wires to the motor as shown in Fig. 25.

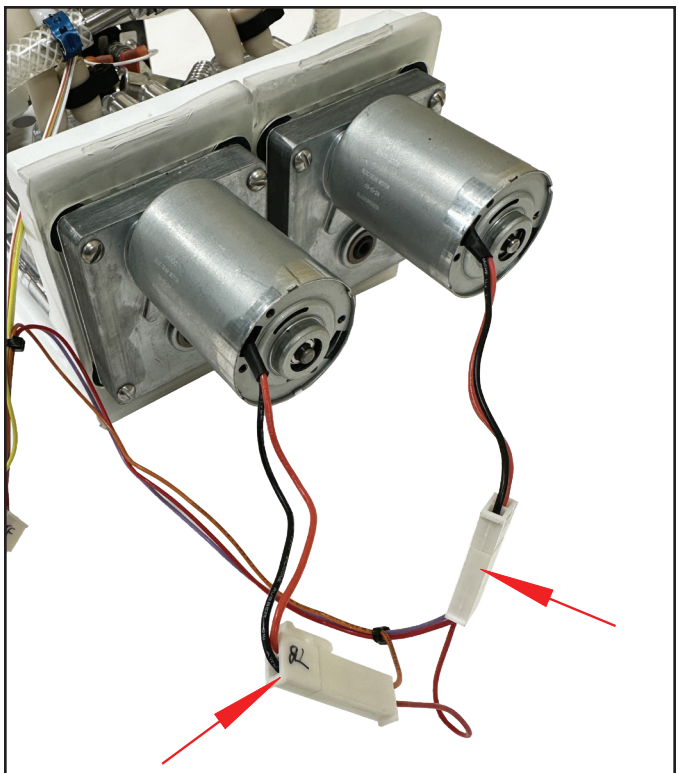

FIG. 25 DISPENSE MOTOR CONNECTORS

SERVICE (CONT.)

Dispense Valve

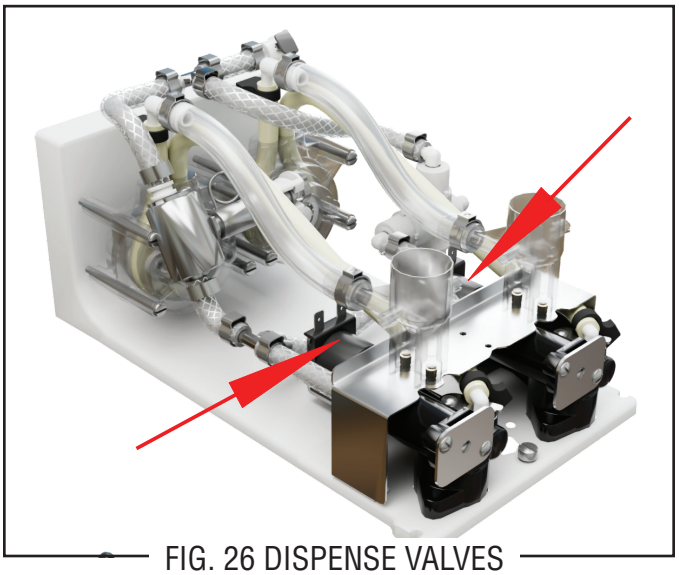

FIG. 26 DISPENSE VALVES

Location:
The Dispense Valves are located at the front of the platform assembly. The associated flow adjustment in the front of the still dispense valve is used to fine tune the water flow to approximately 1.5 ounces per second.

Test Procedure:
1. Disconnect the dispenser from the power source.
2. With a voltmeter, check the voltage across the two wire terminals of the valve solenoid. Connect the dispenser to the power source. The indication must be 24 volts dc.
3. Check coil resistance by disconnecting the wires going to the coil. Place meter leads across coil terminals, the meter display should show approximately 44.3 ohms +/_ 10% at 77°F temperature.

If readings are not as described, replace the valve.

Removal and Replacement:
1. Disconnect the two wires from the dispense valve.
2. Remove the #6-32 screw and plate securing the water manifold tube to the valve.
3. Loosen the two #6-32 screws securing the valve to the platform assembly and remove the valve.
4. Install the new valve onto the platform and secure with two #6-32 screws previously removed.
5. Inspect the o-ring on the manifold tube connector for signs of wear and replace if necessary.
6. Connect the water manifold tube to the valve and secure in place with the plate and #6-32 screw previously removed.
7. Reconnect the two wires to each valve.

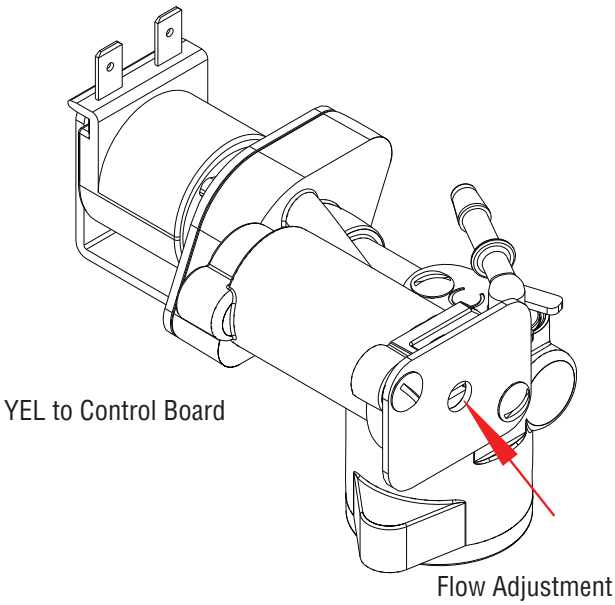

FIG. 28 DISPENSE VALVE

SERVICE (CONT.)

Dispense Handles

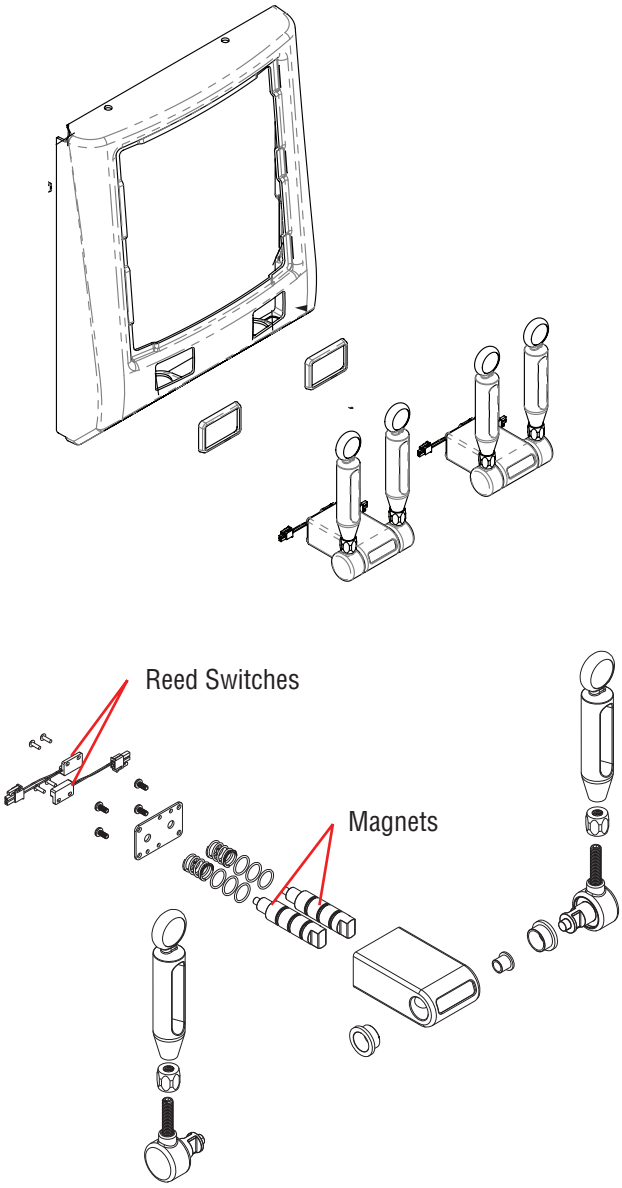

FIG. 29 DISPENSE HANDLES

Location:
The dispense handles are located on the lower outside of the dispenser door.

Test Procedure:
1. Disconnect the dispenser from the power source.
2. Remove the access plug from the bottom of the door and remove the two screws attaching the pull and hold handle assembly to the mounting bracket.
3. Disconnect the switch from the wiring harness and remove the reed switch from the block.
4. Source a magnet to test the switch contacts for closure.
5. With a voltmeter, check across the two terminals for each dispense switch. Place the magnet near the switch surface to close the switch contacts.
6. The meter will show 0.00 for continuity and when the magnet is removed, the switch should return to an open connection.

If continuity is not present with the test magnet, replace the reed switch.
If continuity is continuous without the test magnet, replace the reed switch.
If continuity is present with the test magnet, inspect the pull and hold handle internal parts for mechanical operation and magnet for corrosion.

Removal and Replacement:
1. Disconnect the dispenser from the power source.
2. Remove the access plug from the bottom of the door and remove the two screws attaching the pull and hold handle assembly to the mounting bracket.
3. Disconnect the switches from the wiring harness and remove the pull and hold handle assembly.
4. Carefully slide the new handle assembly through the gasket.
5. Connect the wires for the nitro reed switch to the connector with white and blue wires.
6. Connect the wires for the still reed switch to the connector with white and red wires.
7. Insert the handle assembly into the door opening and secure with two screws previously removed.
8. Re-install the access plug to the bottom of the door.

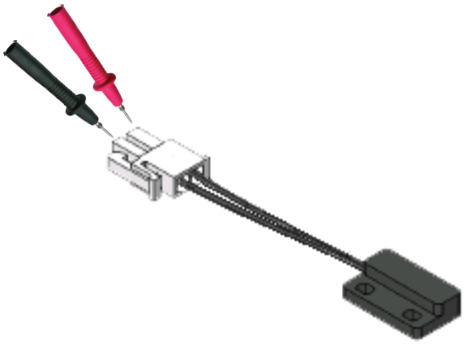

FIG. 30 DISPENSE REED SWITCH

LED Lights



FIG. 31 LED DOOR LIGHTS

Location:
The LED door lights are located inside the dispenser door.

Test Procedures:
No illumination at all: First verify that the dispense lockout switch has not been turned off!

1. Disconnect power from the dispenser.
2. Check for supply voltage (regulated +24VDC) across brown wire and white wire at the Power Supply. (FIG 32).

- If voltage is not present as described, check the wiring from power supply to the main CBA.

Removal and Replacement:

1. Disconnect power from the dispenser.
2. Remove the five #6-32 screws securing the door cover to the door.
3. Carefully lower the door cover and disconnect the door cover from the CBA.
4. Remove and discard the faulty LED board.
5. Install a new LED lights.
7. Replace the door cover and secure with the five #6-32 screws.
8. Return power to the dispenser.

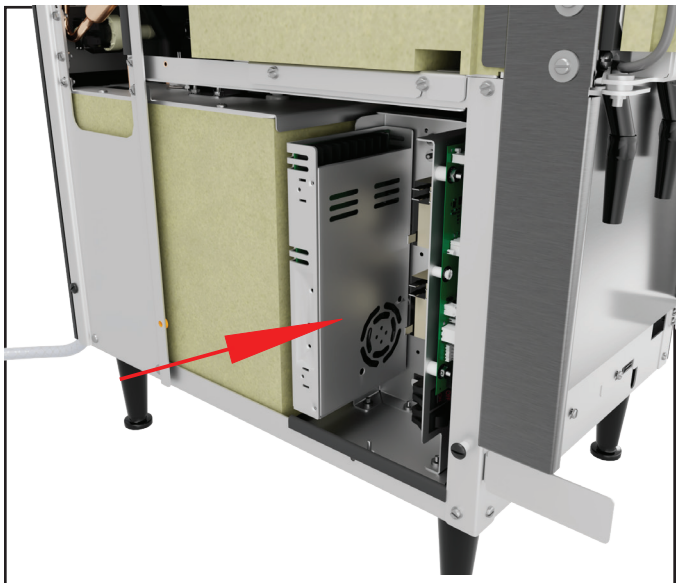

FIG. 32 POWER SUPPLY

SERVICE (CONT.)

Compressor Run Relay



FIG. 35 RELAY LOCATION

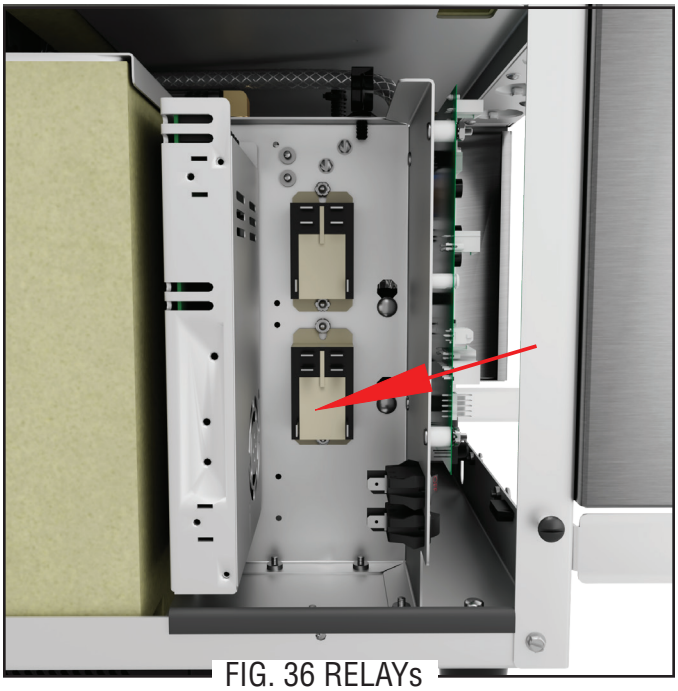

FIG. 36 RELAYs

Location:

The relay (or contactor) is located inside the dispenser chassis on the upper outside of the component bracket.

Test Procedures:

1. Disconnect the dispenser from the power source.
2. Disconnect the blue/black wire and the grey wires from relay contacts.
3. Connect the dispenser to the power source.
4. Turn on power and check for continuity across contacts on relay.

- The indication must be no continuity. Energize the relay coil, the relay contacts should close and meter will read 0.00.
- If continuity is not as described, replace the relay.

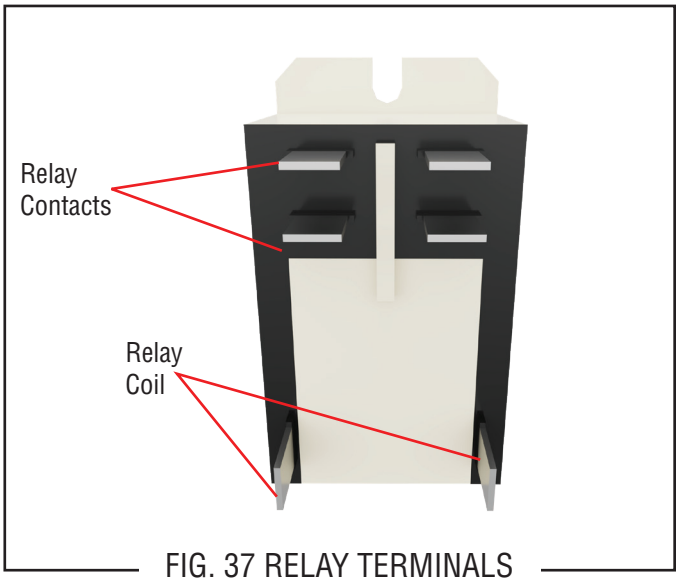

FIG. 37 RELAY TERMINALS

Removal and Replacement:

1. Take a picture before Disconnecting the wires from the relay.
2. Remove the two #8-32 locking screws securing the relay and mounting bracket to the chassis. Remove and discard relay.
3. Install the new relay to the mounting bracket and then on the chassis using two #8-32 locking screws.
4. Reconnect the wires.

SERVICE (CONT.)

Water Booster Pump Relay

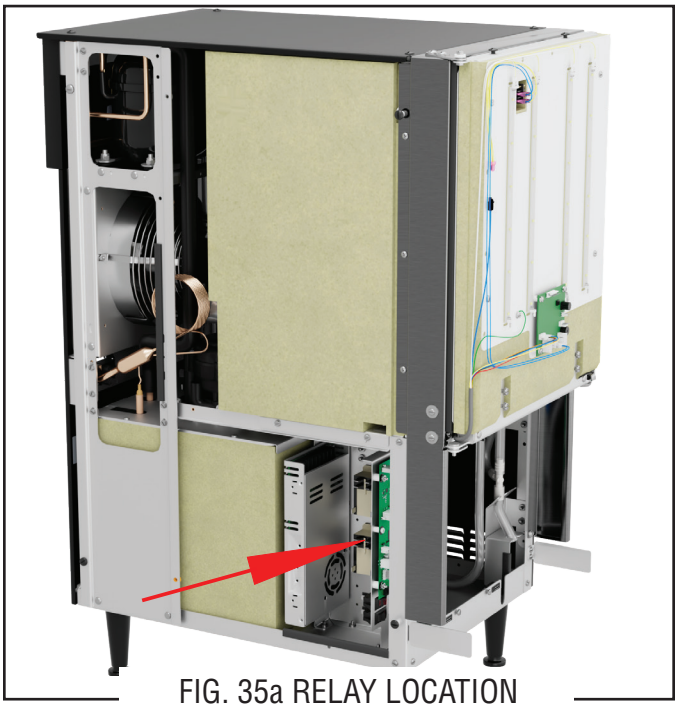

FIG. 35a RELAY LOCATION

Location:
The relay (or contactor) is located inside the dispenser chassis on the lower outside of the component bracket.

Test Procedures: Continuity or Voltage Check
The coil is supplied with 24VDC from the control board while the relay contact terminal has 24VDC.

1. Disconnect the wires going to the coil.
2. Install red meter lead into the solid blue wire spade terminal (+) and black meter lead into the white/ grey wire spade terminal (-).
3. Pull a handle, the meter display should show a voltage reading 24.0 to 30.0VDC.

The relay contact terminal is a normally open contact and will close upon 24VDC activation of the coil. Ensure wires are attached to coil terminals.

4. Disconnect and isolate the 120 VAC wires on the relay contact terminals.

Check relay contact terminals for continuity when relay coil is activated by the corresponding handle. The meter on the display should show 0.00 or audible tone.
If continuity or voltage is not present as described, replace the relay.

Removal and Replacement:
1. Take a picture before Disconnecting the wires from the relay.
2. Remove the two nuts securing the relay to the mounting bracket. Remove and discard relay.
3. Install the new relay to the mounting bracket using two nuts.
4. Reconnect the wires.

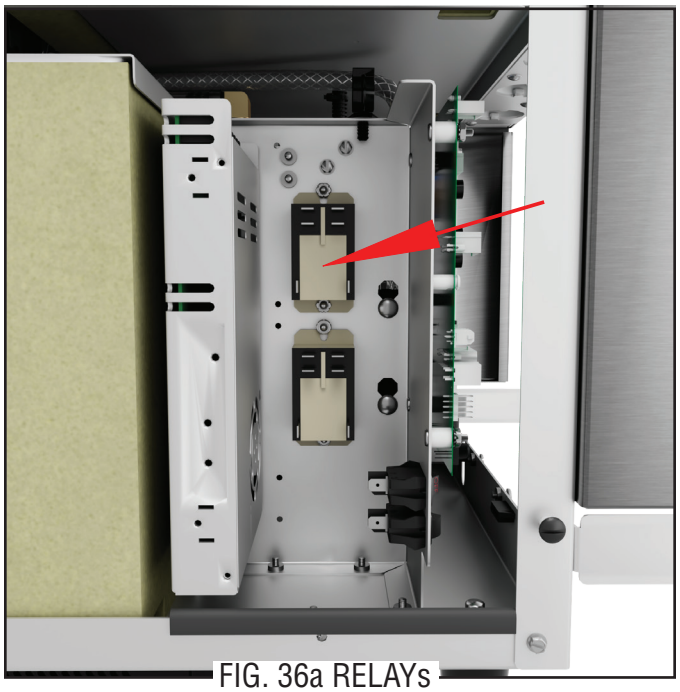

FIG. 36a RELAYs

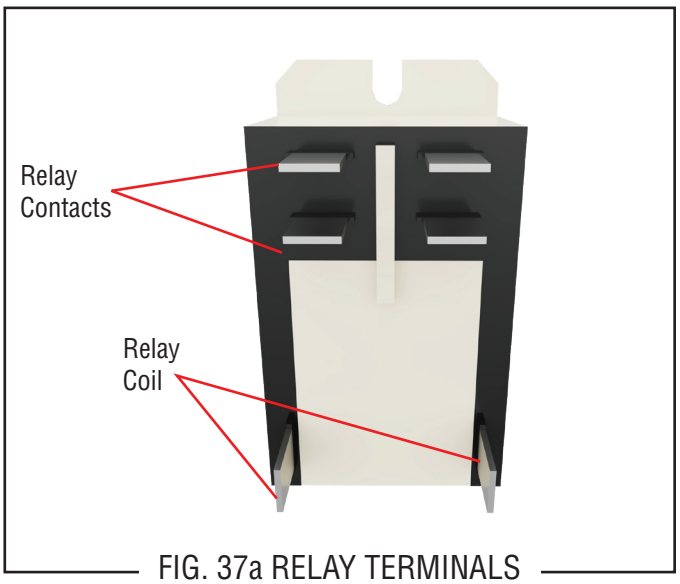

FIG. 37a RELAY TERMINALS

SERVICE (CONT.)

Water Inlet Solenoid

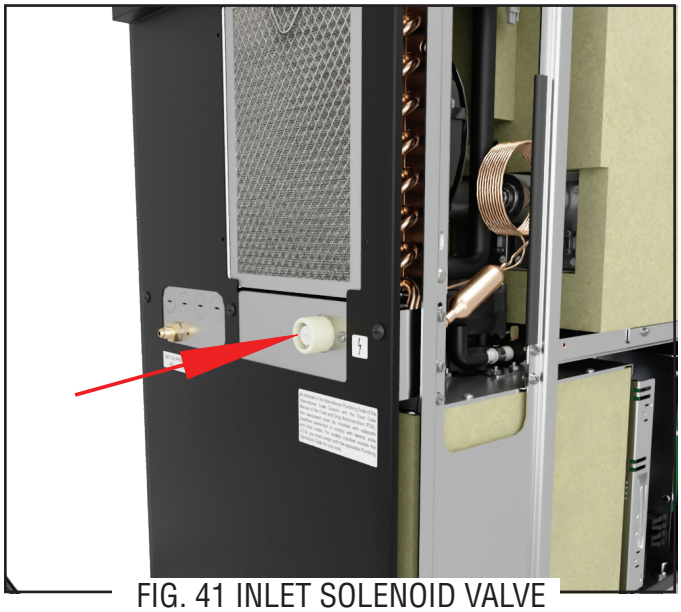

FIG. 41 INLET SOLENOID VALVE

Location:

The inlet solenoid is located inside on the rear of the dispenser base.

Test Procedures:

1. Disconnect the dispenser from the power source.
2. Disconnect the two wires from the solenoid valve.
3. Check for continuity across the solenoid valve coil terminals.

If continuity is present as described, reconnect the two wires to the solenoid.
If continuity is not present as described, replace the solenoid valve.

4. Check the solenoid valve for coil action. Connect the dispenser to the power source.
5. Initiate a dispense and listen carefully in the vicinity of the solenoid valve for a “clicking” sound as the coil magnet attracts.
5. Disconnect the dispenser from the power source.

If the sound is heard as described and water will not pass through the solenoid valve, there may be a blockage in the water line before the solenoid valve or, the solenoid valve may require inspection for wear, and removal of waterborne particles.
If the sound is not heard as described, replace the solenoid valve.

Removal and Replacement:

1. Remove the two wires from the solenoid valve.
2. Turn off the water supply to the dispenser.
3. Disconnect the water lines to and from the solenoid valve.
4. Remove the two #8-32 screws securing the solenoid to the dispenser base. Remove solenoid.
5. Install new solenoid valve on the dispenser base and secure with the two #8-32 screws.
6. Securely fasten the water lines to and from the solenoid valve.
7. Refer to Schematic Wiring Diagram when reconnecting the wires.

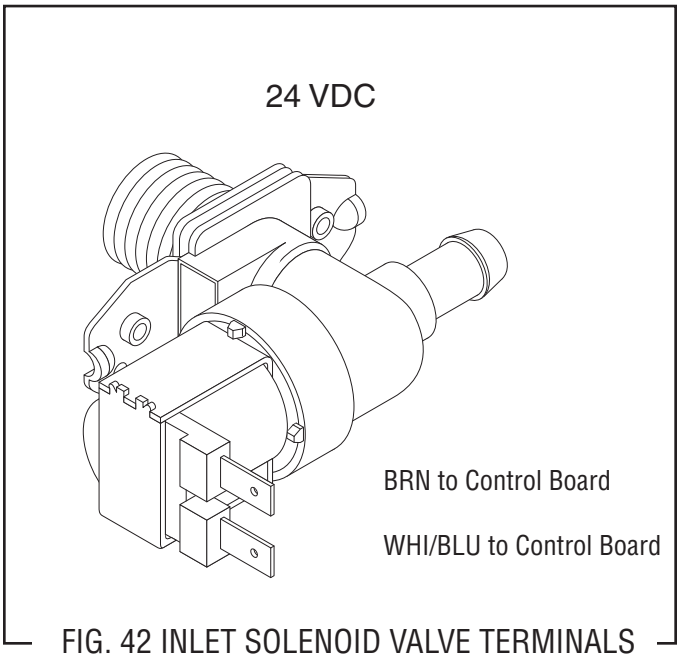

FIG. 42 INLET SOLENOID VALVE TERMINALS

Water Tank Solenoid



FIG. 43 WATER TANK SOLENOID

Location:
The Water Bath Inlet Solenoid is located behind the front Splash Panel.

Purpose:
A normally closed valve that will be electrically activated to move the internal plunger away from the outlet port to allow water flow through the valve.

Specifications:

- 24VDC, 7W
- Current Draw: 0.292 Amps
- Resistance: 88 Ohms +/-10% @ 25° C
- Directional Flow

User and/or Machine Notification Symptom:

- Initial water bath tank fill process stops due to fill time-out
- Water bath can overflow and weep out the overflow tube into the drip tray
- Water level showing unusually low in the sight gauge tube

TROUBLESHOOT

A solenoid can have a failure four different ways:

1. Defective coil
2. No incoming power to solenoid coil
3. Mineral deposits inside solenoid valve preventing plunger from sealing off the internal port 4. Mineral deposits inside solenoid valve restricting or plugging the internal port

- Use volt meter to test coil for 24.0VDC during operation
- Ensure main water supply is turned On

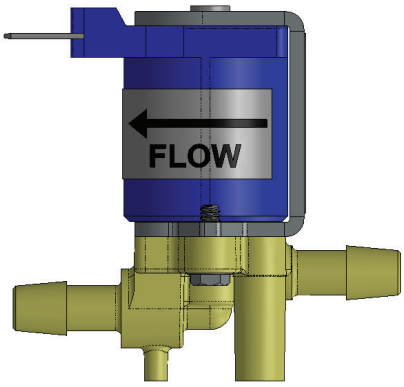

FIG. 43 WATER TANK SOLENOID

Removal and Replacement:

1. Disconnect the dispenser from the power source.
2. Turn off the water supply to the dispenser.
3. Remove the two wires from the solenoid valve.
4. Disconnect the water line from the solenoid valve.
5. Remove the #10-32 screws securing the solenoid valve to the chassis frame. Remove solenoid valve.
6. Using the #10-32 screws install new solenoid valve to the chassis frame.
7. Reconnect the water lines to solenoid valve.
8. Refer to schematic wiring diagrams when reconnecting the wires.

Water Tank Float Switch

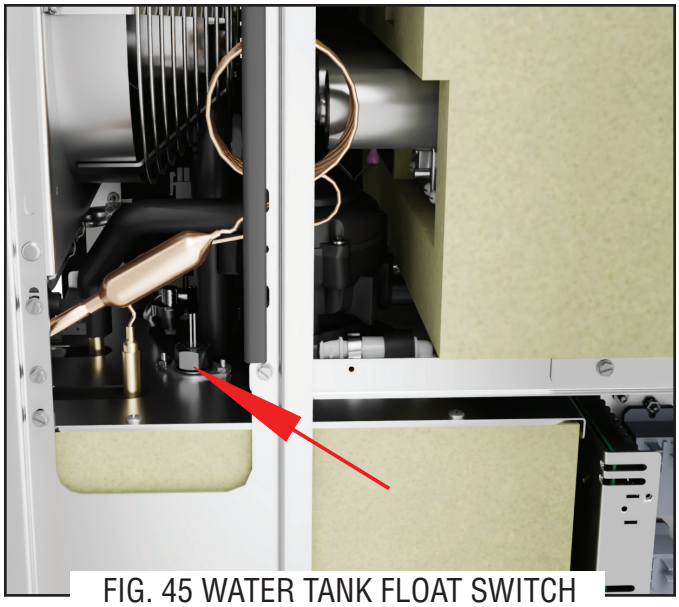

FIG. 45 WATER TANK FLOAT SWITCH

Location:
The Water Tank Float Switch is access from the left-side panel and is located in the top of the water tank lid.

Purpose:
The float switch is used to monitor and control water level in the tank. The float in down position has the internal contacts closed, up position opens the internal contacts which stops the water tank fill process when the On/Off dispense switch is in the On position.

Test Procedures:
Float down position: 0.00vdc or continuity across float contacts.
Float up position: 5.0vdc or no continuity across float contacts.

Removal and Replacement:
1. Disconnect the dispenser from the power source.
2. Turn off the water supply to the dispenser.
3. Disconnect the float switch from the main harness.
4. Remove the float switch from the tank lid.
5. Install a new float switch to the tank lid.
6. Reconnect the float switch to the main harness.
7. Reconnect the water lines to solenoid valve.
8. Restore power to the dispenser.



FIG. 46 SWITCH TERMINALS

Temperature Probe
(Also known as Water Bath Thermistor)

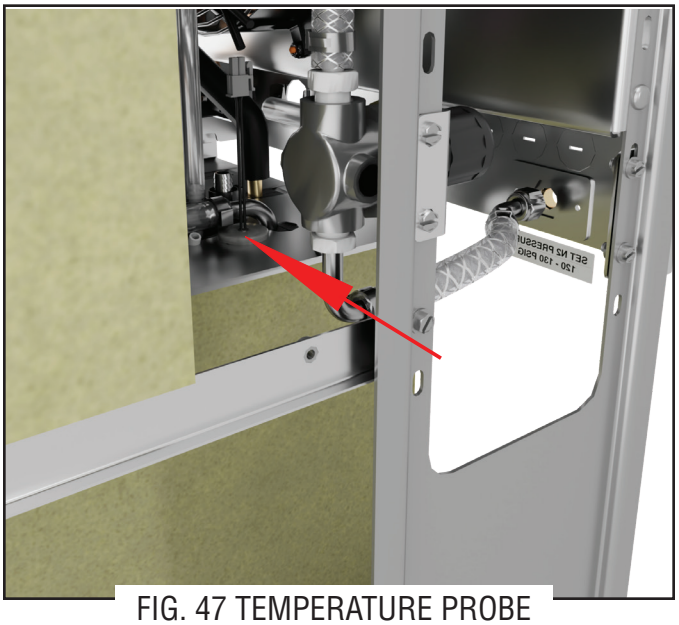

FIG. 47 TEMPERATURE PROBE

Location:
The temperature probe is accessed through the right-side panel and is located on the top of the tank assembly.

Purpose:
A thermistor (NTC) is a type of resistor which resistance is dependent on temperature. The temperature sensor will become cool and embedded in the ice block, the resistance will increase to the shut off point of the software parameter. When the water temperature starts rising in temperature, the thermistor resistance starts decreasing which tells the control board to activate the refrigeration circuit.

Test Procedure:
Disconnect temperature probe from J9 on control board and place the temperature sensor in a cup of ice water for a few minutes before checking the resistance across the two terminals of the temperature probe while in the cup of ice water (32° F). The resistance should be within 31280.00 to 34022.00 Ohms @ 32° F.

If resistance is not to specification, replace the temperature probe.

Removal and Replacement:
1. Disconnect the dispenser from the power source.
2. Remove the top rear cover.
3. Disconnect the two pin connector from the dispenser main wiring harness.
4. Remove the temperature probe by firmly pulling-up on the tube at the tank lid.
5. Slide a new grommet on to the new temperature probe.
6. Insert the temperature probe through the hole in the tank lid and slide down fully.
7. Reconnect the two pin connector to the dispenser main wiring harness.

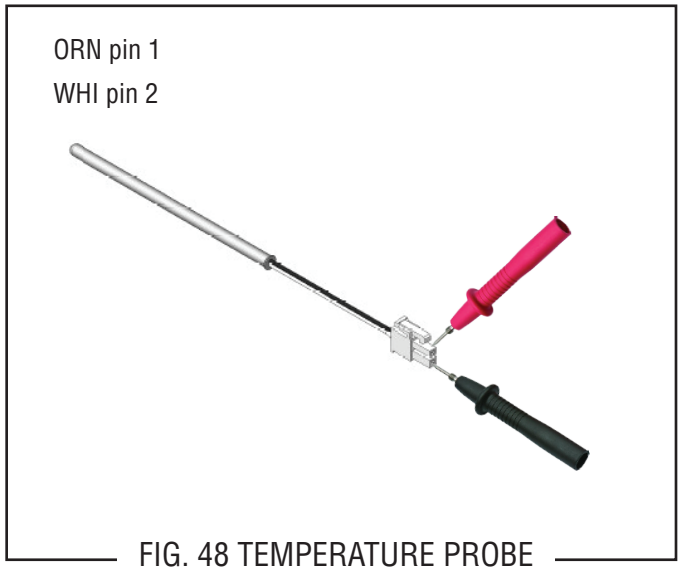

FIG. 48 TEMPERATURE PROBE

TEMP	RESISTANCE	VOLTAGE
SHORTED	0 Ω	0VDC
32° F 0.0° C	31.2k - 34k Ω	3.3VDC
77° F 25.0° C	9.8k - 10.2k Ω	1.5VDC
OPEN	INFINITE	5.0VDC

NOTE: ALL FIGURES LISTED ABOVE ARE APPROXIMATE.

Temperature Sensor

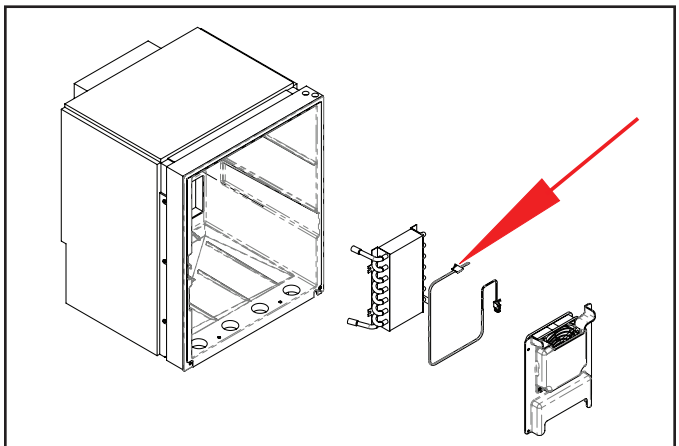

FIG. 49 TEMPERATURE SENSOR

Location:
The Temperature Sensor is located inside the cabinet between the fan and the water coil.

Test Procedures:
1. Remove the left side housing panel.
2. Connect a voltmeter across the two leads of the temperature sensor (leave plug connected);
   The indication must be:
   a) Approx. 1.4 vdc @ 71° F
   b) Approx. 2.6 vdc @ 32° F

If voltage reading is 0v, the Control Board is not supplying the necessary 5v and should be replaced. If the reading stays at 5vdc, replace sensor.

Alternate Test:
2. Disconnect the plug on sensor leads and check resistance as indicated in chart.

If resistance reading is not within the range listed in chart, replace sensor.

Removal and Replacement:
1. Remove the left side housing panel.
2. Disconnect the plug on the temperature sensor leads from the connector on the dispenser main harness.
3. Open the cabinet door and remove the product containers.
4. Remove the cabinet fan and fan guard assembly.
5. Clip off the connector and pull the temperature sensor from the top left rear of the cabinet and discard.
6. Push new temperature sensor wires into the grommet at the top left rear of the cabinet and secure to sensor mounting clip.
7. Refer to Fig. 50 and connect the wires to the new plug.
8. Connect the sensor plug to the connector from the main harness.
9. Reinstall the cabinet fan and guard assembly.
10. Reinstall the left side housing panel.

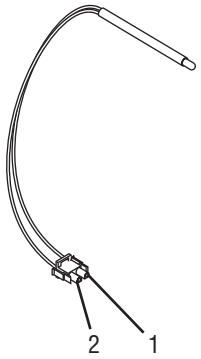

1. BLK to GRY J7-1 (Control Board) Positive
2. BLK to WHI/GRY J7-2 (Control Board) Negative

FIG. 50 TEMPERATURE SENSOR

TEMP	RESISTANCE	VOLTAGE
SHORTED	0 Ω	0VDC
32° F 0° C	5532k Ω 5758k Ω	2.5VDC
77° F 25.0° C	2k Ω	3.3VDC
OPEN	INFINITE	5.0VDC

NOTE: ALL FIGURES LISTED ABOVE ARE APPROXIMATE.

Power Supply

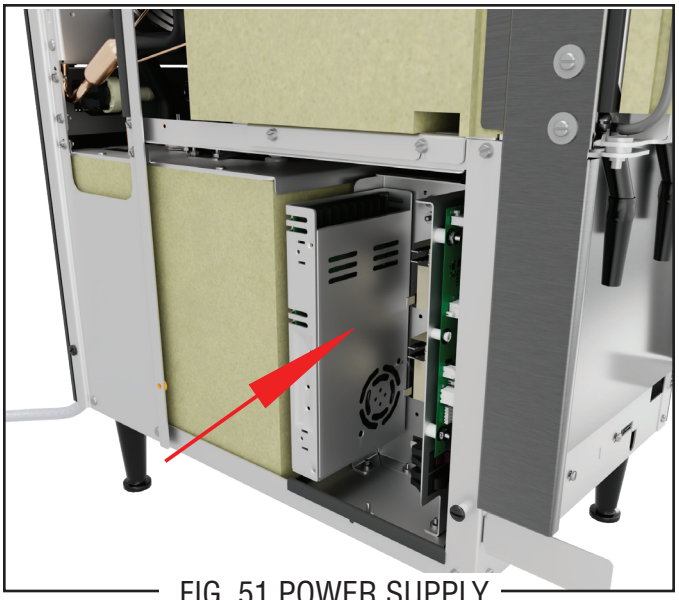

FIG. 51 POWER SUPPLY

Location:

The power supply is located inside the dispenser chassis on the lower outside of the component bracket.

Test Procedure:

1. Disconnect the dispenser from the power source.
2. Check the voltage across black wire and the white wire from the main harness. Connect the dispenser to power source. The indication must be 120VAC.
4. Disconnect the dispenser from the power source.

If voltage is present as described, proceed to #5.
If voltage is not present as described, refer to the Wiring Diagrams and check the main wiring harness.

5. Check the voltage between J6-1 and J6-3 at the control board. Connect the dispenser to the power source. The indication must be 24VDC.

If voltage is present as described the power supply is operating properly.
If voltage is not present as described, replace the power supply.

Removal and Replacement:

1. Power off the dispenser
2. Remove the left and front splash panel.
3. Loosen the two screws securing the power supply to the component bracket.
4. Lift the power supply slightly off of the bracket and pull out of the left-side of the dispenser.
5. Disconnect the wiring. Taking a picture of the current wiring configuration is recommended.
6. Discard the power supply.
7. Install new power supply on the component bracket and secure with two screws.
8. Refer to Fig. 52 and connect the power supply to the main wiring harness.
9. Install the left and front splash panel.

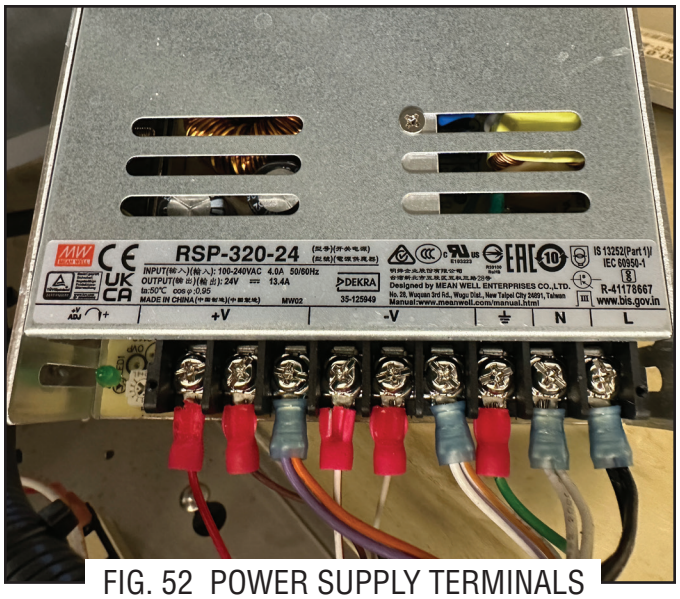

FIG. 52 POWER SUPPLY TERMINALS

Dispense Water Booster Pump

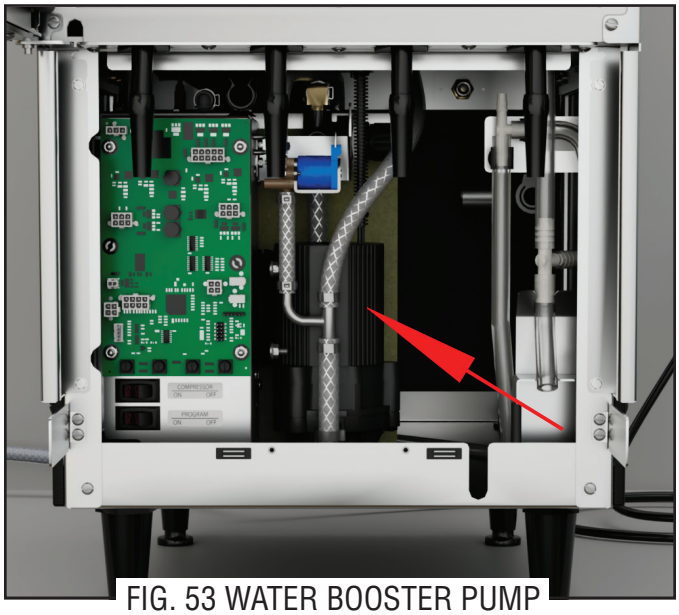

FIG. 53 WATER BOOSTER PUMP

Location:
The Water Booster Pump is located inside the lower chassis between the circuit board mounting bracket and the water bath tank.

Test Procedures:
Install red meter lead into terminal 1 and black meter lead into terminal 2 of the harness pump connector. Pull a handle to activate the dispense pump. The reading on the meter display should indicate 24VDC reading.

No voltage - Check corresponding dispense pump relay.
Yes voltage - replace booster water pump.

Removal and Replacement:
1. Disconnect dispenser from the power source.
2. Shut off water supply.
3. Remove the right side housing panel.
4. Disconnect the plug on the booster pump leads from the connector on the dispenser main harness.
5. Disconnect the water lines from the booster pump.
6. Loosen the four nuts securing the pump to the mounting bracket and lift to remove.
7. Install the new booster pump to the mounting bracket and secure with new hardware supplied with the replacement booster pump.
8. Reconnect the water lines to the booster pump.
9. Connect the pump harness plug to the connector on the main harness.
10. Reinstall the right side housing panel.
11. Turn on water supply to the dispenser.

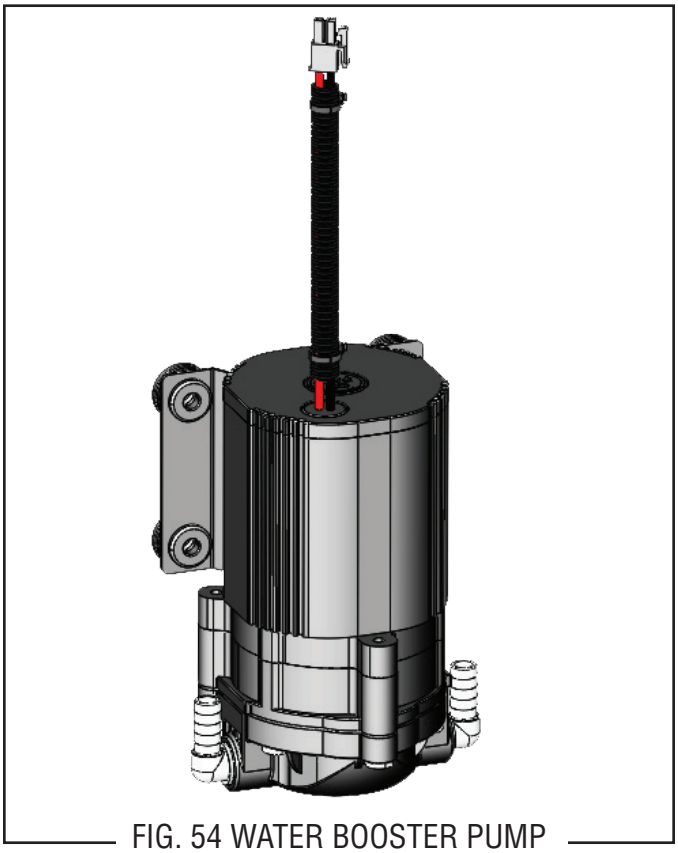

FIG. 54 WATER BOOSTER PUMP

Water Pressure Regulator

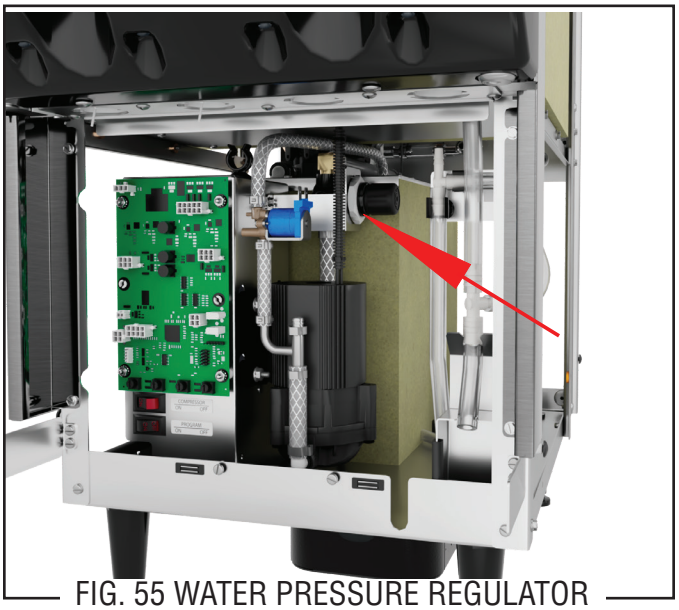

FIG. 55 WATER PRESSURE REGULATOR

Location:
The Water Pressure Regulator is located under the cabinet through the front splash panel.

Test Procedures:
Remove pressure regulator from dispenser. Attach a water line to the incoming side and a test pressure gauge assembly on the outlet side. Place water outlet into an empty bucket and turn on water supply. Unlock the adjustment knob and rotate knob while watching the pressure gauge for increase or decrease in water pressure. If the water pressure or water flow doesn't change, replace the regulator.

Removal and Replacement:
1. Disconnect dispenser from the power source.
2. Shut off water supply to the dispenser.
3. Remove the right side housing panel.
4. Disconnect the water lines to and from the regulator.
6. Install the new regulator and attach water lines previously removed.
7. Reconnect the water supply to the dispenser.
8. Check for leaks and correct if necessary.
9. Reinstall the right side housing panel.
10. Connect power to the dispenser.

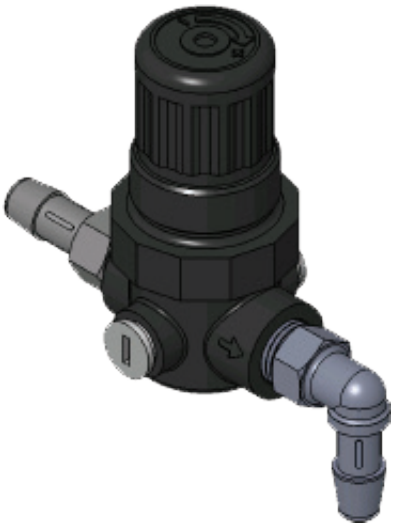

FIG. 56 WATER PRESSURE REGULATOR

Nitrogenator Assembly

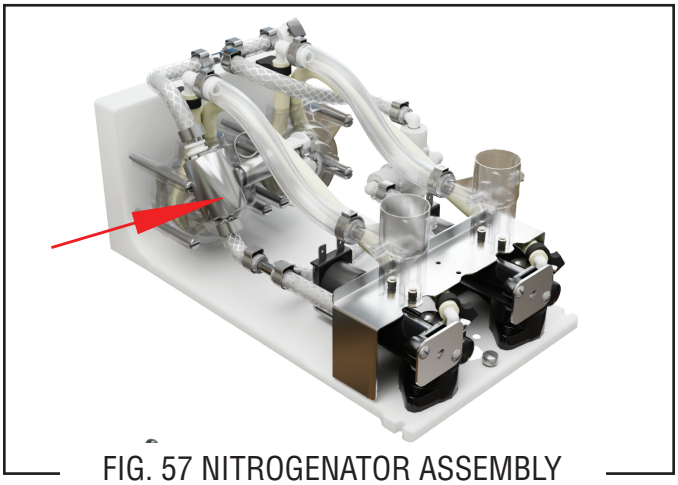

FIG. 57 NITROGENATOR ASSEMBLY

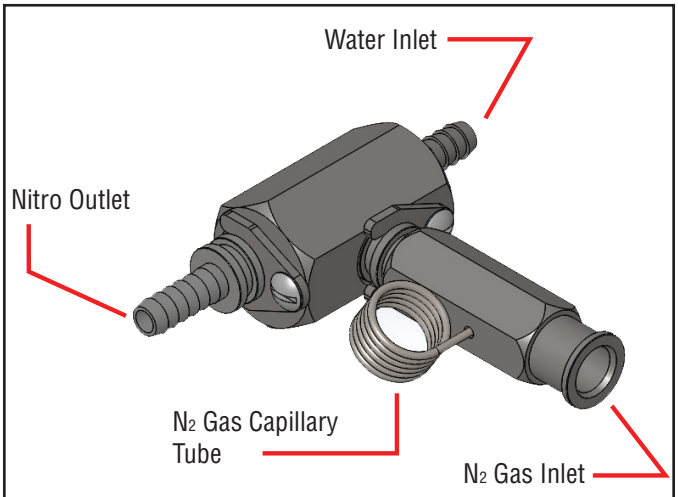

FIG. 58 NITROGENATOR ASSEMBLY

Location:
The Nitrogenator is located inside the cabinet on the platform assembly.

Test Procedures:
If you experience weak or erratic water delivery out the Nitro dispense nozzle or there is no cascading of the Nitro Coffee beverage, check for obstructions within the Nitrogenator, specifically the check valves.

Remove and clear obstructions.
Remove Nitrogenator and check with external air or water source by installing valve in reverse flow. A device with good check valves should not allow air or water to flow in reverse direction.

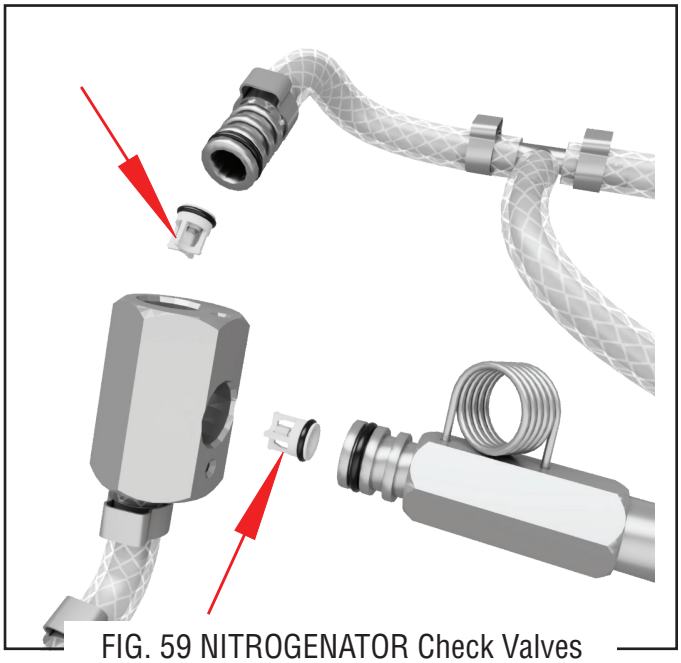

FIG. 59 NITROGENATOR Check Valves

Removal and Replacement:

1. Disconnect dispenser from the power source.
2. Shut off water supply to the dispenser.
3. Shut off nitrogen supply to the dispenser.
4. Remove the right side housing panel.
5. Disconnect the water lines and nitrogen supply to the Nitrogenator assembly.
6. To remove check valves, remove both slotted screws on the Nitrogenator, then remove holding plate and lines from the device.
7. Install the new check valves and attach water line and nitrogen line previously removed.
7. Reconnect the water supply to the dispenser.
8. Reconnect nitrogen supply to the dispenser.
8. Check for leaks and correct if necessary.
9. Reinstall the right side housing panel.
10. Connect power to the dispenser.

Nitrogen Pressure Regulator

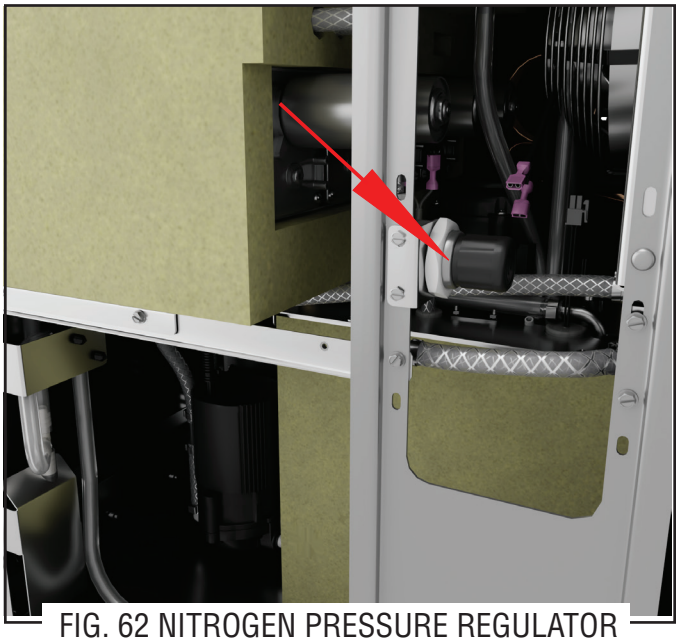

FIG. 62 NITROGEN PRESSURE REGULATOR

Location:
The Nitrogen Pressure Regulator is located behind the cabinet on the right rear side of the chassis.

Test Procedures:
Note: Create a nitrogen test gauge that can connect to a female quick disconnect fitting. See Fig 63.
Check N2 supply tank is adequately full before performing test. Turn off N2 supply and relieve pressure by pulling on the corresponding handle to open the dispense valve. Disconnect the gas infusion manifold at the quick disconnect fitting. Connect the test gauge and turn N2 supply back on. The pressure reading should be at 90psig.

Removal and Replacement:
1. Disconnect dispenser from the power source.
2. Shut off water supply to the dispenser.
3. Shut off nitrogen supply to the dispenser.
4. Remove the right side housing panel.
5. Disconnect the water lines and nitrogen supply to the Nitrogenator assembly.
6. Disassemble the nitrogenator to test check valves.
7. Install the new nitrogenator and attach water line and nitrogen line previously removed.
7. Reconnect the water supply to the dispenser.
8. Reconnect nitrogen supply to the dispenser.
8. Check for leaks and correct if necessary.
9. Reinstall the right side housing panel.
10. Connect power to the dispenser.

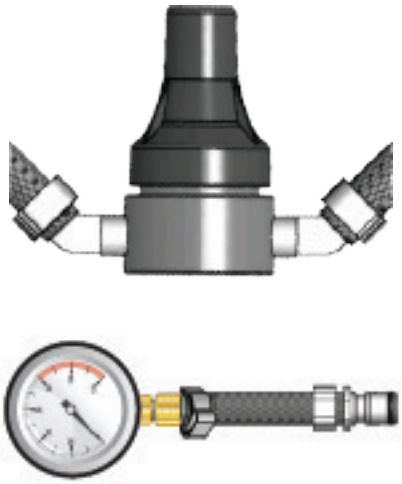

Nitrogen Test Gauge

FIG. 63 NITROGEN PRESSURE REGULATOR

Nitro Stout Insert

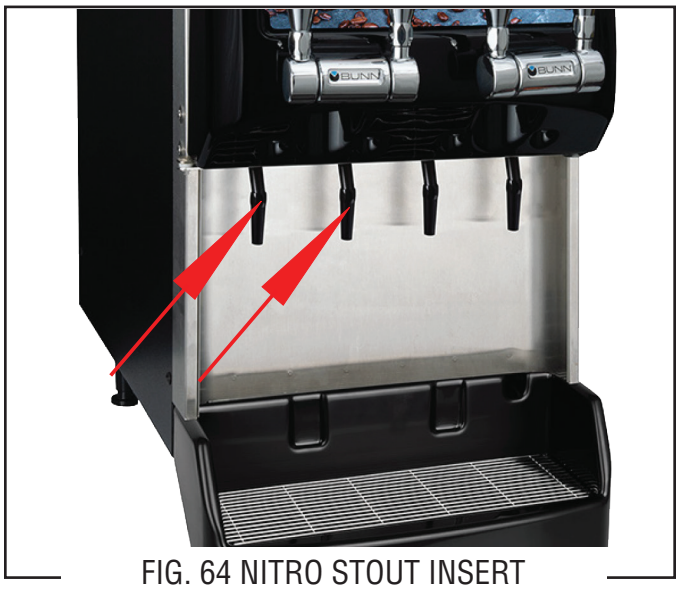

FIG. 64 NITRO STOUT INSERT

Location:
The Nitro Stout Insert is located inside the two left dispense nozzles.

Test Procedures:
Inspect & Clean
Remove Nitro nozzle from the dispense station. Locate the insert inside the nozzle and gently remove insert. Inspect the inner diameter of all five holes for product residue. Clean and clear the residue from the holes. Ensure all holes appear the same diameter size before installing insert back into a clean Nitro nozzle.

Removal and Replacement:
1. Remove the nitro dispense nozzle.
2. Remove the nitro stout insert from the dispense nozzle.
3. Check for obstructions and clean if necessary.
4. Reinstall the nitro stout insert into the dispense nozzle.
5. Reinstall the nitro dispense nozzle.

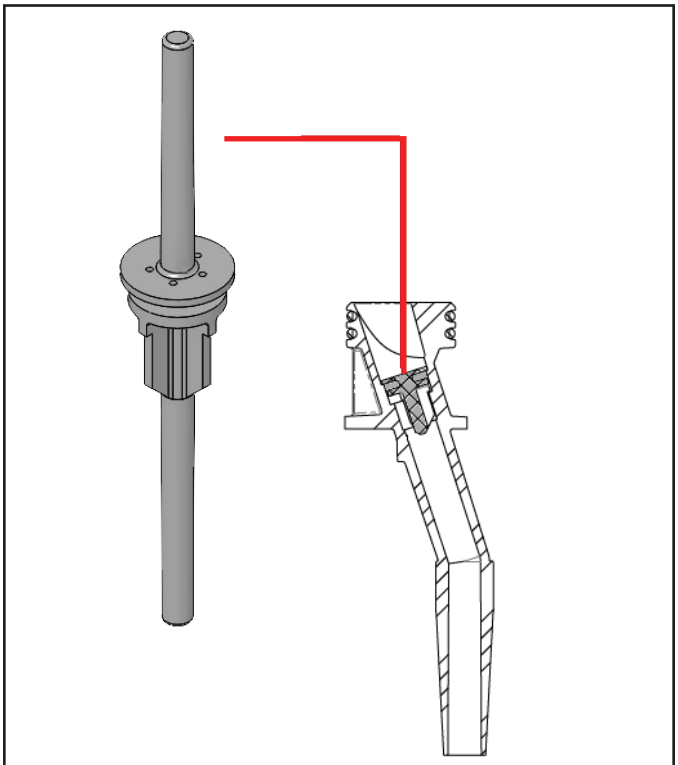

FIG. 65 NITRO STOUT INSERT

Triac Map

1. Compressor Relay Q25
2. Not Used
3. Not Used
4. Not Used
5. Not Used
6. Not Used
7. Not Used
8. Not Used
9. Not Used Q11
10. Inlet Water Valve Q10
11. Not Used

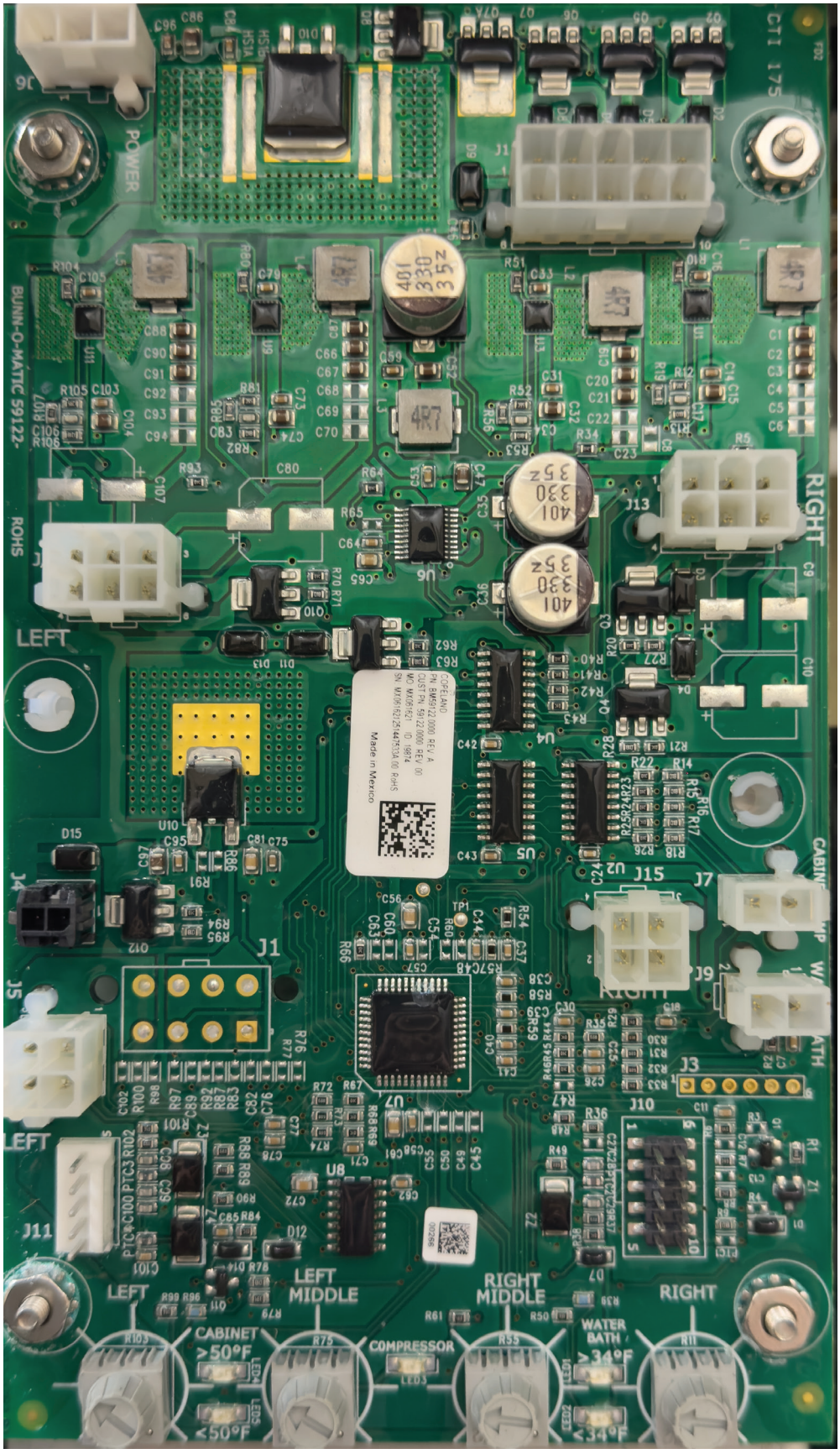

SCHEMATIC WIRING DIAGRAM

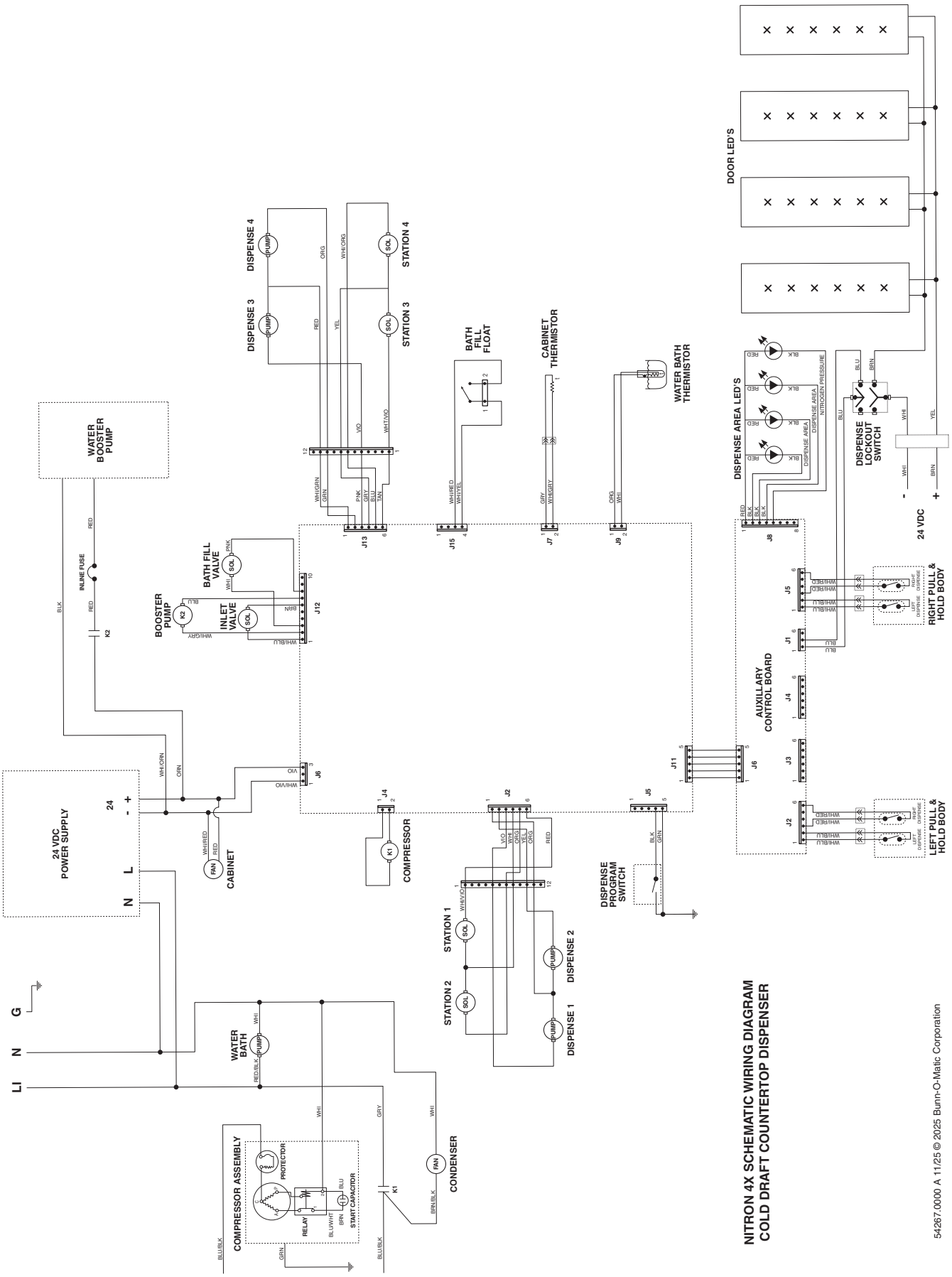


BUNN
Quality Since 1840