ASHEN DINING TABLE, 180cm

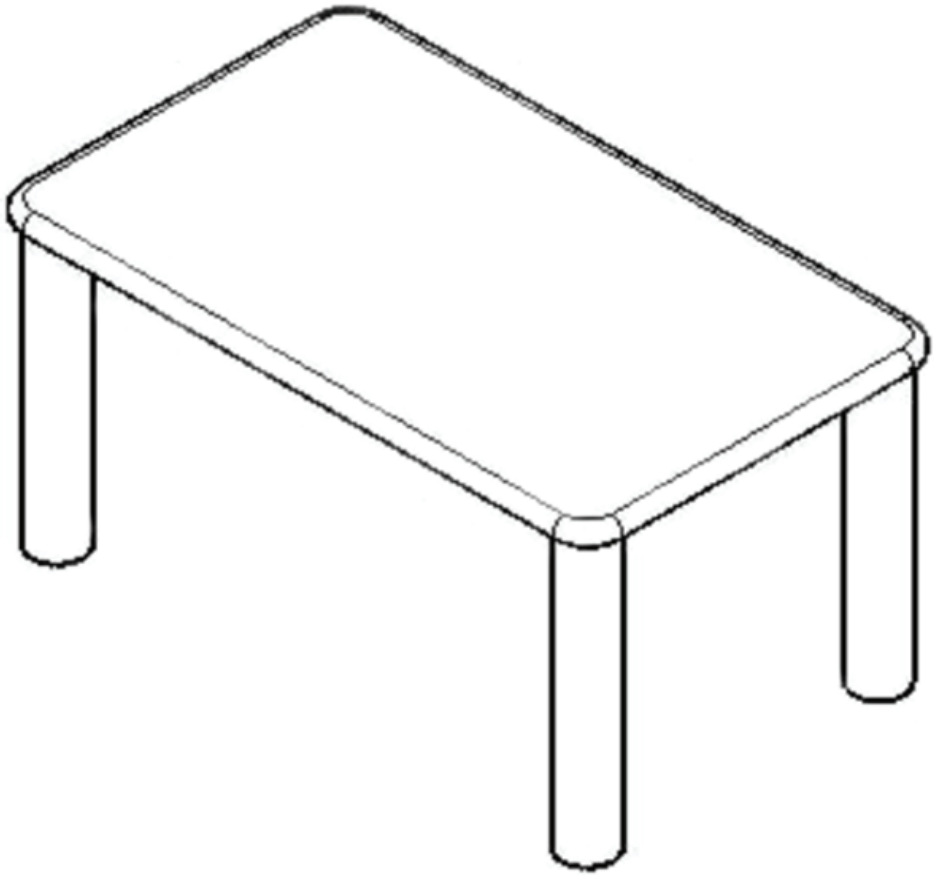

Assembly Instructions & Care Guide

CASTLERY

Hello there.

We're so glad that our Castlery product has found a home with you. As proud makers of modern, quality furniture, we’re confident that you will love and enjoy your purchase.

Setting it up is easy. Read on for a step-by-step guide to have your item assembled and ready for use.

Once you’re done, consider sharing a photo on social media or leaving us a review. We’d love to see how you've styled it in your space.

Thank you for being part of the Castlery community!

Contact us.

Should you have any questions or concerns regarding your purchase, you can contact us via **www.castlery.com/contact-us.**

www.castlery.com

Before you start...

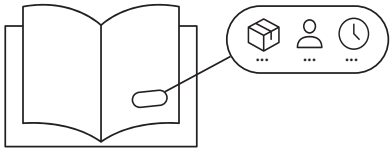

Check that you have received all cartons and familiarize yourself with the assembly requirements. This includes setting aside the allocated time required and having someone to assist you, if needed.

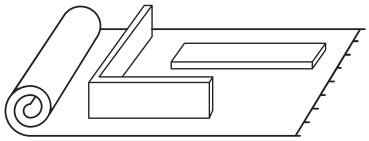

Ensure enough space for assembly. We recommend protecting your floor with a mat or cardboard to avoid scratches during the assembly process.

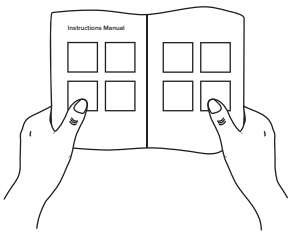

Read instructions carefully, and check that no parts are missing.

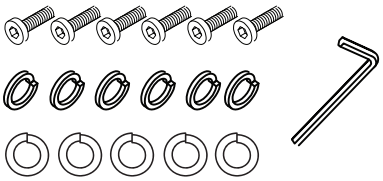

Lay out all hardware on a soft surface so you can easily identify them.

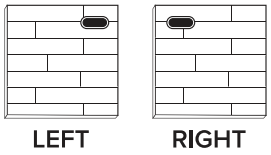

Carefully identify all components to differentiate which pieces are left and right.

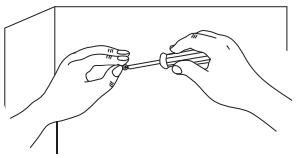

Carefully install your new product following the instructions stated. Don't skip ahead!

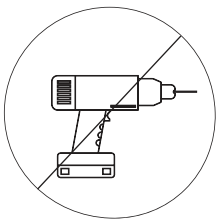

DO NOT over-tighten screws or use a drill.
Only professional assemblers should use a drill.

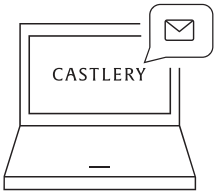

If you need further assistance, please contact us via **www.castlery.com/contact-us**.

Overview

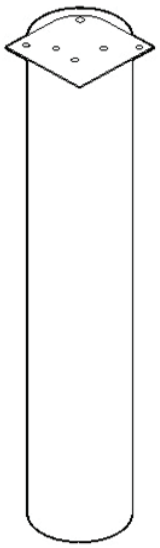

B Legs
x4

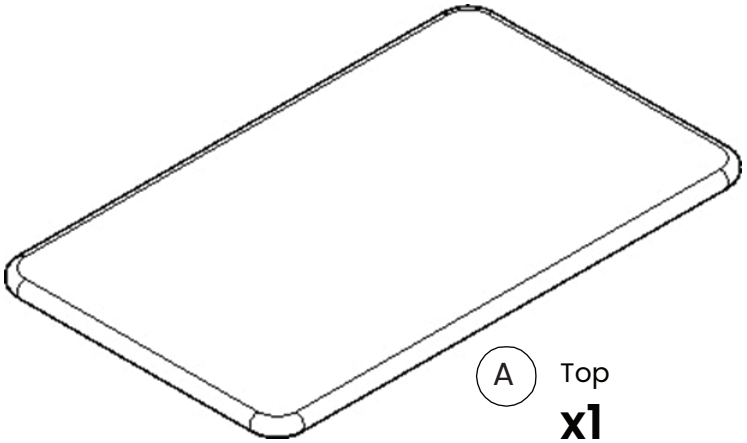

A Top
x1

Batch code label is located the underneath of table top

x2 **x2** **20 mins**

IMPORTANT: 2 persons needed for assembly.
This will help to minimize potential damage to the product or injury to persons during assembly.

There are inner box(es) that include components required to complete this assembly.

Please do not completely tighten all the hardware, until each assembly step is complete.

Before discarding the packaging, please use the checklist to ensure that you have all the parts required to assemble your product. Please kindly note if applicable please keep the original package when you want to return the product later.

If parts are missing or damaged, we will gladly ship your replacements parts free of charge. Please contact us via **www.castlery.com/contact-us.** Illustrations in this guide are for reference only and may be slightly different from the actual object.

Hardware

☐  Ⓐ Allen Key 5mm **x1**

☐  Ⓑ Bolt M8*30mm **x16**

☐  Ⓒ Spring Washer **x16**

**You might need a screwdriver (+/-) to complete this assembly.*

Step 1

This step requires 2 people.

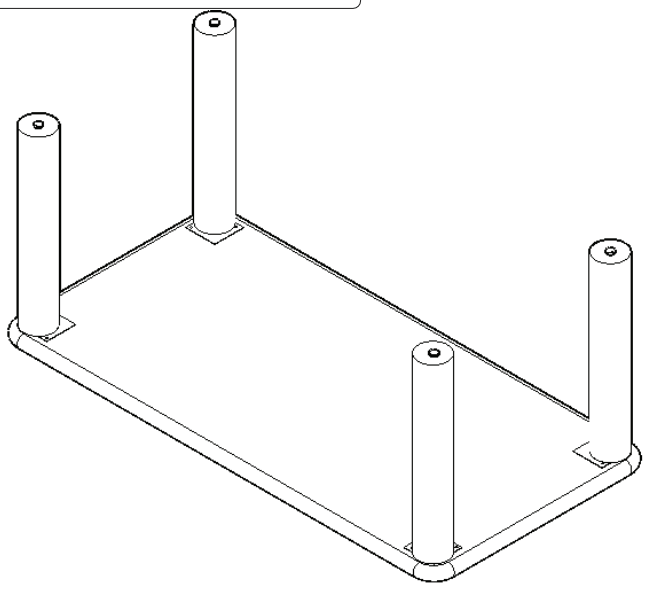

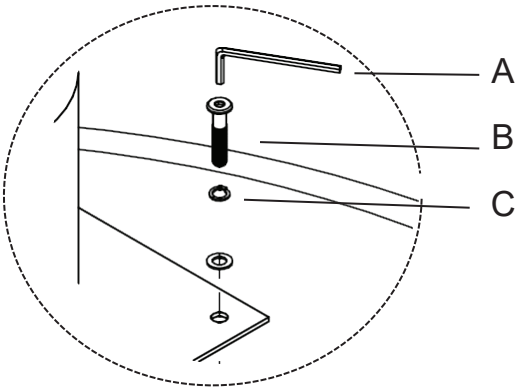

Hardware

x4

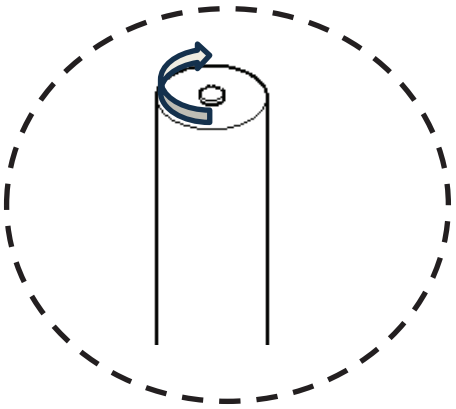

Leg Leveller

x4

Do not tighten any bolts until all bolts are installed.

Finished!

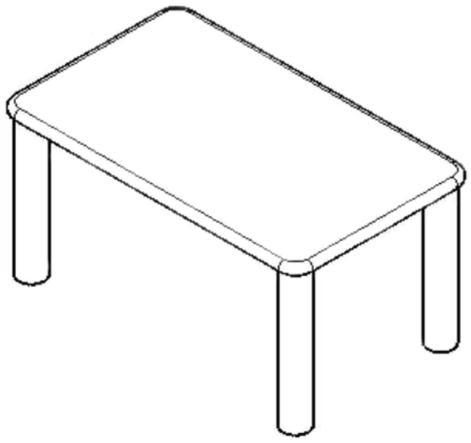

Congratulations, we're almost there!
<u>Please perform the following checks:</u>

1. Have you tightened all the screws ?

2. Please adjust the leveller or hinge as per the following instructions.

Always lift your Castlery product when moving it to your preferred location. Levelers (if any) may slant if you drag your product.

Finally, clean the product with a clean cloth.

You're all set! Enjoy your new living space, thanks to the addition of your Castlery product.

Note: Your actual product may have minor size differences due to manual measurements.

Care Instructions

Your furniture, if treated with respect and love, will last you a long time. Each piece requires light maintenance to maximize its longevity.

General Care

- Dust with a soft, dry cloth and clean with a slightly damp cloth.
- Avoid abrasive cleaners & placing rough or sharp objects on the surface.
- Keep furniture away from direct heat or sunlight.
- Wipe spills immediately.
- Use coasters or placemats whenever possible,to prevent discoloration of the surface.
- Lift when moving, do not drag.
- Periodically check that all connections are tightly-secured.

Follow the care instructions and look after your furniture. In return, your furniture will look after you. For more information on our care instructions, visit our product website at www.castlery.com.

We hope to see you soon!