CALLIE CORNER BANQUETTE

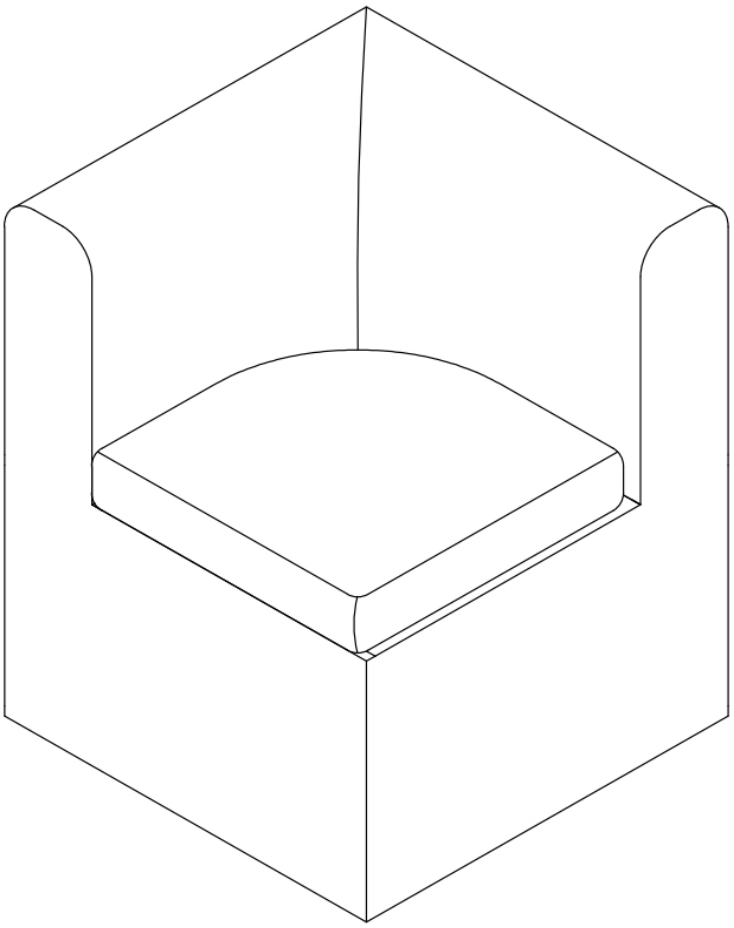

Assembly Instructions & Care Guide

CASTLERY

Hello there.

We're so glad that our Castlery product has found a home with you. As proud makers of modern, quality furniture, we’re confident that you will love and enjoy your purchase.

Setting it up is easy. Read on for a step-by-step guide to have your item assembled and ready for use.

Once you’re done, consider sharing a photo on social media or leaving us a review. We’d love to see how you've styled it in your space.

Thank you for being part of the Castlery community!

Contact us.

Should you have any questions or concerns regarding your purchase, you can contact us via **www.castlery.com/contact-us.**

www.castlery.com

Before you start...

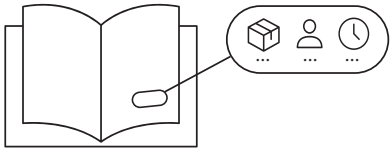

Check that you have received all cartons and familiarize yourself with the assembly requirements. This includes setting aside the allocated time required and having someone to assist you, if needed.

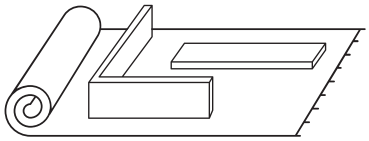

Ensure enough space for assembly. We recommend protecting your floor with a mat or cardboard to avoid scratches during the assembly process.

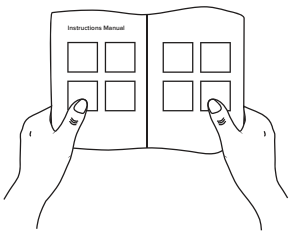

Read instructions carefully, and check that no parts are missing.

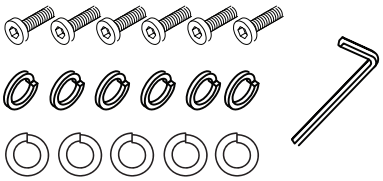

Lay out all hardware on a soft surface so you can easily identify them.

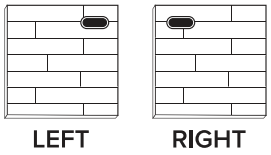

Carefully identify all components to differentiate which pieces are left and right.

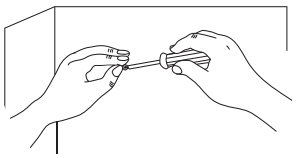

Carefully install your new product following the instructions stated. Don't skip ahead!

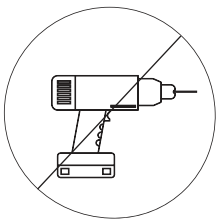

DO NOT over-tighten screws or use a drill.
Only professional assemblers should use a drill.

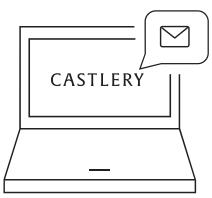

If you need further assistance, please contact us via **www.castlery.com/contact-us**.

Overview

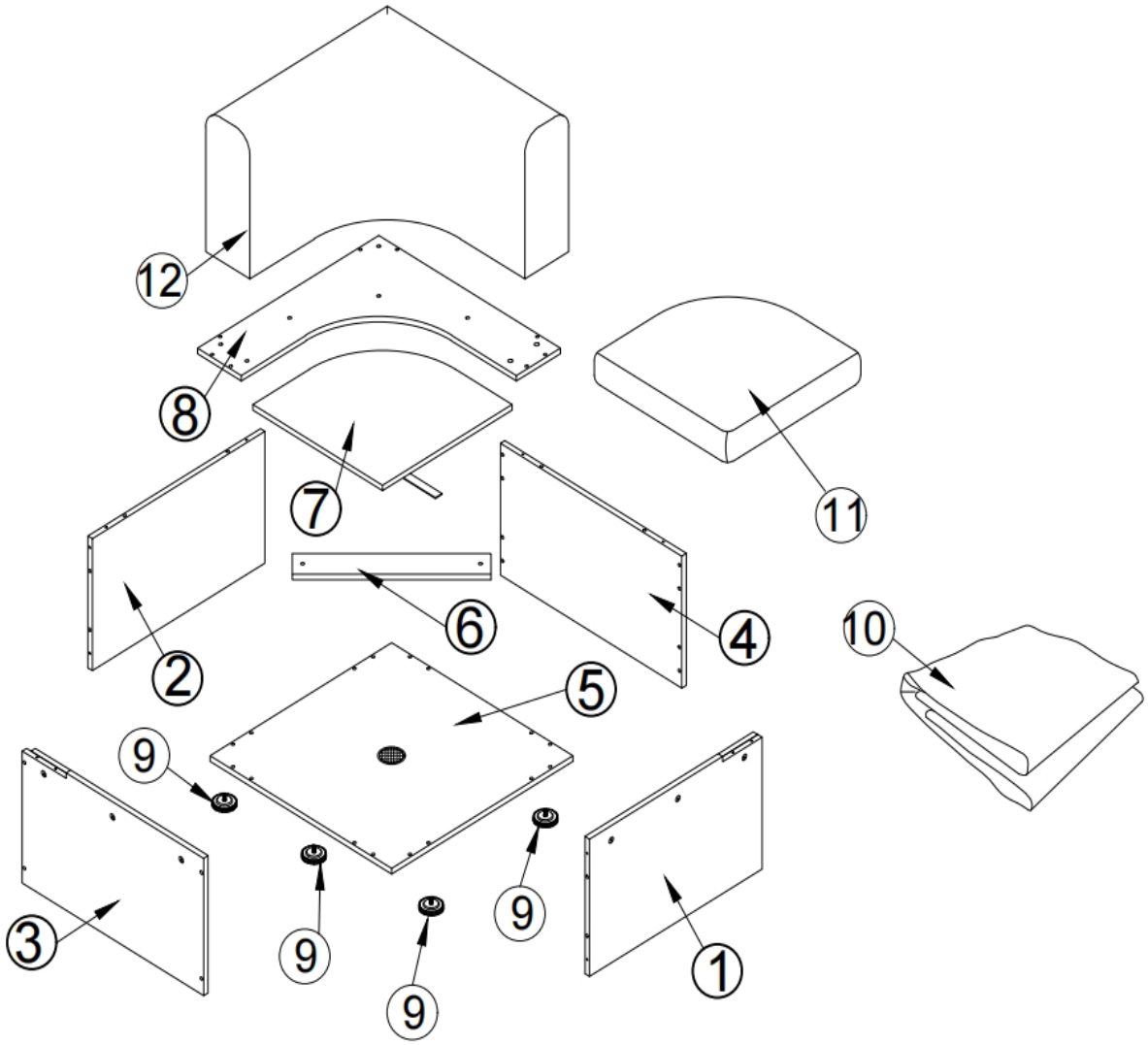

x1 x1 25 mins

There are inner box(es) that include components required to complete this assembly.

Please do not completely tighten all the hardware, until each assembly step is complete.

Before discarding the packaging, please use the checklist to ensure that you have all the parts required to assemble your product. Please kindly note if applicable please keep the original package when you want to return the product later.

If parts are missing or damaged, we will gladly ship your replacements parts free of charge. Please contact us via **www.castlery.com/contact-us.** Illustrations in this guide are for reference only and may be slightly different from the actual object.

Parts

BOX 1 OF 1

☐ 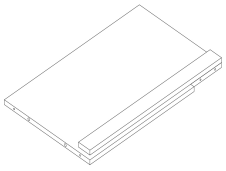

① Right Side **x1**

☐ 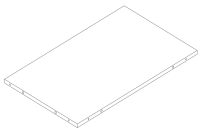

② Rear **x1**

☐ 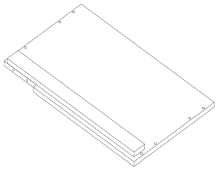

③ Left Side **x1**

☐ 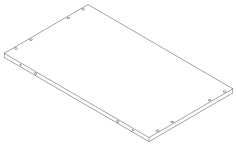

④ Rear **x1**

☐ 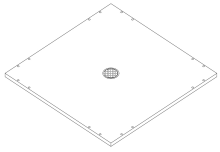

⑤ Bottom **x1**

☐ 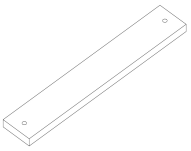

⑥ Support **x1**

☐ 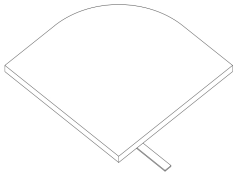

⑦ Seat **x1**

☐ 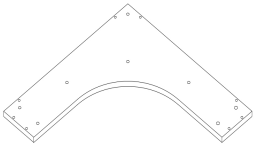

⑧ Connector **x1**

☐ 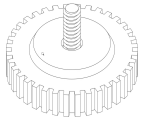

⑨ Legs **x4**

☐ 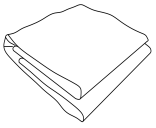

⑩ Cover **x1**

☐ 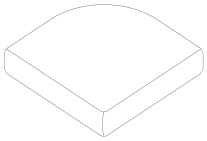

⑪ Cushion **x1**

☐ 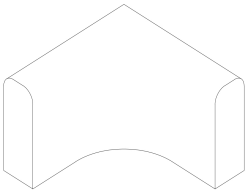

⑫ Backrest **x1**

☐ 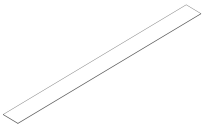

⑬ Velcro Protector For Washing **x3**

Hardware

BOX 1 OF 1

☐ 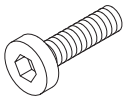 Ⓐ Bolt M8*30mm **x6**

☐ 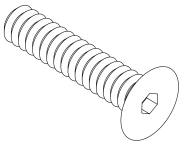 Ⓑ Bolts M8*50mm **x2**

☐ 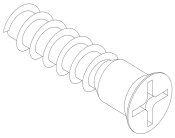 Ⓒ Bolts M7*30mm **x24**

☐ 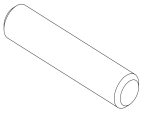 Ⓓ Dowels **x20**

☐  Ⓔ Spring Washer **x6**

☐  Ⓕ Falt Washer **x6**

☐  Ⓖ Allen Key **x1**

Step 1

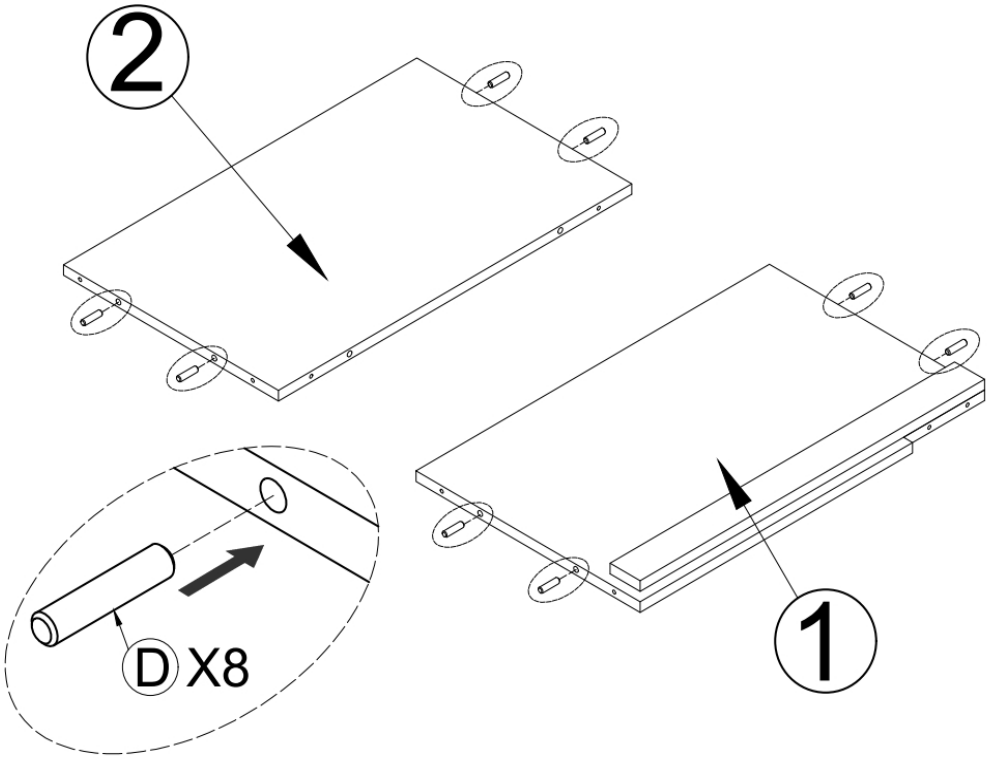

Step 2

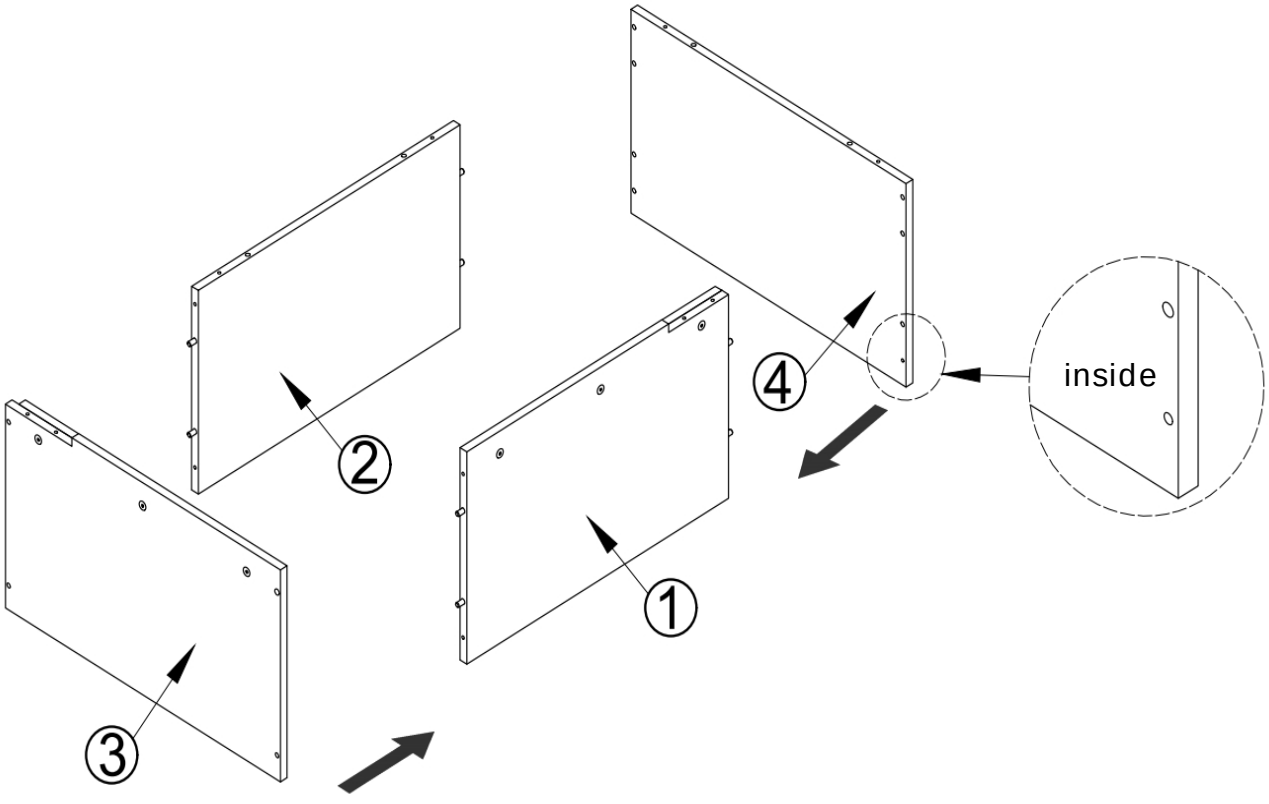

Step 3

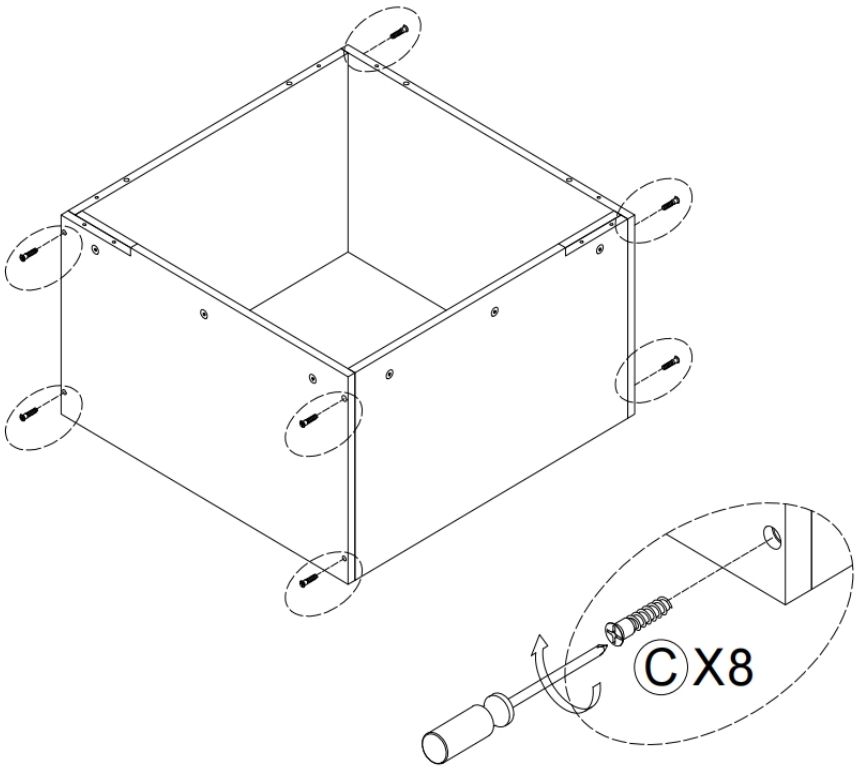

Step 4

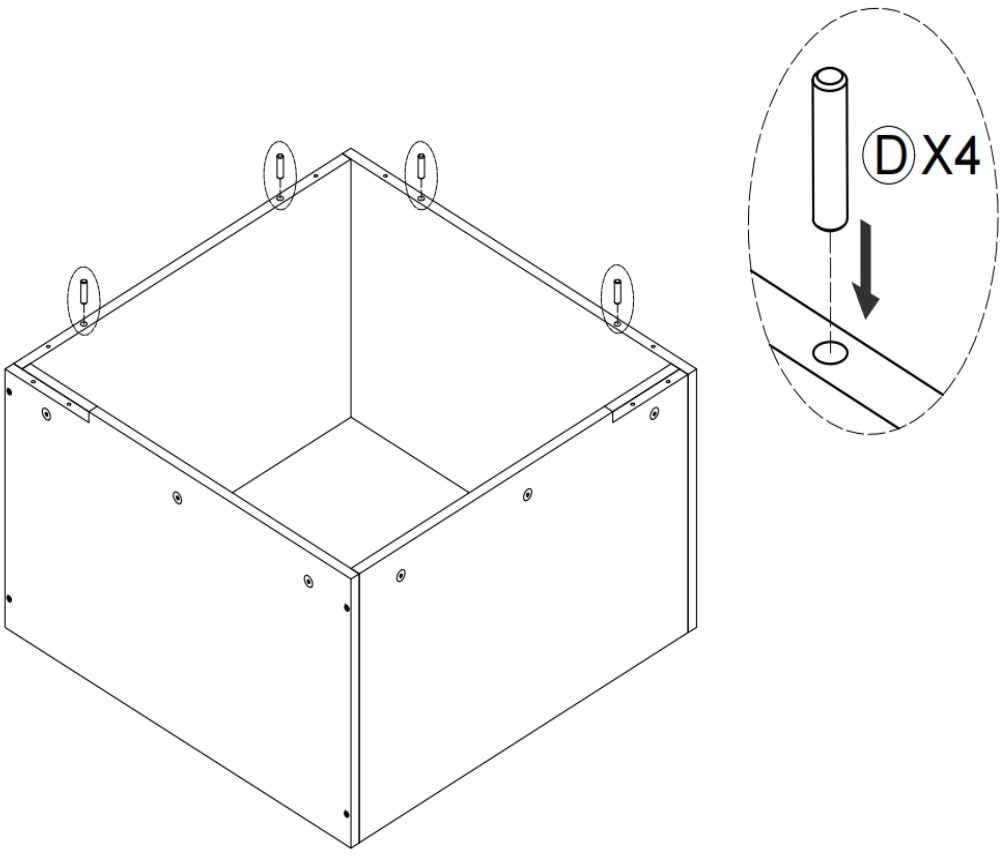

Step 5

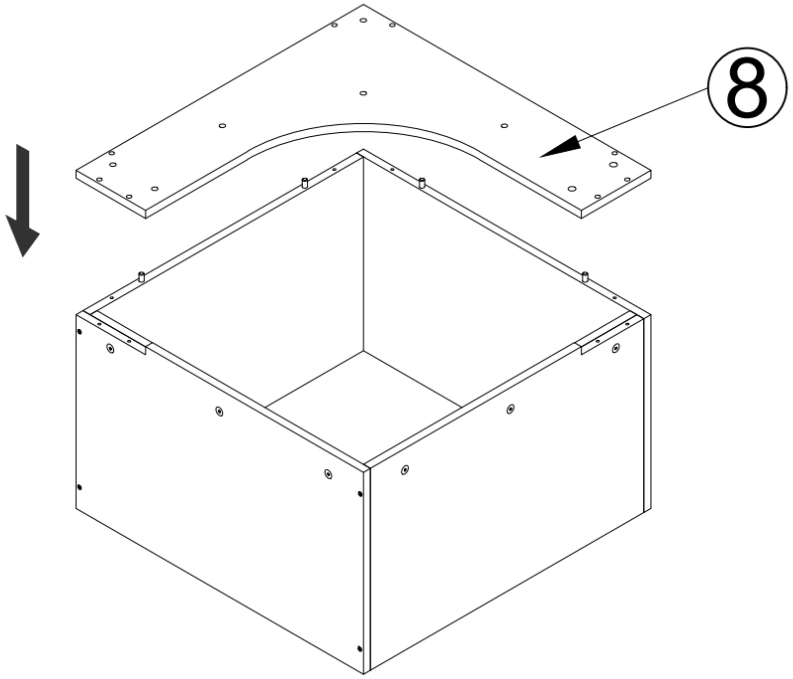

Step 6

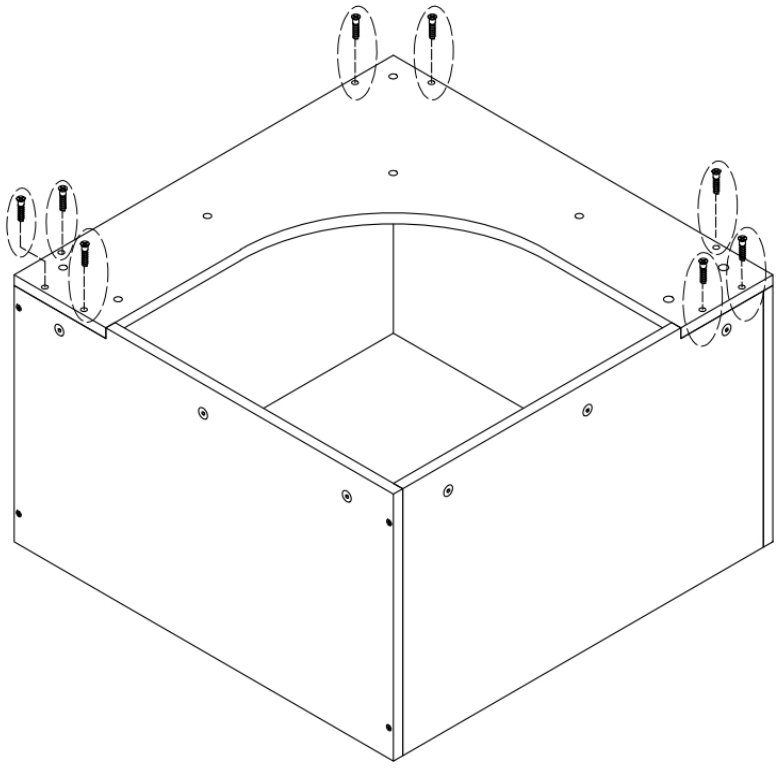

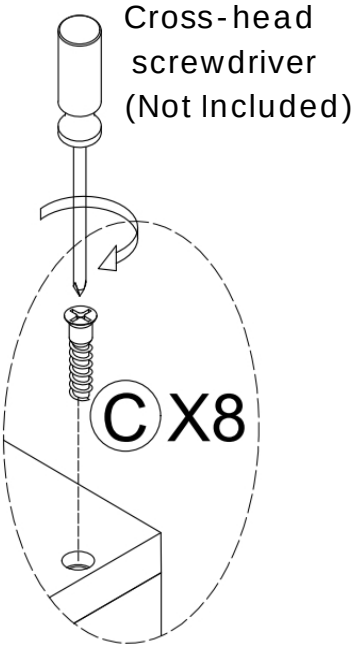

Step 7

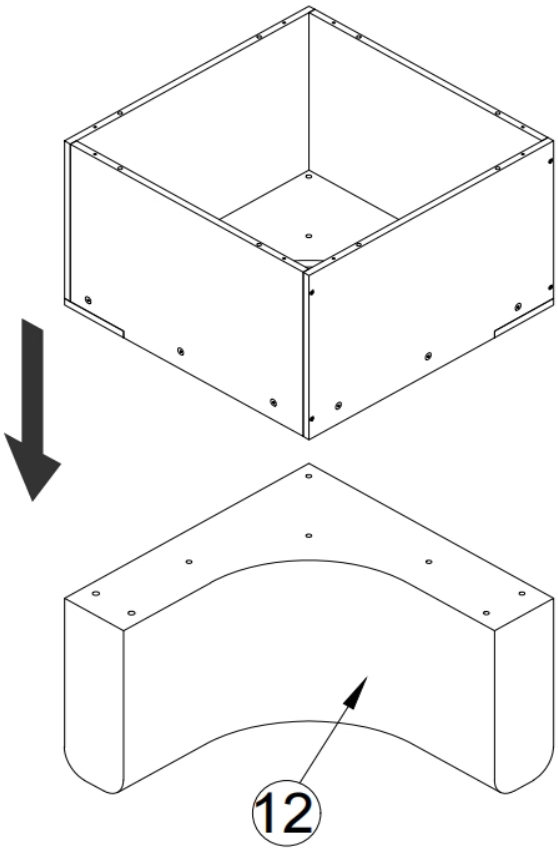

Step 8

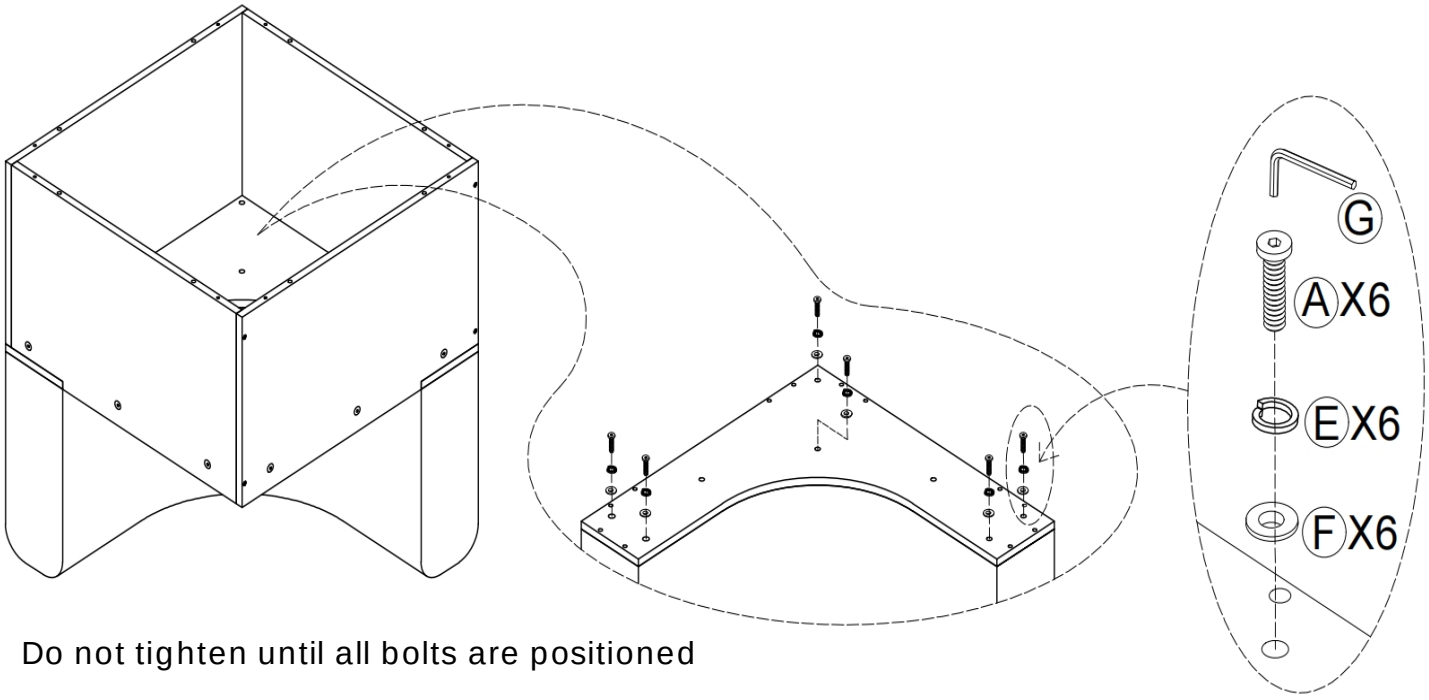

Do not tighten until all bolts are positioned

Step 9

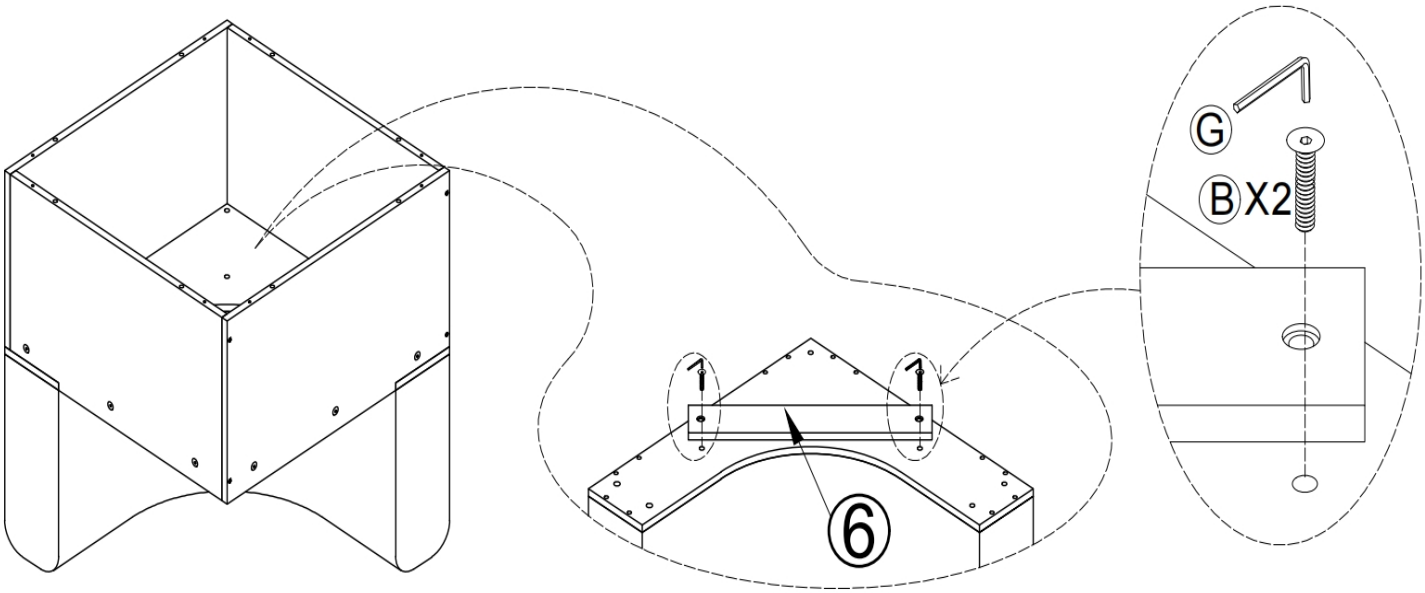

Step 10

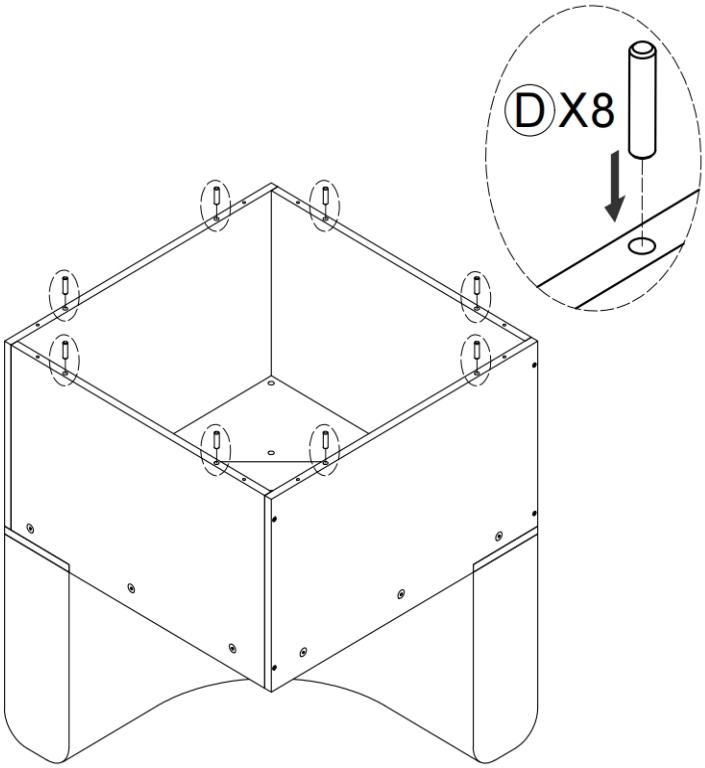

Step 11

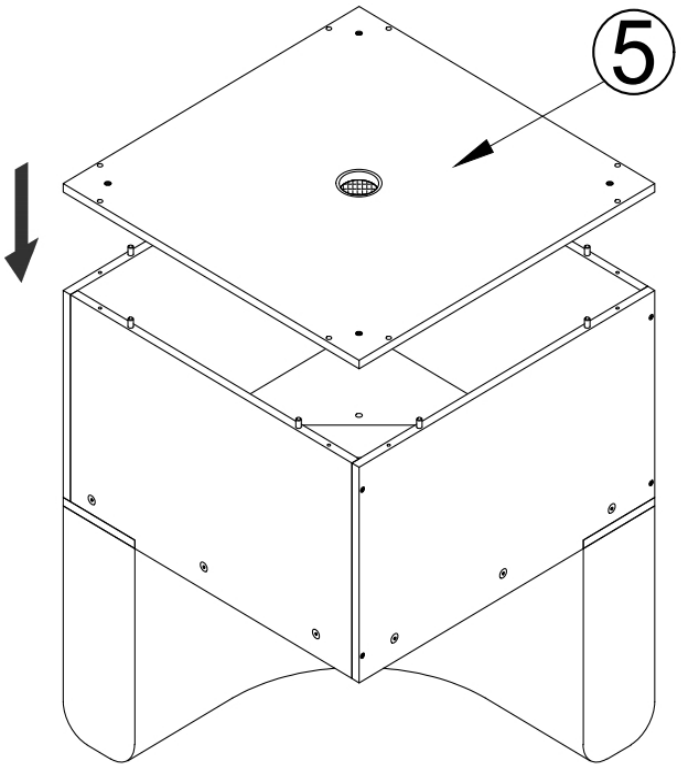

Step 12

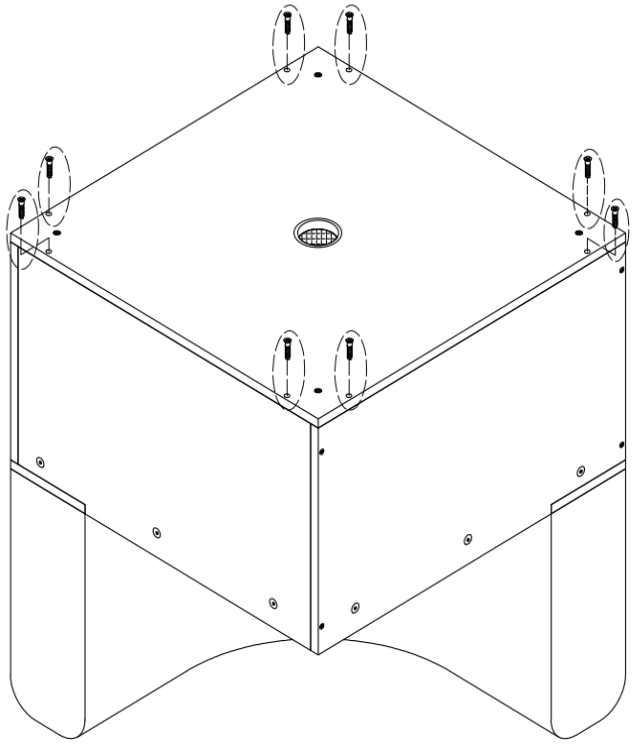

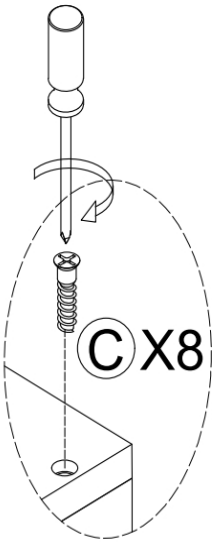

Do not tighten until all bolts are positioned

Step 13

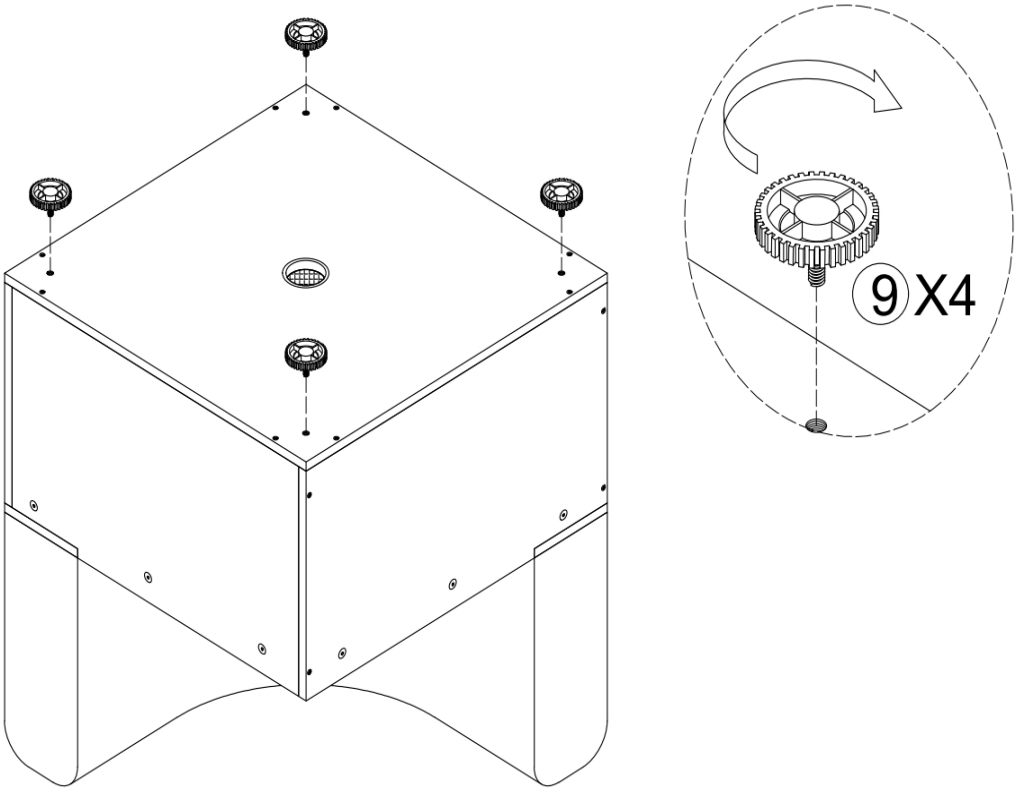

Step 14

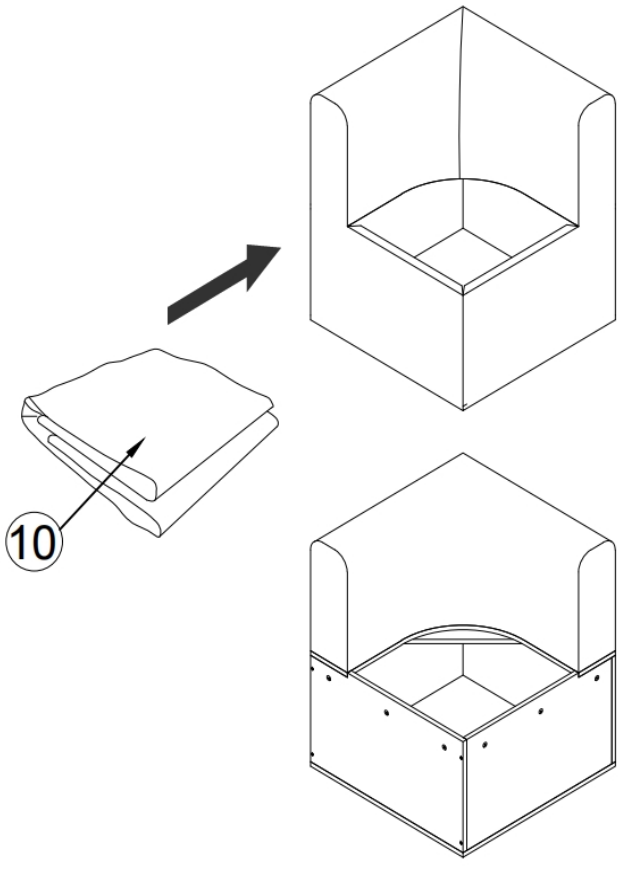

Step 15

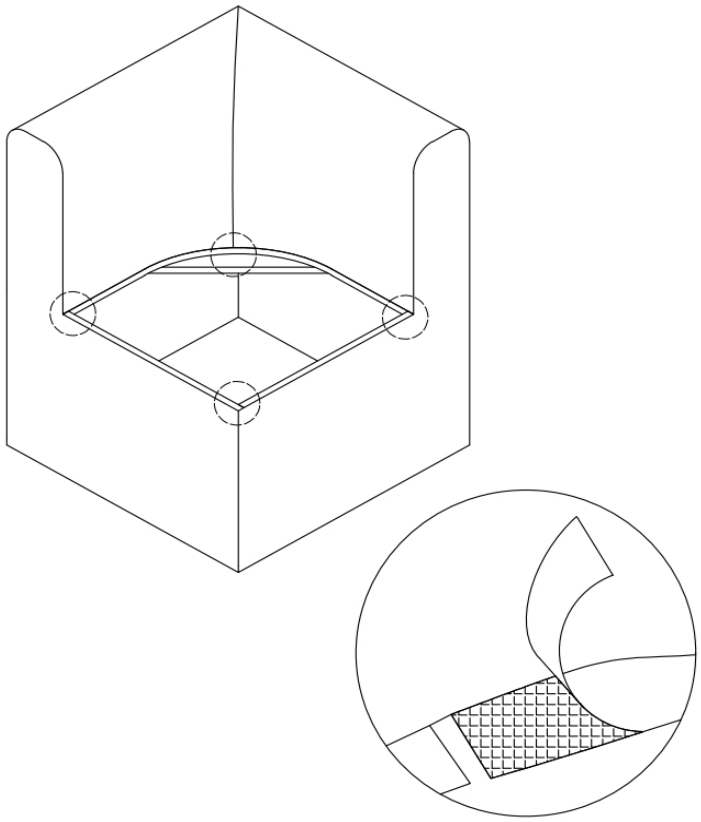

Step 16

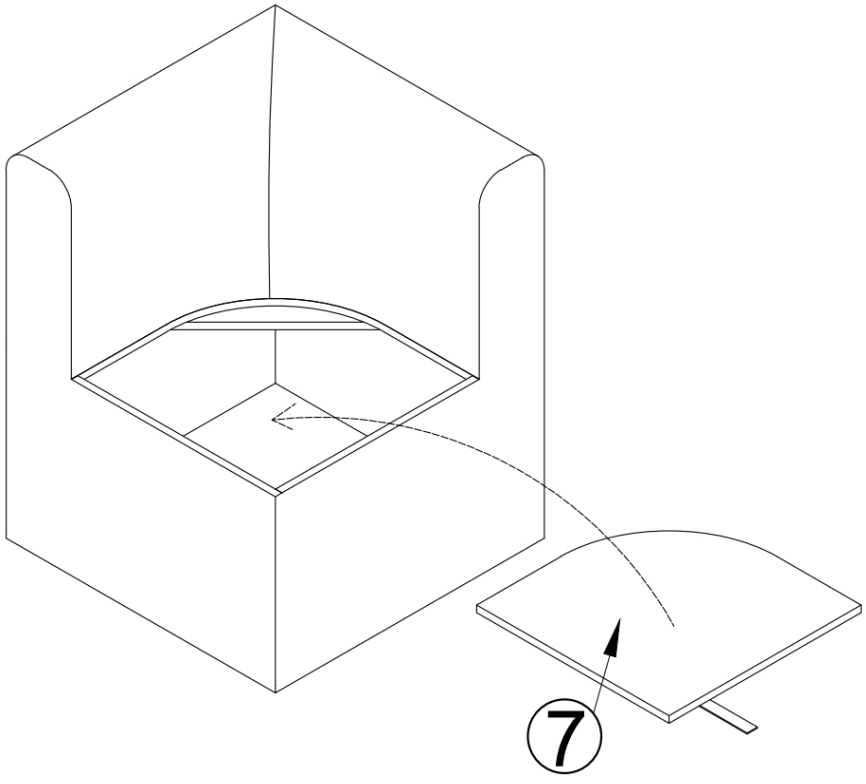

Step 17

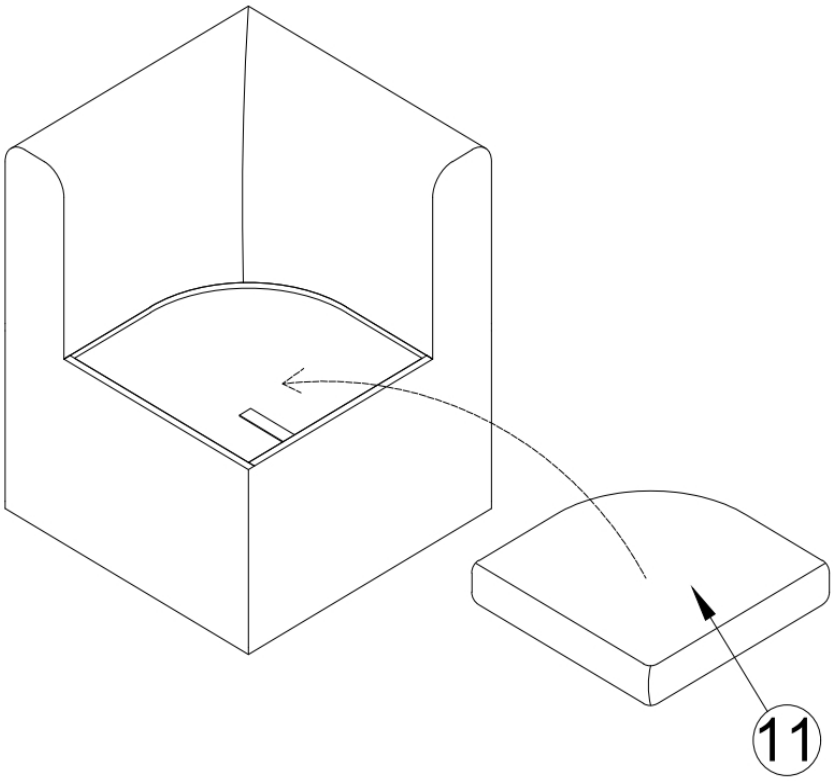

Finished!

Congratulations, we're almost there!
<u>Please perform the following checks:</u>

1. Ensure all bolts are tightened.
2. Do not miss bolt installation.

Always lift your Castlery product when moving it to your preferred location. Levelers (if any) may slant if you drag your product.

Finally, clean the product with a damp cloth.

You're all set! Enjoy your new living space, thanks to the addition of your Castlery product.

Note: Your actual product may have minor size differences due to manual measurements.

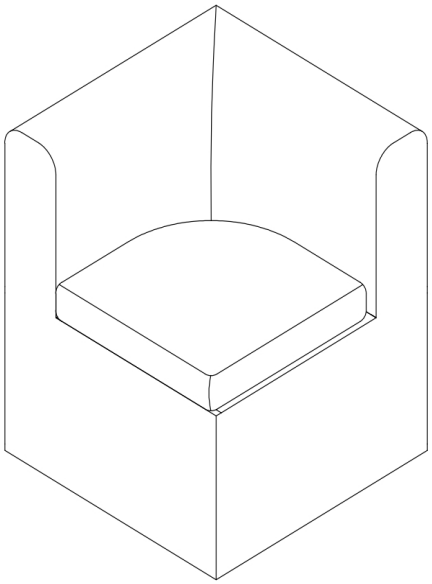

COVER WASHING INSTRUCTIONS

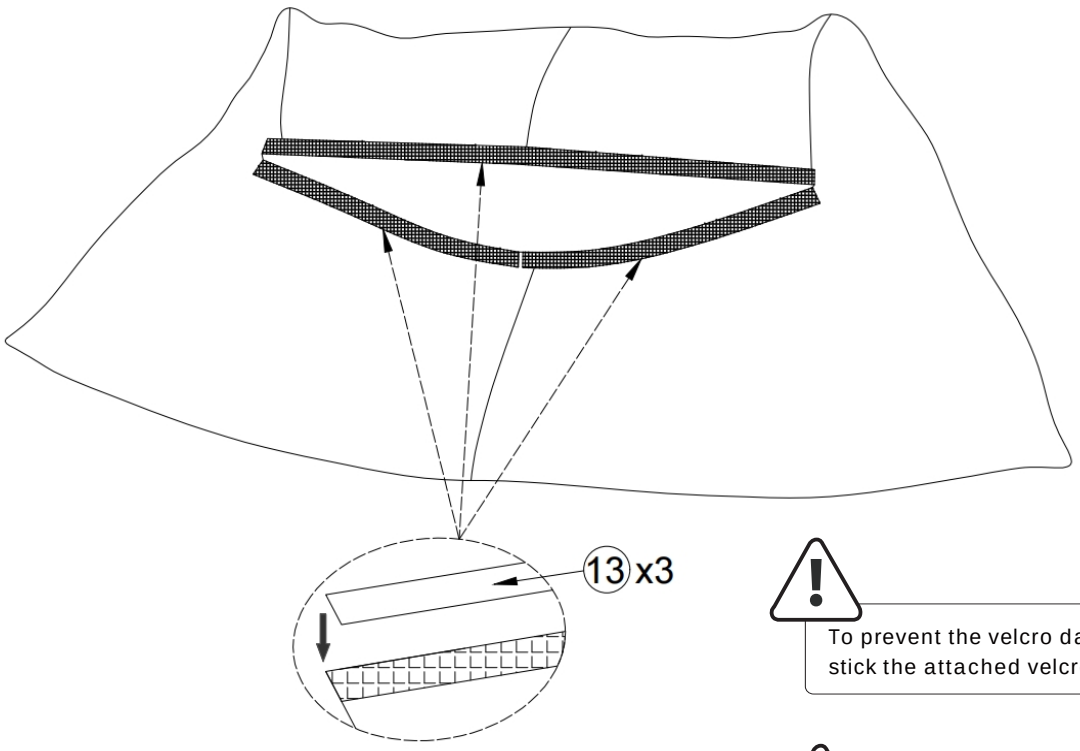

To prevent the velcro damages fabric,recommend to stick the attached velcro protectors when washing cover.

The velcro protectors are reusable.

Care Instructions

Your furniture, if treated with respect and love, will last you a long time. Each piece requires light maintenance to maximize its longevity.

Dinning chairs & Benches Care

General Care

- Do not tilt the chair backwards or forwards while seated.
- Periodically check that all connections are tightly secured.

Wooden Type Care

- Dust with a soft dry cloth and clean with a sligtly damp cloth.
- Avoid abrasive cleaners and placing rough or sharp objects on the surface.
- Keep furniture away from direct heat or sunlight.
- Wipe spills immediately.

Upholstered Type Care

- Avion prolonged exposure to direct sunlight and keep furniture away from any heating source to provent fading or discolouration.
- Using a brush attachment, vacuum fabric seats regularly to remove any dust particles.
- professional cleaning is advised for tough stains

Follow the care instructions and look after your furniture. In return, your furniture will look after you. For more information on our care instructions, visit our product website at www.castlery.com.

We hope to see you soon!