Remi Chaise Sectional Sofa Right Facing

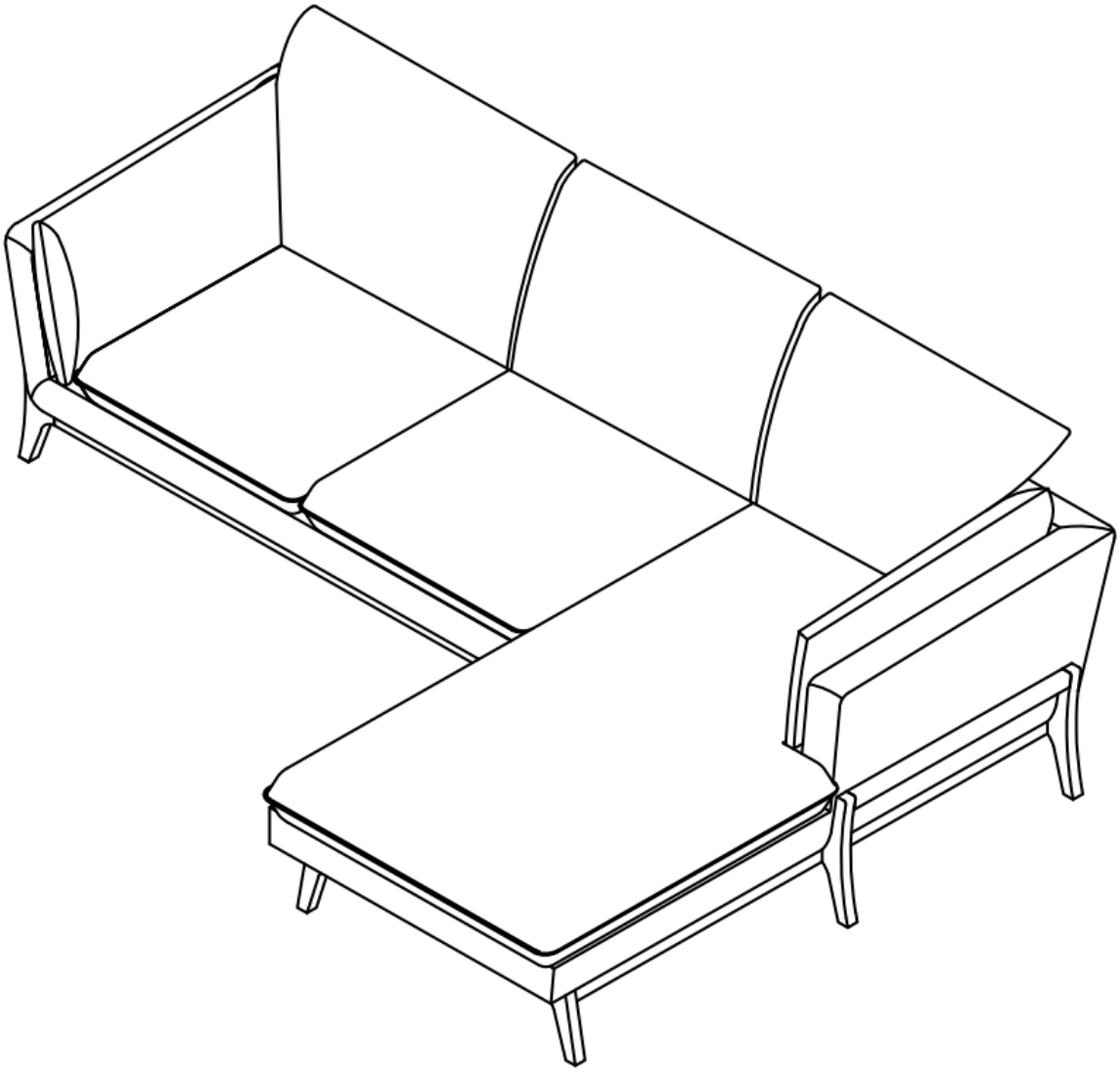

Assembly Instructions & Care Guide

CASTLERY

Hello there.

We're so glad that our Castlery product has found a home with you. As proud makers of modern, quality furniture, we're confident that you will love and enjoy your purchase.

Setting it up is easy. Read on for a step-by-step guide to have your item assembled and ready for use.

Once you're done, consider sharing a photo on social media or leaving us a review. We'd love to see how you've styled it in your space.

Thank you for being part of the Castlery community!

Contact us.

Should you have any questions or concerns regarding your purchase, you can contact us via **www.castlery.com/contact-us**.

Before you start...

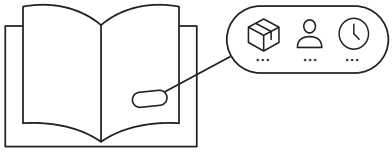

Check that you have received all cartons and familiarize yourself with the assembly requirements. This includes setting aside the allocated time required and having someone to assist you, if needed.

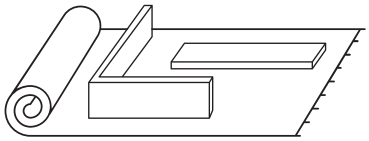

Ensure enough space for assembly. We recommend protecting your floor with a mat or cardboard to avoid scratches during the assembly process.

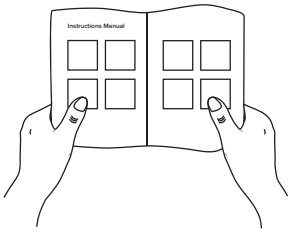

Read instructions carefully, and check that no parts are missing.

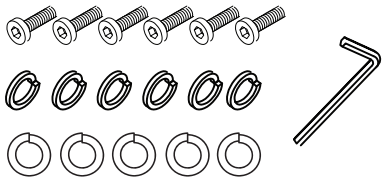

Lay out all hardware on a soft surface so you can easily identify them.

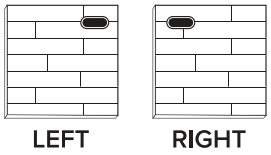

Carefully identify all components to differentiate which pieces are left and right.

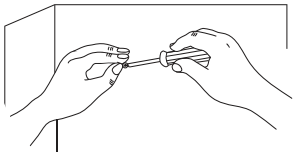

Carefully install your new product following the instructions stated. Don't skip ahead!

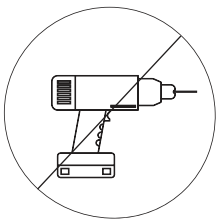

DO NOT over-tighten screws or use a drill.
Only professional assemblers should use a drill.

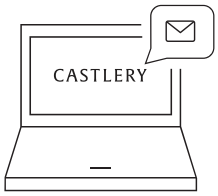

If you need further assistance, please contact us via **www.castlery.com/contact-us**.

Overview

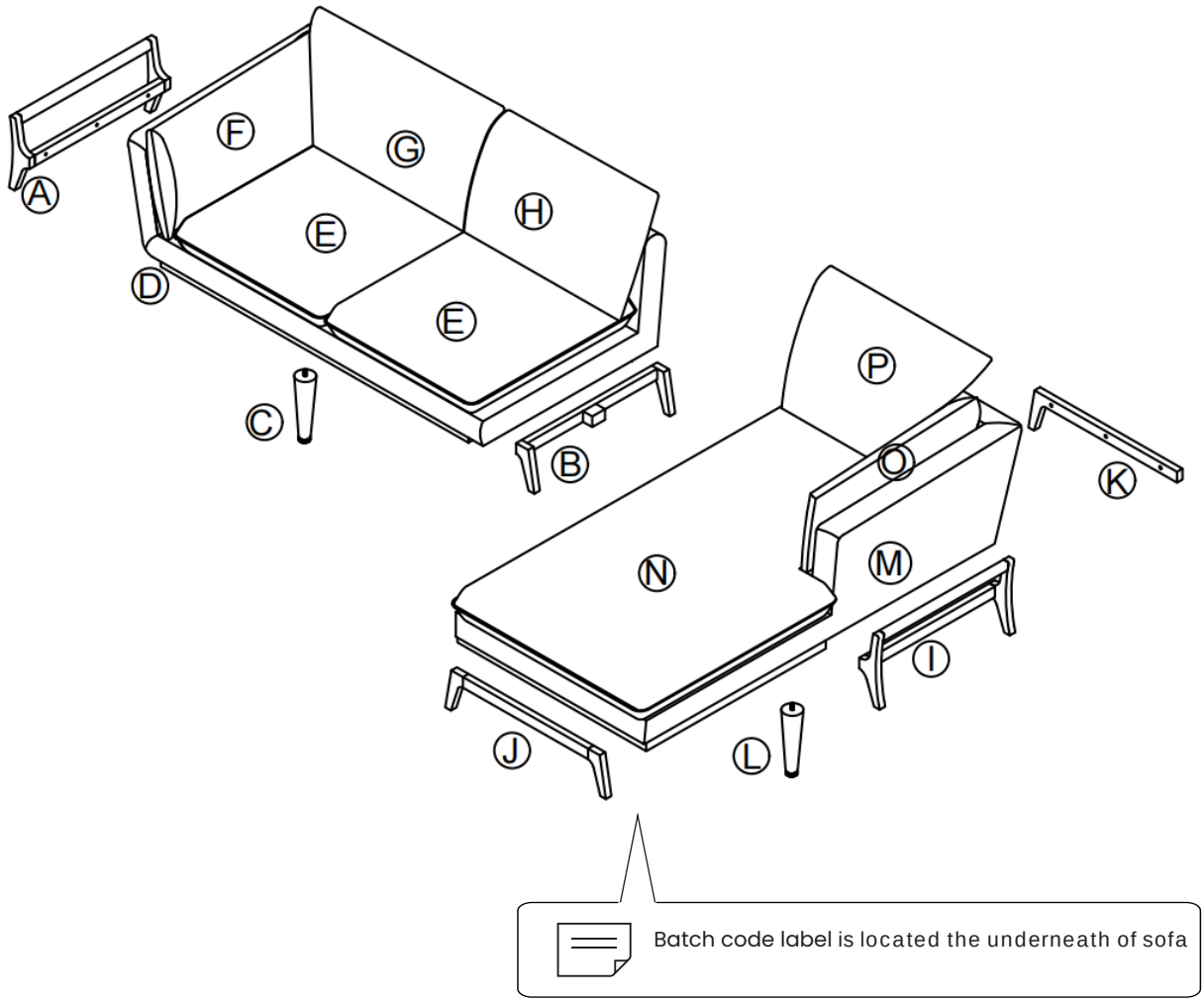

x2 x2 20 mins

IMPORTANT: 2 persons needed for assembly.
This will help to minimize potential damage to the product or injury to persons during assembly.

There are inner box(es) that include components required to complete this assembly.

Please do not completely tighten all the hardware, until each assembly step is complete.

Before discarding the packaging ,please use the checklist to ensure that you have all the parts required to assemble your product. please kindly note if applicable please keep the original packge when you want to return the product later

If parts are missing or damaged, we will gladly ship your replacements parts free of charge. Please contact us via **www.castlery.com/contact-us.** Illustrations in this guide are for reference only and may be slightly different from the actual object.

Parts

BOX 1 OF 2

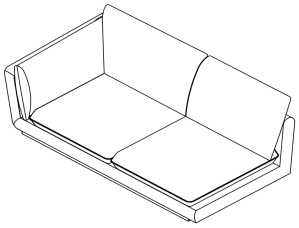

Ⓓ body **x1**

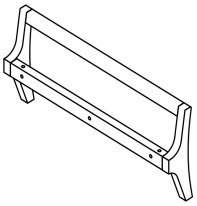

Ⓐ Leg **x1**

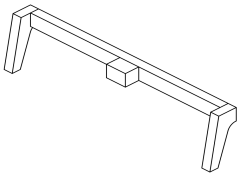

Ⓑ Leg **x1**

Ⓒ Middle Leg **x1**

BOX 2 OF 2

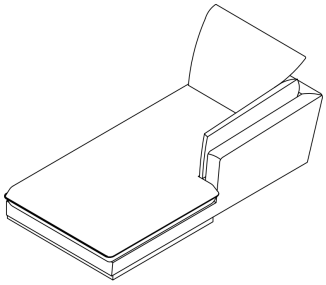

Ⓜ body **x1**

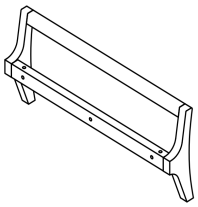

Ⓘ Leg **x1**

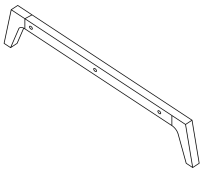

Ⓙ Leg **x1**

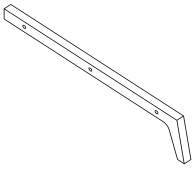

Ⓚ Leg **x1**

Ⓛ Middle Leg **x1**

Hardware

BOX 1 OF 2

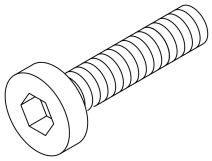

① Short Bolt M8*40mm

x6

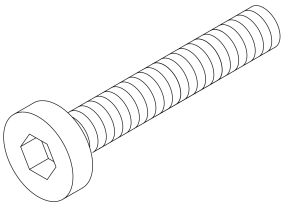

② Long Bolt M8*60mm

x2

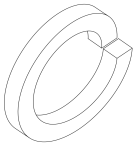

③ Spring Washer

x6

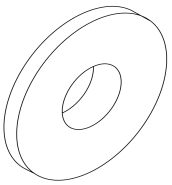

④ Falt Washer

x6

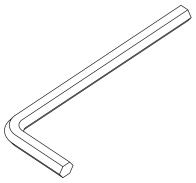

⑤ Allen Key

x1

BOX 2 OF 2

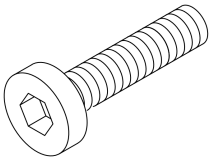

① Short Bolt M8*40mm

x9

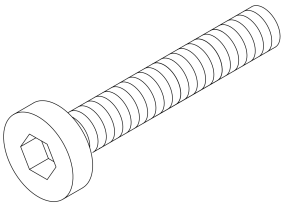

② Long Bolt M8*60mm

x2

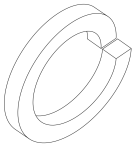

③ Spring Washer

x9

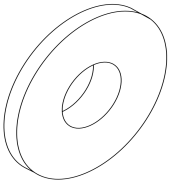

④ Falt Washer

x9

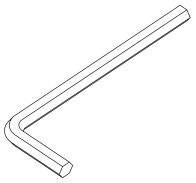

⑤ Allen Key

x1

Step 1

To assemble the legs,you need to open the zipper.

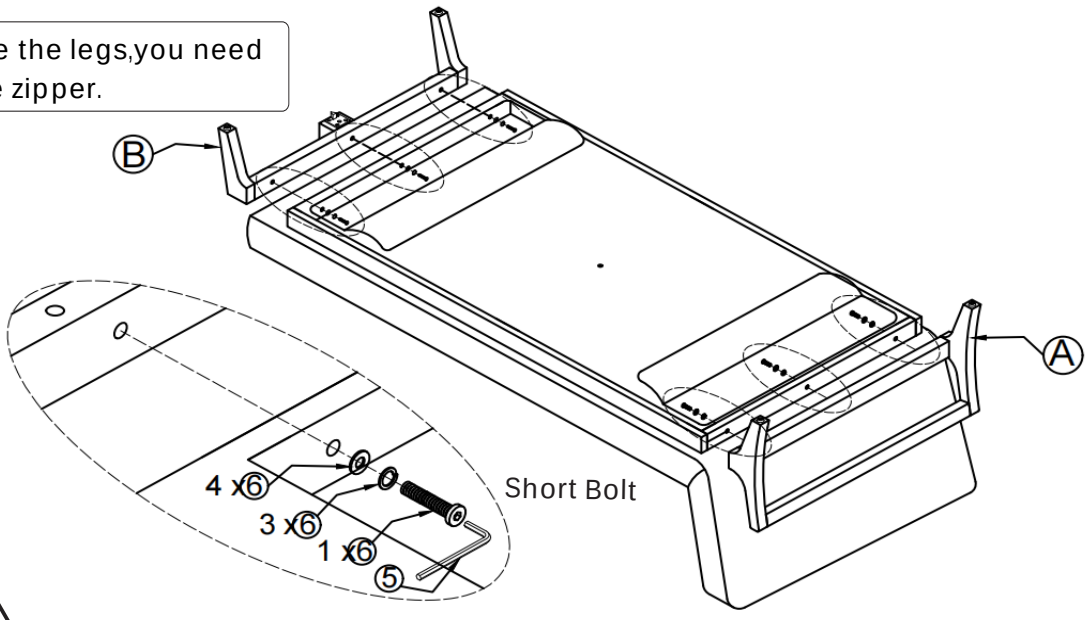

Do not tighten any bolts until all bolts are positioned

Step 2

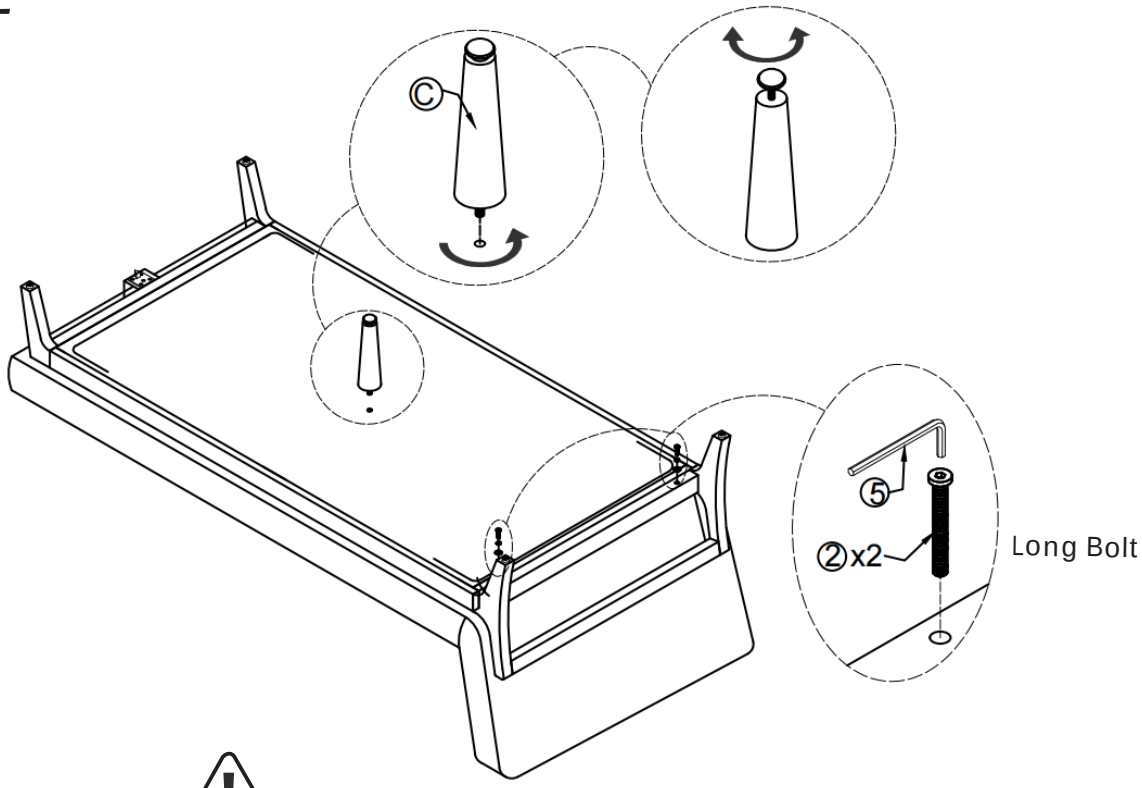

Do not tighten any bolts until all bolts are positioned

Step 3

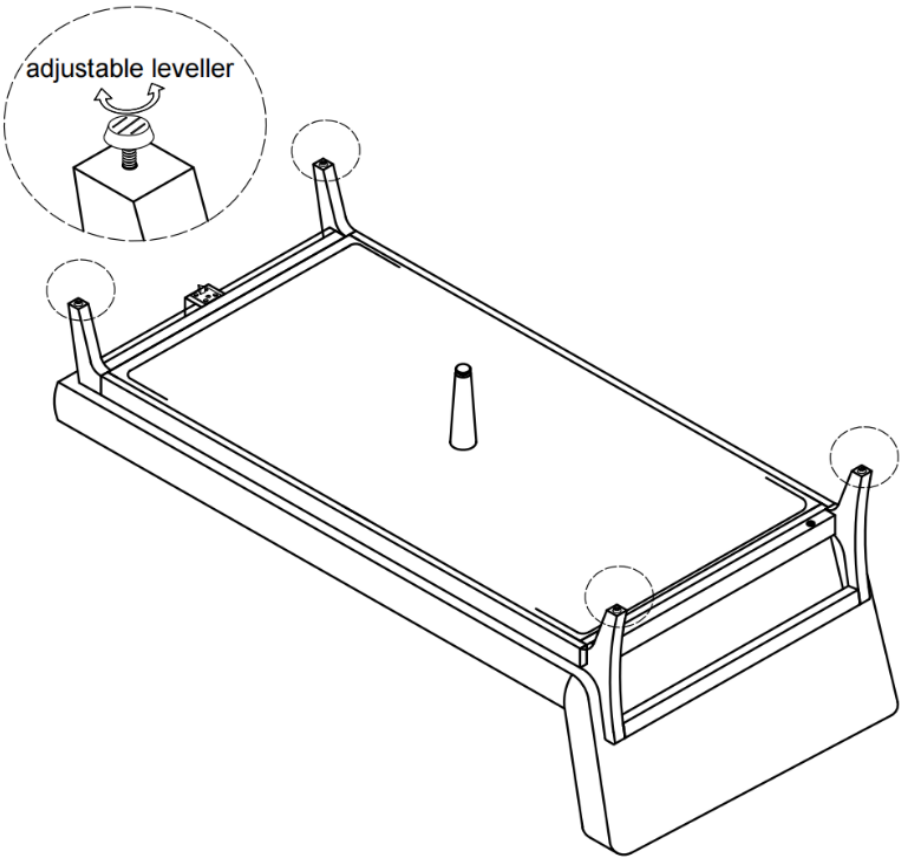

Step 4

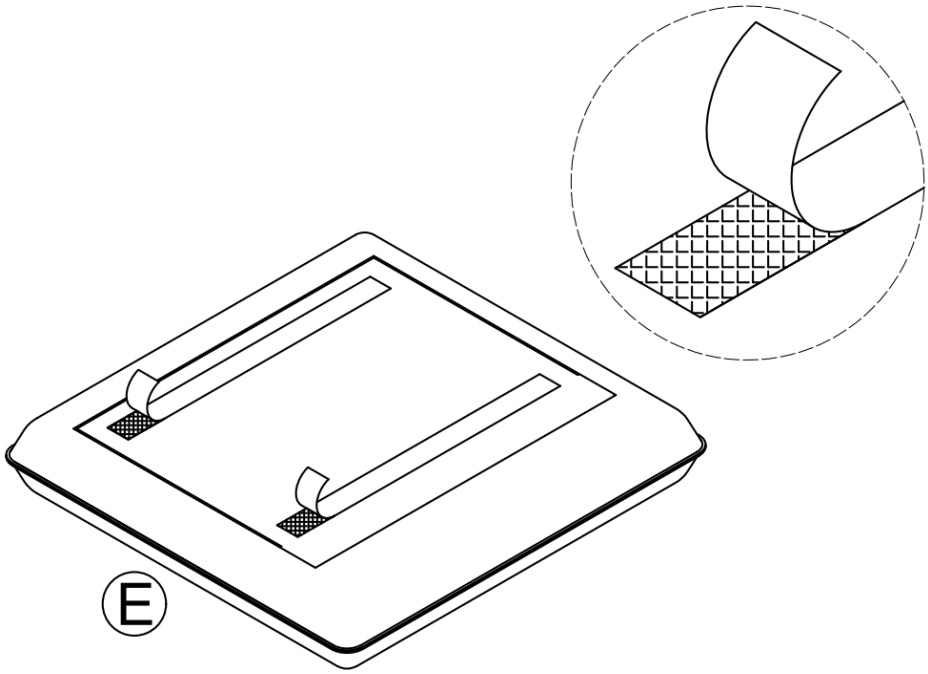

Step 5

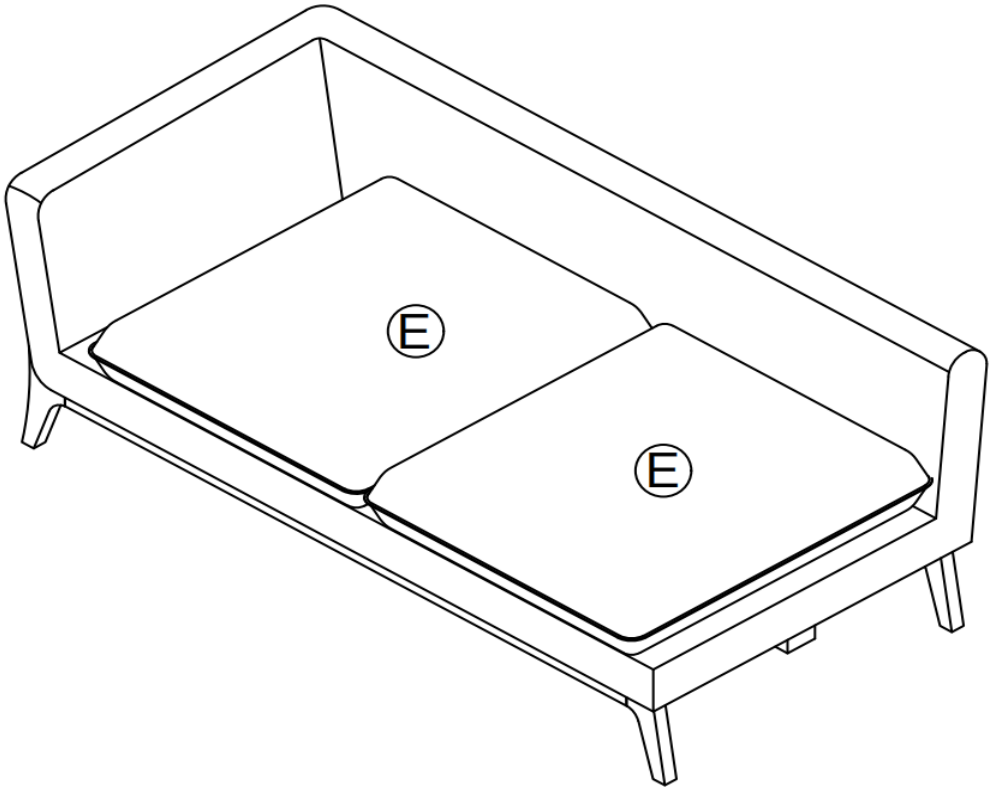

Step 6

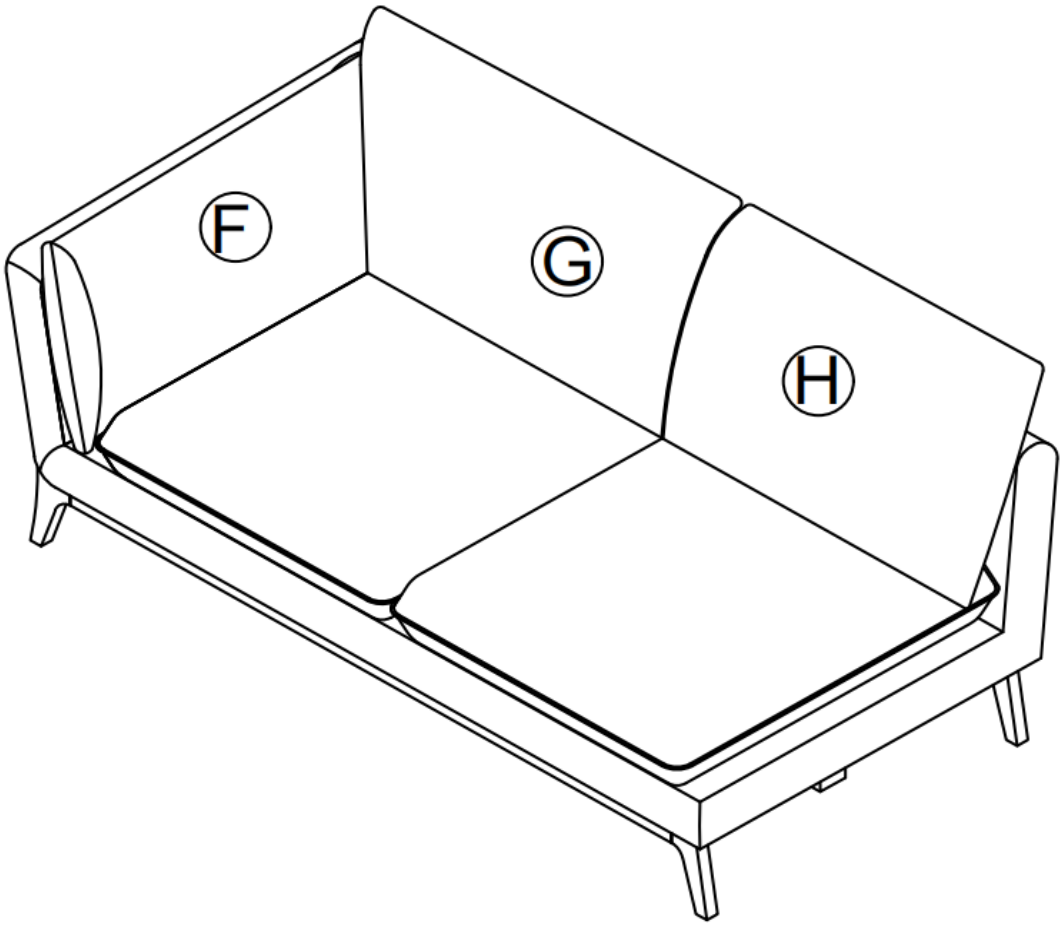

Step 7

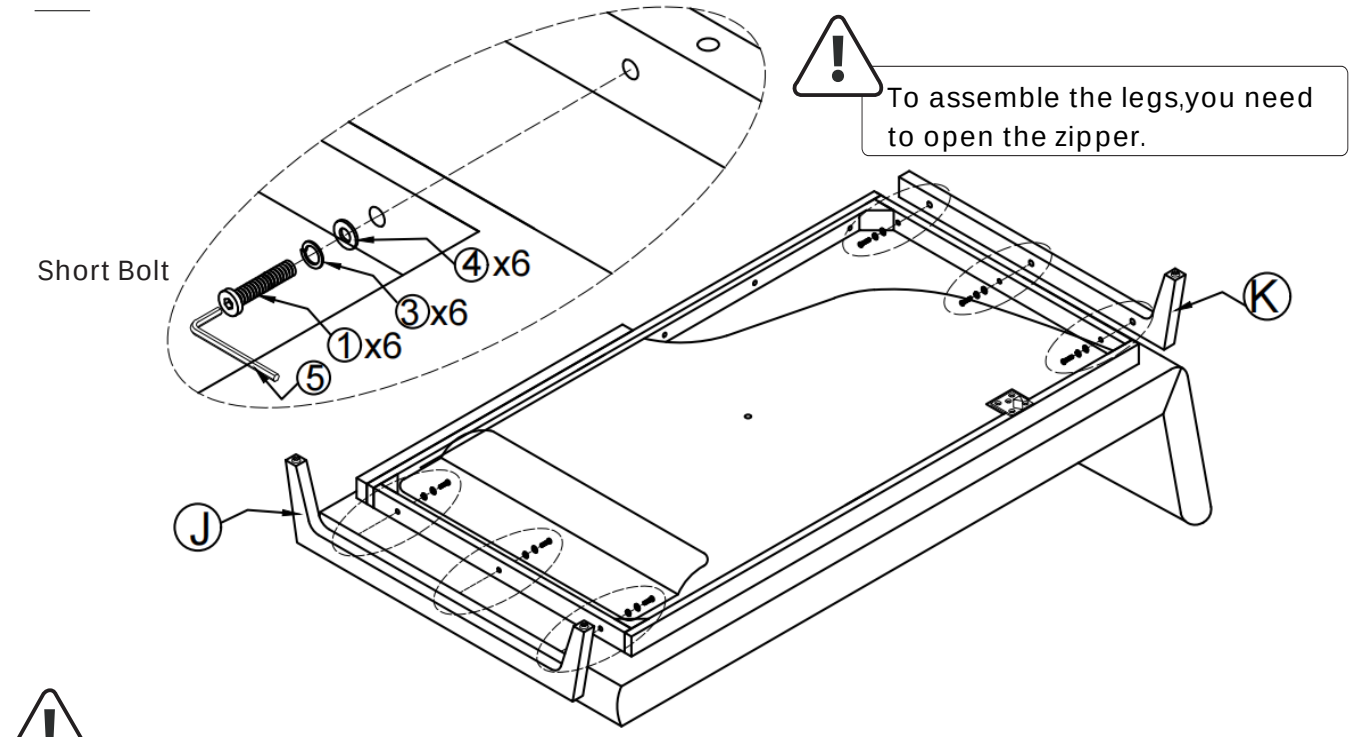

Do not tighten any bolts until all bolts are positioned

Step 8

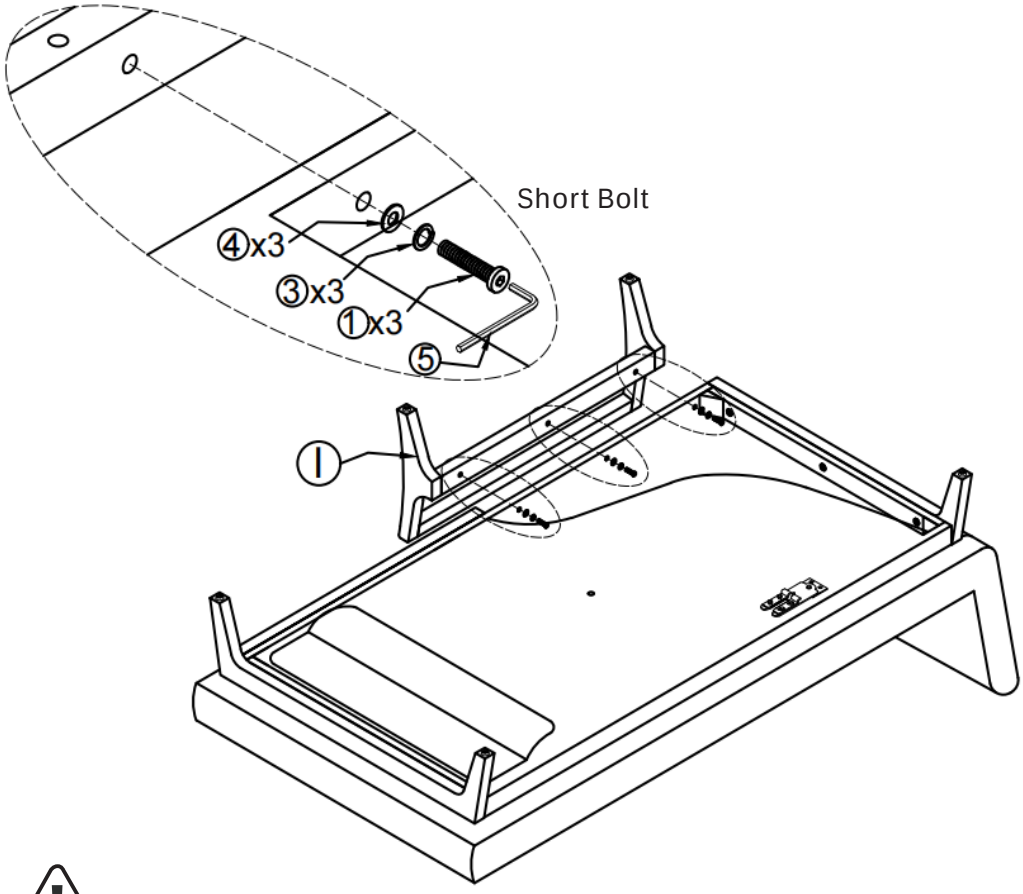

Do not tighten any bolts until all bolts are positioned

Step 9

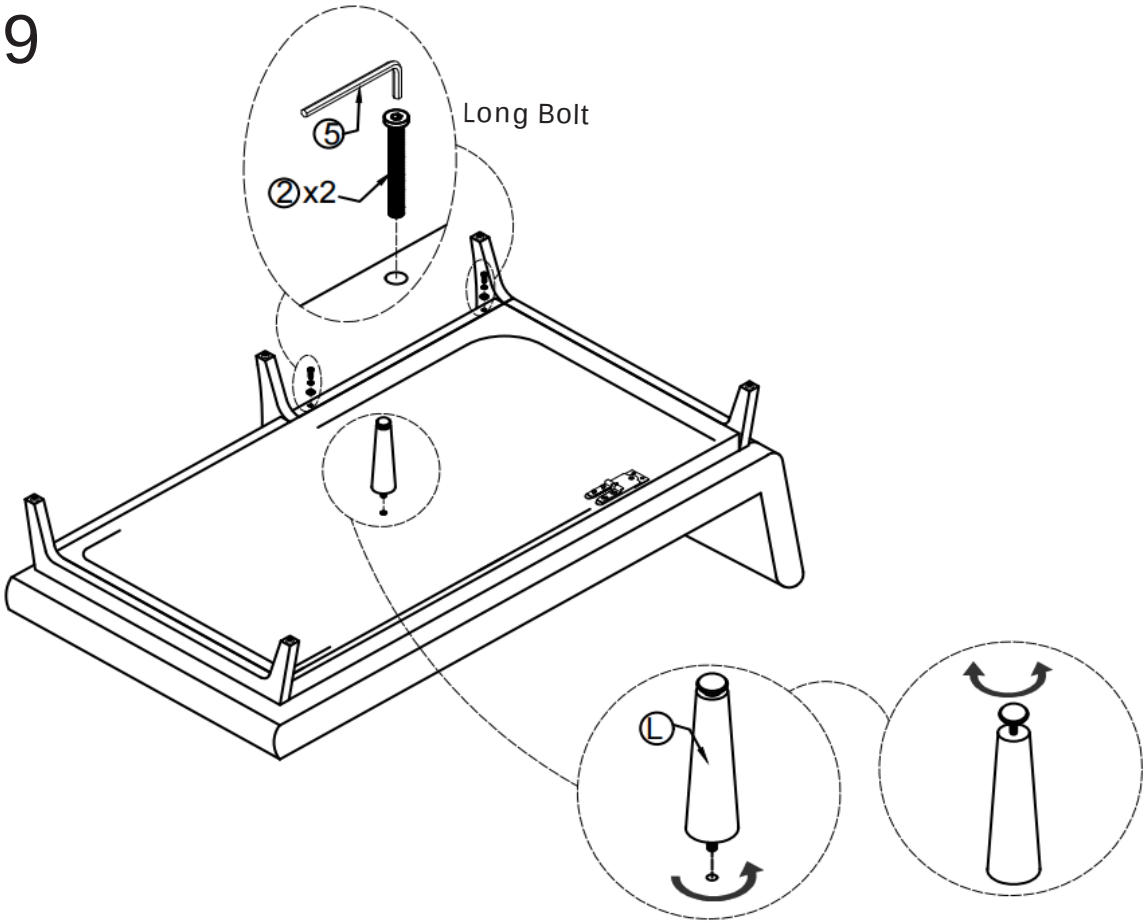

Step 10

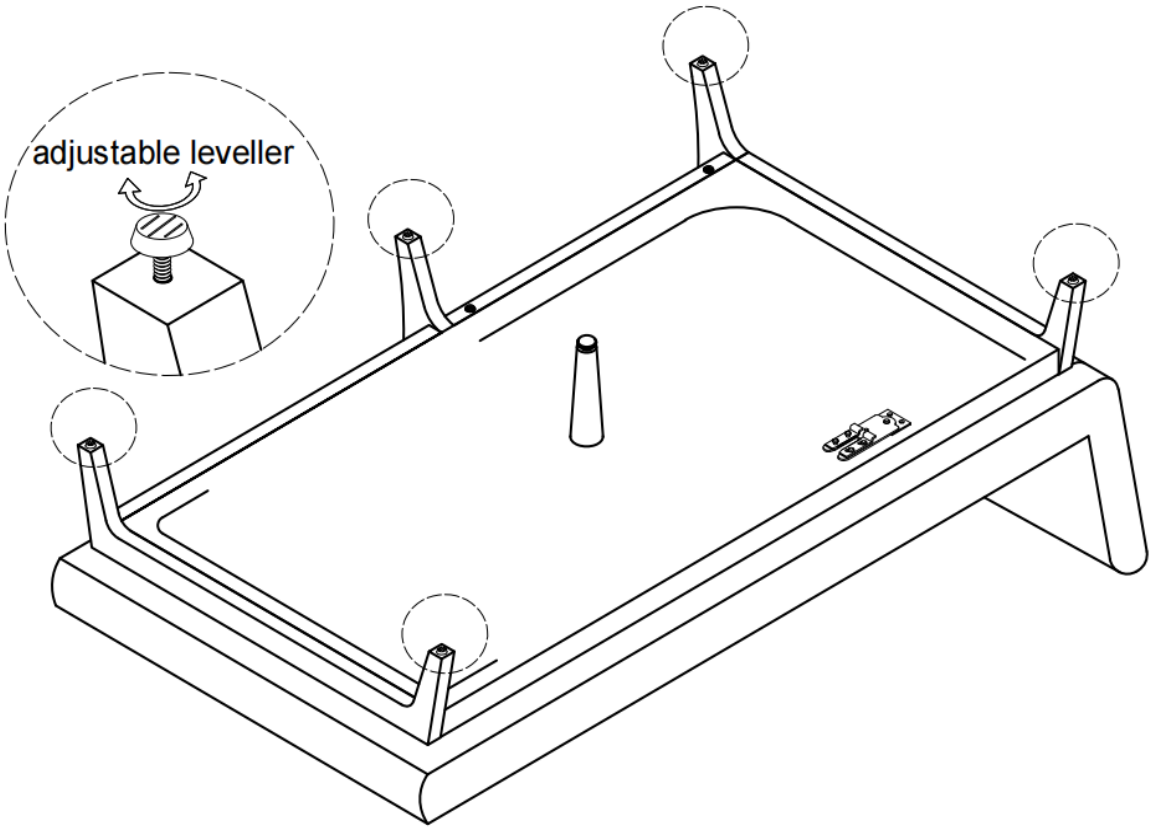

Step 11

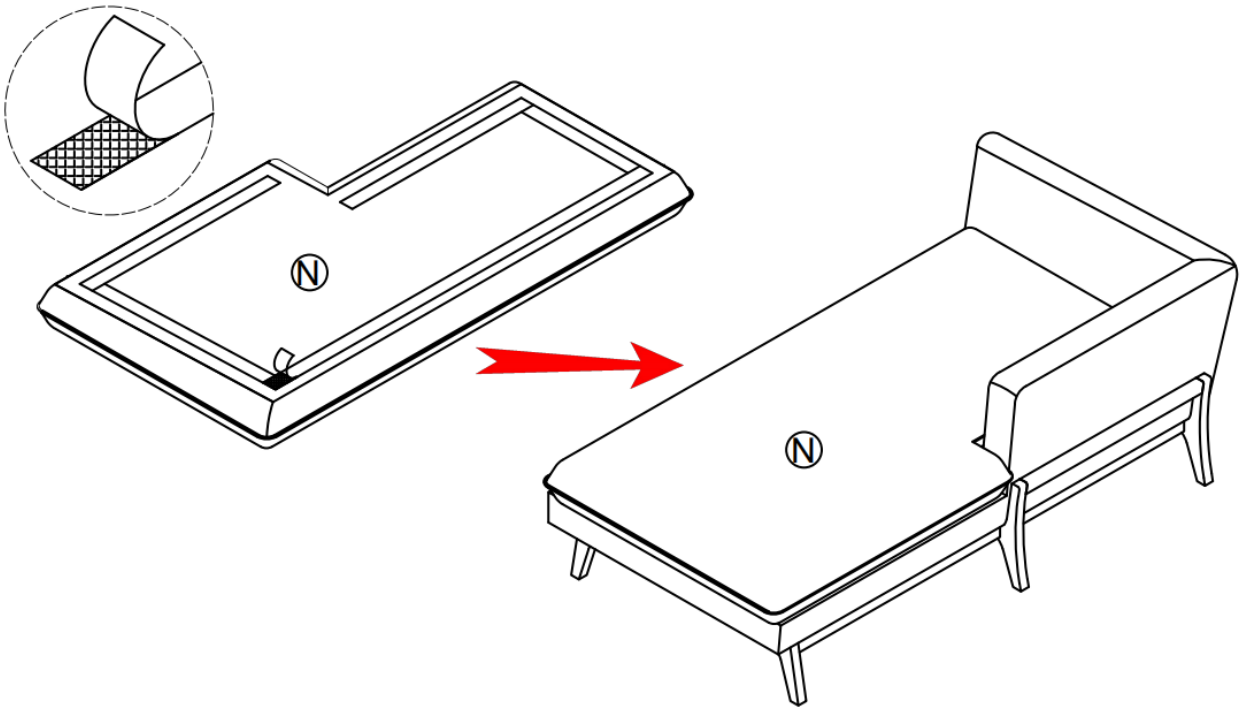

Step 12

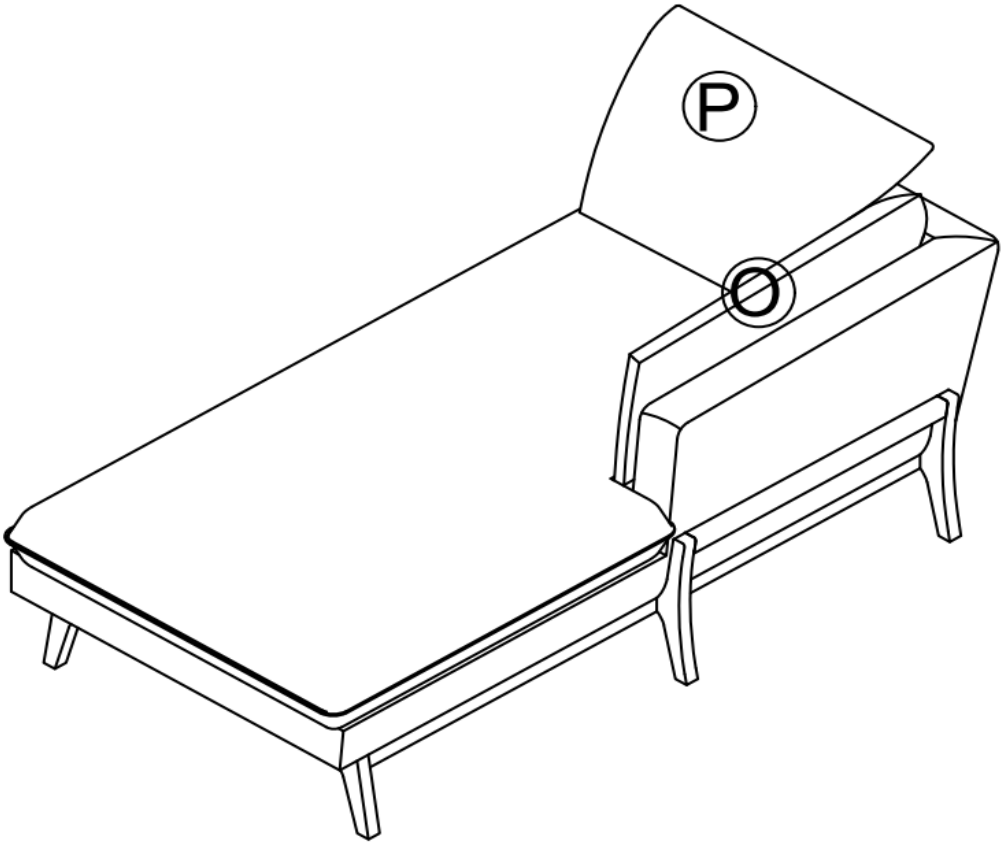

Step 13

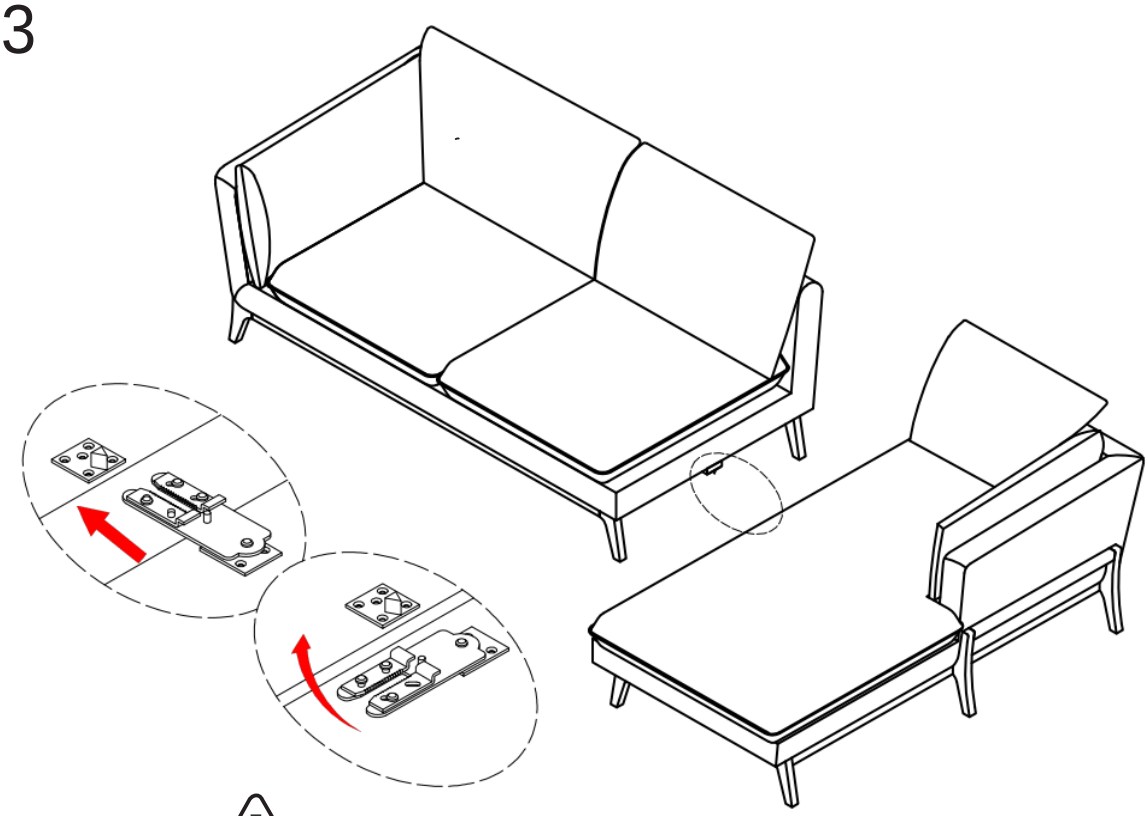

Ratchet fixing arm is positioned underneath the sofa,Rotate and align it to connect the pieces.

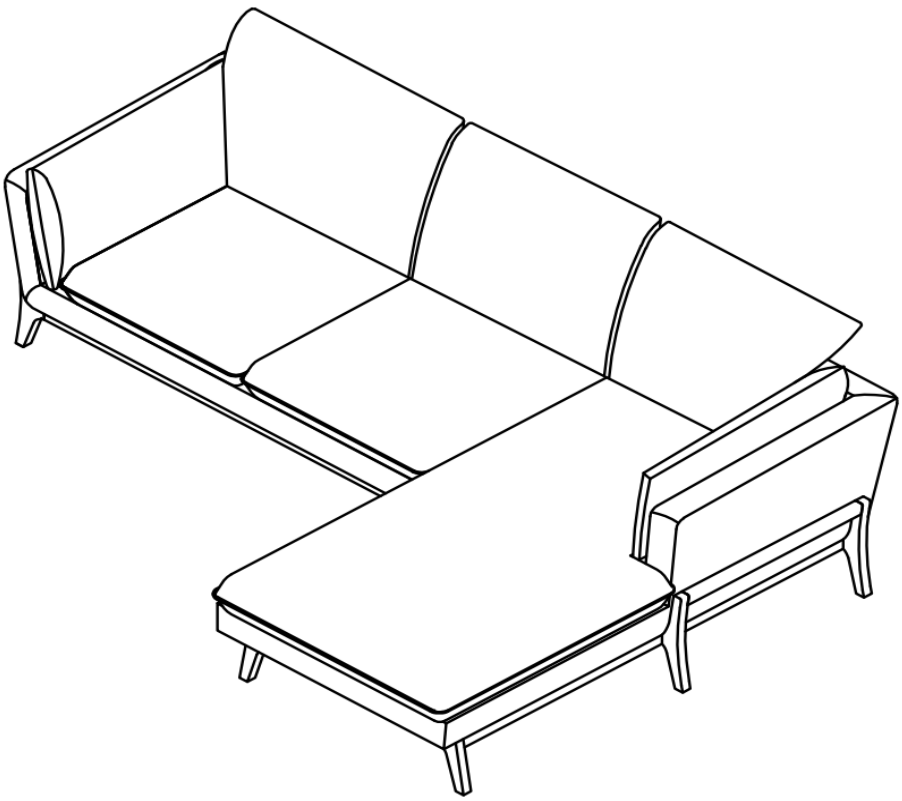

Finished!

Congratulations, we're almost there!
Please perform the following checks:

1. Ensure all bolts are tightened.
2. Do not miss bolt installation.
3. Ensure the middle leg is adjusted and extended to floor

Always lift your Castlery product when moving it to your preferred location. Levelers (if any) may slant if you drag your product.

Finally, clean the product with a clean cloth.

You're all set! Enjoy your new living space, thanks to the addition of your Castlery product.

Note: Your actual product may have minor size differences due to manual measurements.

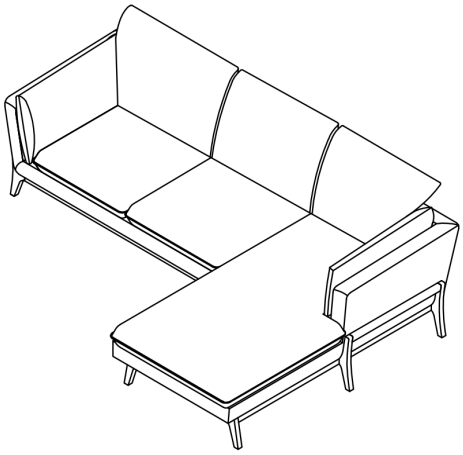

How to Disassemble?

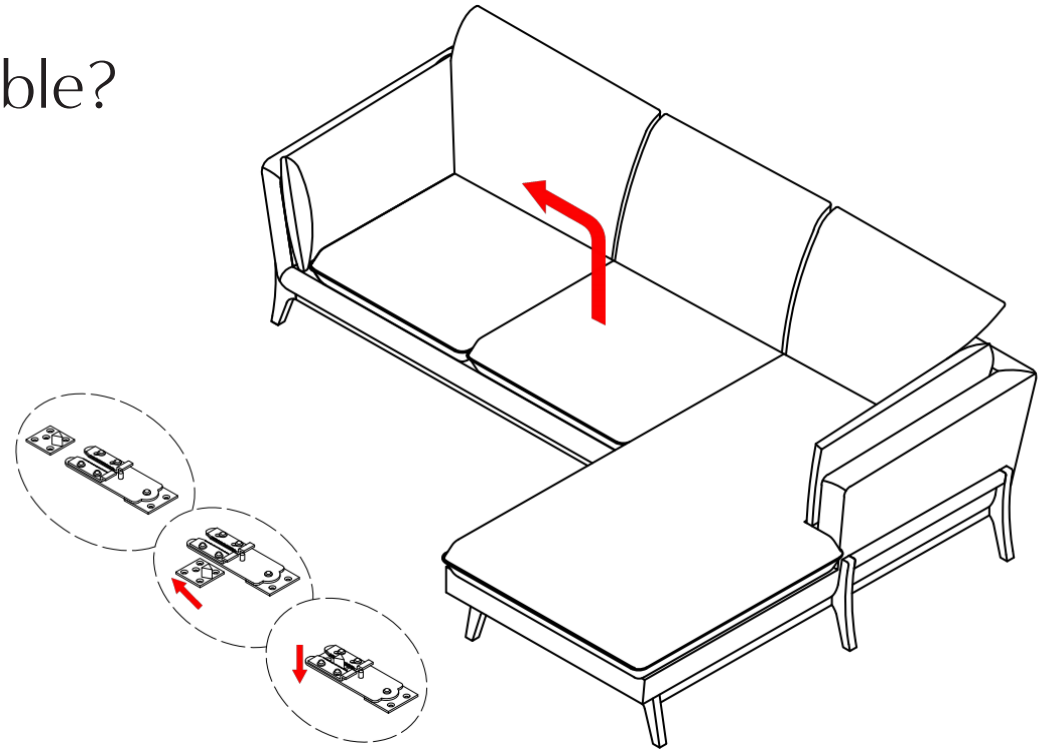

To separate,lift the part with and rotate the ratchet arm bracket back.

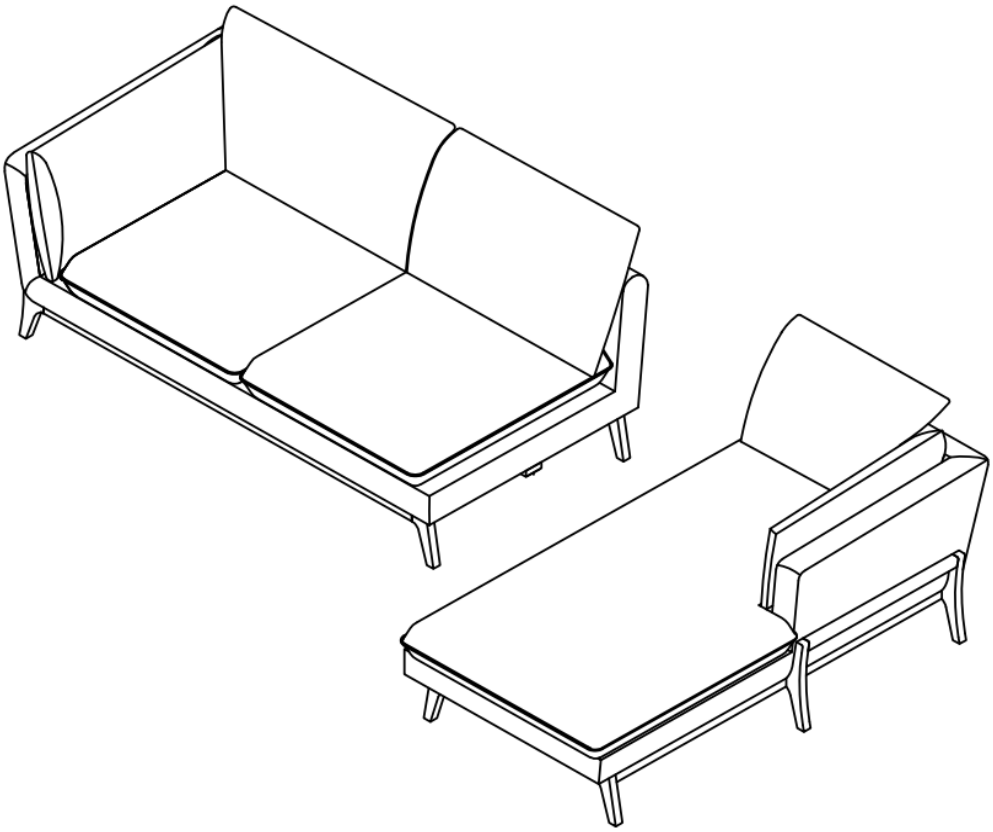

Care Instructions

Your furniture, if treated with respect and love, will last you a long time. Each piece requires light maintenance to maximize its longevity.

Fabric Sofa

General Care

- Do not sit on sofa arms and/or back frame.
- Always move the sofa by lifting it at the base, do not drag.
- Avoid prolonged exposure to direct sunlight and keep sofa away from any heating source to prevent fading or discoloration.
- Using a brush attachment, vacuum the sofa regularly to remove any dust particles.
- Blot spills immediately and gently with a clean micofiber cloth. Do not rub.
- Professional cleaning is advised for tough stains.
- Avoid sitting on the sofa when wearing clothing that may cause color transfer.
- For removable cushions, flip, rotate and fluff the seat and back cushions regularly to prolong their lifespan and keep them plump.
- For non-removable cushions, to straighten folds and creases that form on cushions after prolonged use, smooth the surface with your hands and tuck any excess upholstery into the sides of the cushions.

Fabric Care

- Pilling may occur because of wear and tear and can be easily removed with a fabric comb or fuzz remover.

Velvet Care

- Brush the velvet pile regularly to reverse the effects of wear and tear that might temporarily crush the pile.
- Avoid placing heavy objects on the sofa for long periods of time.
- To straighten light creases, set your steamer at a low heat setting and steam in the direction of the pile.

Wooden leg

- Keep legs dry at all times.
- Clean away dust or dirt with a soft,clean cloth.
- Use paste wax to preserve the wood finish.

Follow the care instructions and look after your furniture. In return, your furniture will look after you. For more information on our care instructions, visit our product website at www.castlery.com.

We hope to see you soon!