RIO OUTDOOR RECTANGULAR COFFEE TABLE

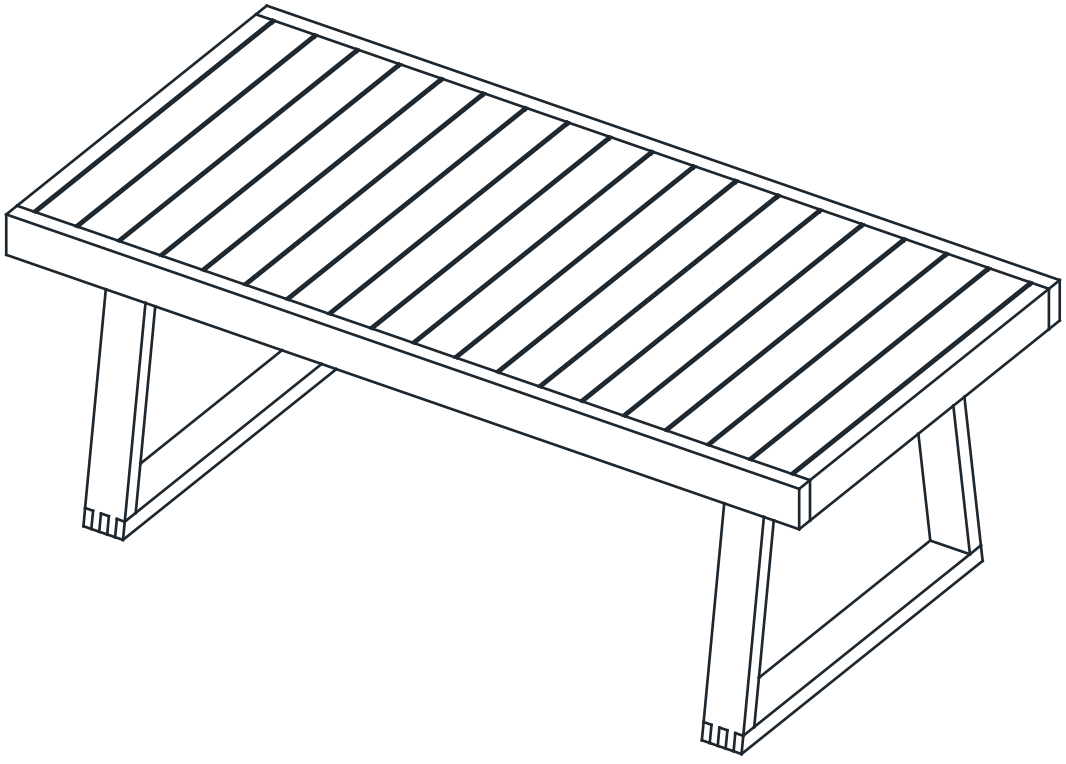

Assembly Instructions & Care Guide

CASTLERY

Hello there.

We're so glad that our Castlery product has found a home with you. As proud makers of modern, quality furniture, we’re confident that you will love and enjoy your purchase.

Setting it up is easy. Read on for a step-by-step guide to have your item assembled and ready for use.

Once you’re done, consider sharing a photo on social media or leaving us a review. We’d love to see how you've styled it in your space.

Thank you for being part of the Castlery community!

Contact us.

For any enquiries or issues regarding your purchase, you can contact us via **www.castlery.com/contact-us.**

Before you start...

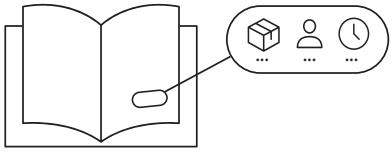

Check that you have received all cartons and familiarize yourself with the assembly requirements. This includes setting aside the allocated time required and having someone to assist you, if needed.

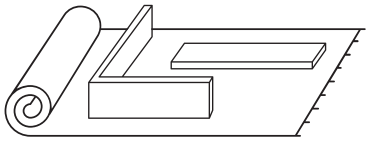

Ensure enough space for assembly. We recommend protecting your floor with a mat or cardboard to avoid scratches during the assembly process.

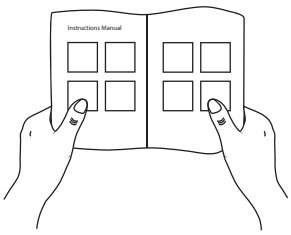

Read instructions carefully, and check that no parts are missing.

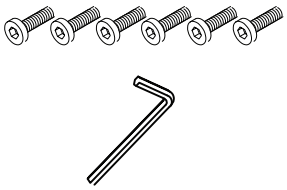

Lay out all hardware on a soft surface so you can easily identify them.

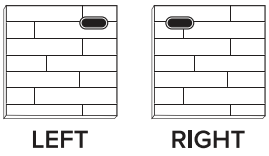

Carefully identify all components to differentiate which pieces are left and right.

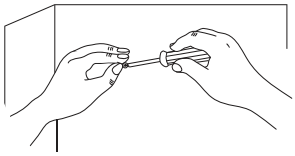

Carefully install your new product following the instructions stated. Don't skip ahead!

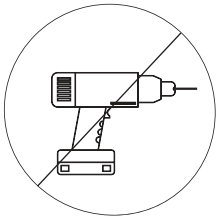

DO NOT over-tighten screws or use a drill. This will damage the product.

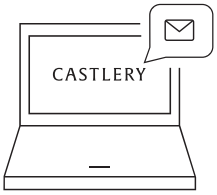

If you need further assistance, please contact us via **www.castlery.com/contact-us**.

Overview

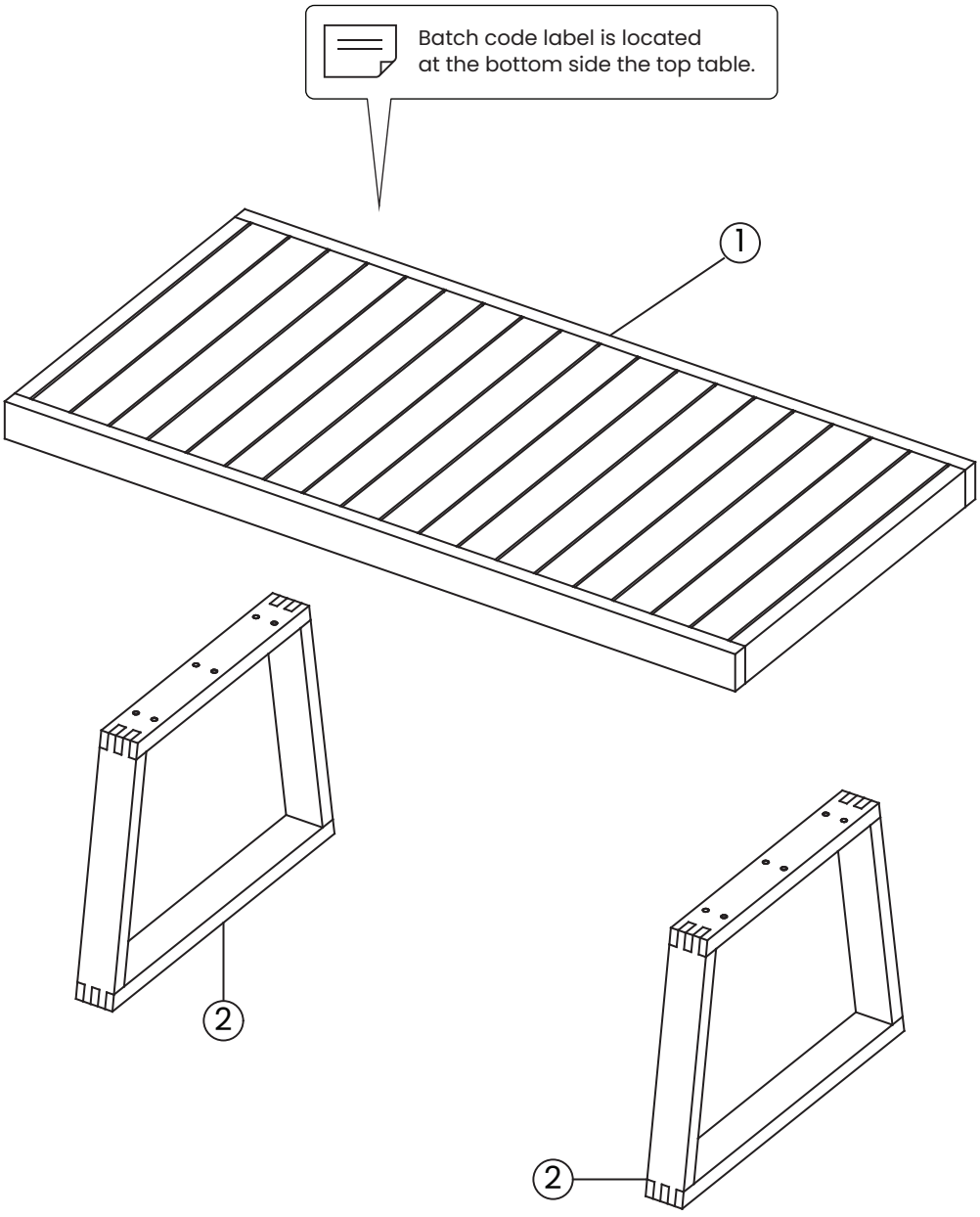
Batch code label is located
at the bottom side the top table.
1
2
2

Parts

☐ 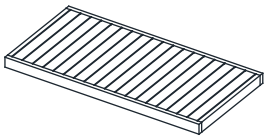 ① Top Table **x1**

☐ 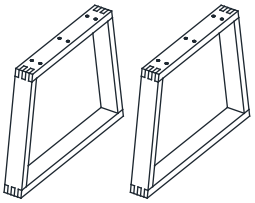 ② Legs **x2**

Hardware

☐  Ⓐ Allen Key 5mm **x1**

☐ 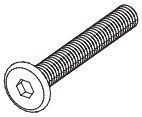 Ⓑ Bolts (M8x40) **x12**

**You might need a screwdriver (+/-) to complete this assembly.*

There are inner box(es) that include components required to complete this assembly.

Please do not completely tighten all the hardware, until each assembly step is complete.

Before discarding the packaging, please use the checklist to ensure that you have all the parts required to assemble your product. Please kindly note you will need the original package if you want to return the product later.

If parts are missing or damaged, we will gladly ship your replacements parts free of charge. Please contact us via **www.castlery.com/contact-us**.

IMPORTANT: 2 persons needed for assembly.
This will help to minimize potential damage to the product or injury to persons during assembly.

Illustrations in this guide are for reference only and may be slightly different from the actual object.

x1 **x2** **15 mins**

Step 1

This step requires 2 people.

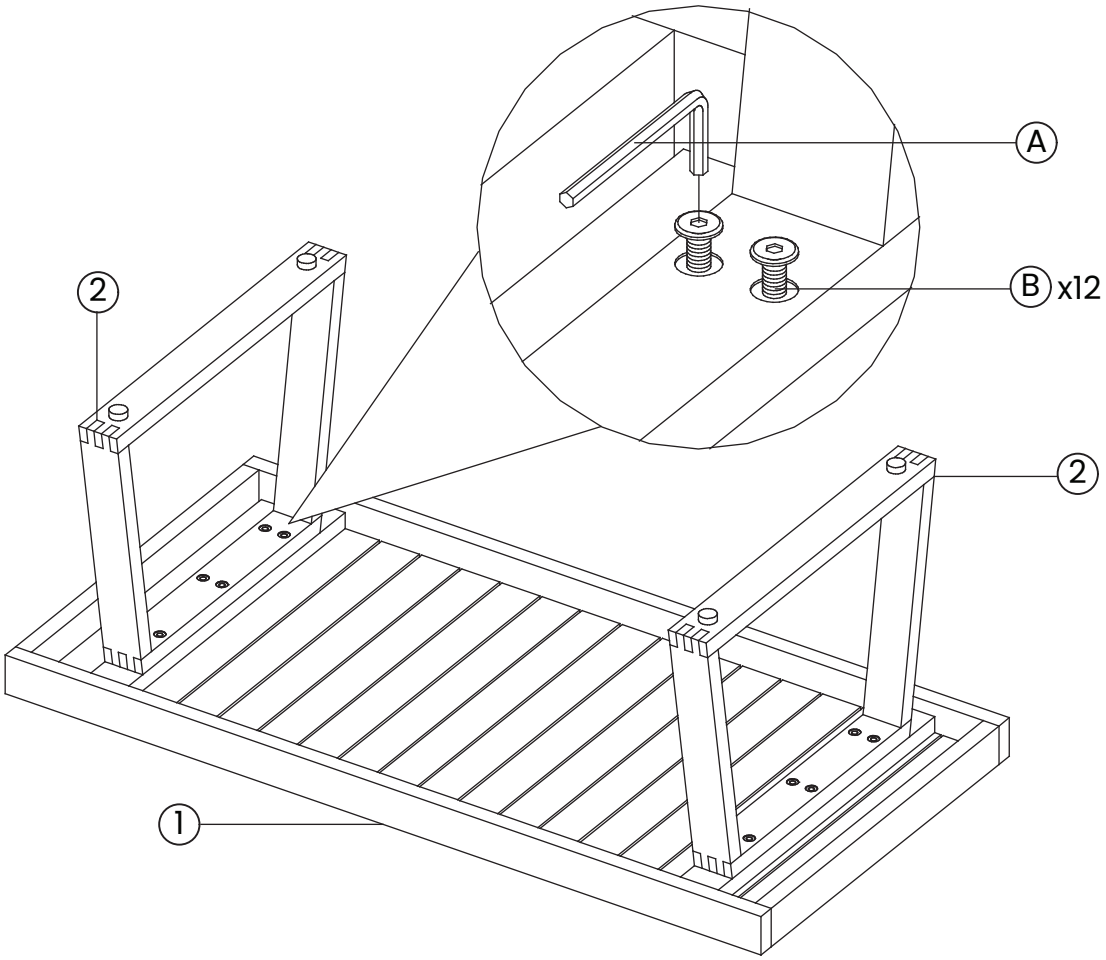

Do not tighten any bolts until all bolts are installed.

Step 2

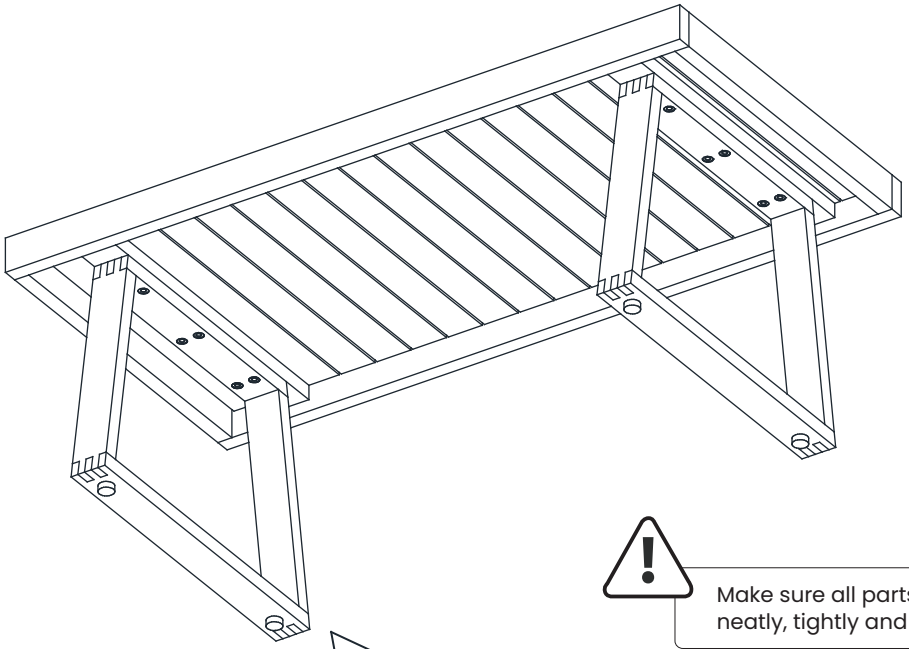

Make sure all parts are installed neatly, tightly and safe

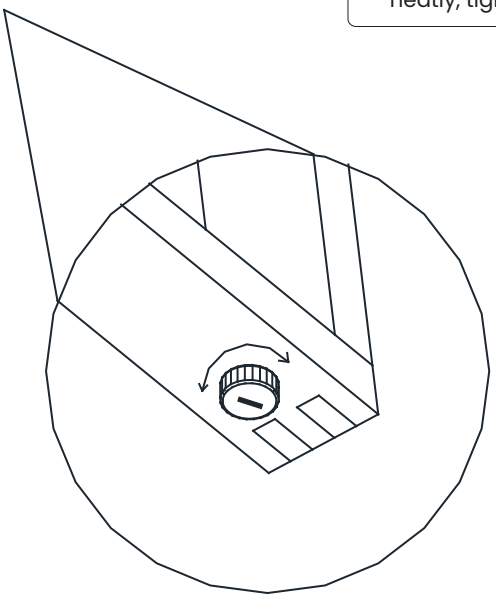

In the event of imbalance, please adjust the leveler

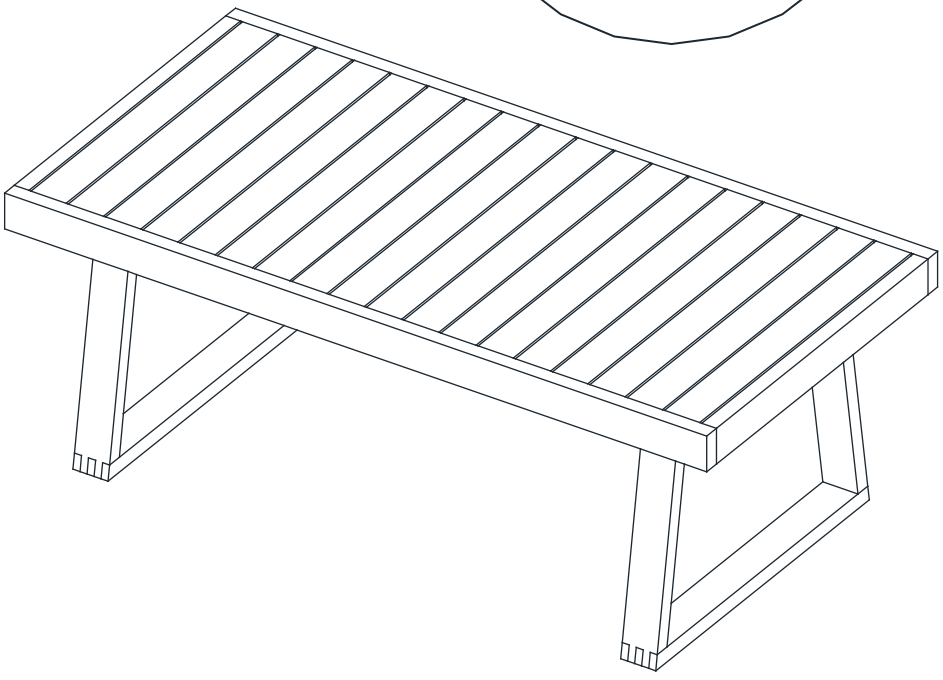

Finished!

Congratulations, we're almost there!
Please perform the following checks:

1. Have you tightened all the screws?

2. Are levelers in line with and touching the ground?

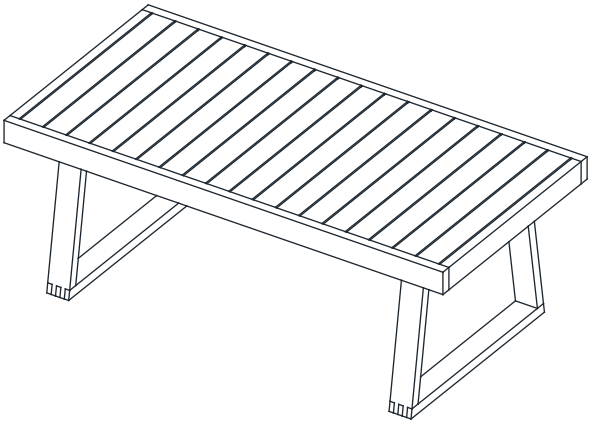

Always lift your Castlery product when moving it to your preferred location. Levelers (if any) may slant if you drag your product.

Finally, clean the product with a damp cloth.

You're all set! Enjoy your new living space, thanks to the addition of your Castlery product.

Note: Your actual product may have minor size differences due to manual measurements.

Care Instructions

Your furniture, if treated with respect and love, will last you a long time. Each piece requires light maintenance to maximize its longevity.

Do's

1. Clean the wooden table regularly with a dry, soft cloth.
2. Screws and bolts may loosen over time. Please check it regularly to tighten it.
3. Always use mats or coaters before placing food or drink on the surface.
4. Ensure product is completely dry before putting an outdoor covers.
5. To maintain the glamour of the wood, apply teak sealer or wax once every 6 to 12 months.

Don'ts

1. Do not use silicone based polishes.
2. Do not use abrasive cleaners that may damage the finishes.
3. Avoid moving the furniture in between extreme conditions such as from outdoor under the sun to indoor air conditioned room since wood will crack naturally to adapt this environment changes.

Natural Characteristics:

1. Tiny fissures or cracks may develop if there are changes in humidity and temperature. This is unavoidable and occurs naturally in solid wood furniture.
2. Natural wood knots, imperfections as well as wood grain and colour variations are to be expected for this natural teakwood.
3. Teak will naturally turn to silver gray patina color if left untreated outdoor, cover the furniture to extend the lifetime appearance or store indoors in dry and non-heated room during winters and inclement weather.
4. It is normal for teak wood to expand and contact with time and changes in weather.

Follow the care instructions and look after your furniture. In return, your furniture will look after you.