SORRENTO OUTDOOR CORNER SOFA

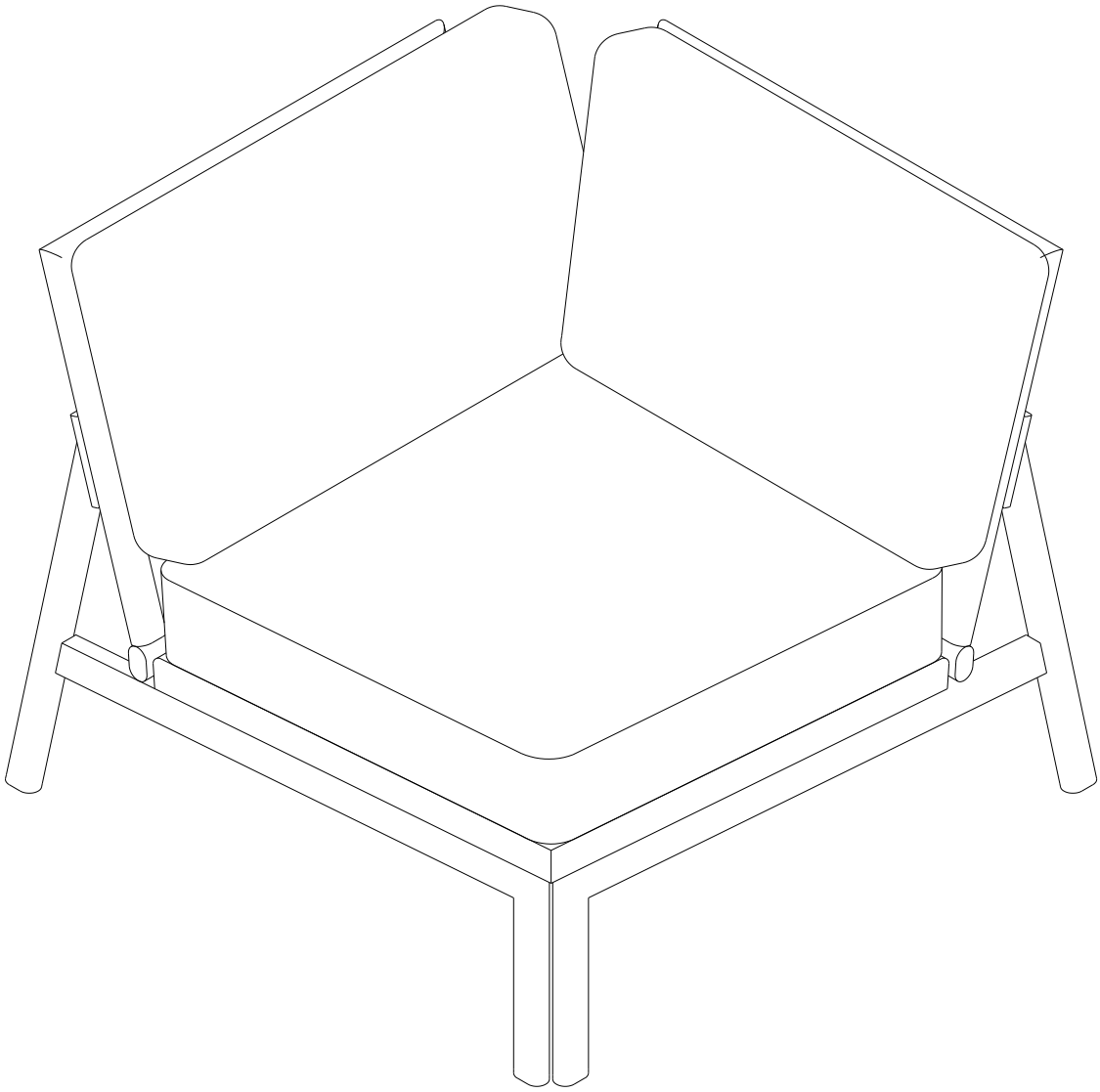

Assembly Instructions & Care Guide

CASTLERY

Hello there.

We're so glad that our Castlery product has found a home with you. As proud makers of modern, quality furniture, we’re confident that you will love and enjoy your purchase.

Setting it up is easy. Read on for a step-by-step guide to have your item assembled and ready for use.

Once you’re done, consider sharing a photo on social media or leaving us a review. We’d love to see how you've styled it in your space.

Thank you for being part of the Castlery community!

Contact us.

Should you have any questions or concerns regarding your purchase, you can contact us via **www.castlery.com/contact-us**.

Before you start...

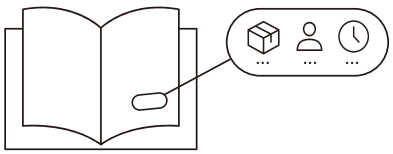

Check that you have received all cartons and familiarize yourself with the assembly requirements. This includes setting aside the allocated time required and having someone to assist you, if needed.

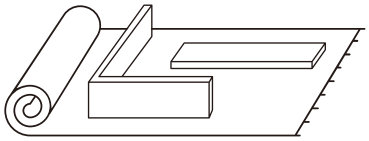

Ensure enough space for assembly. We recommend protecting your floor with a mat or cardboard to avoid scratches during the assembly process.

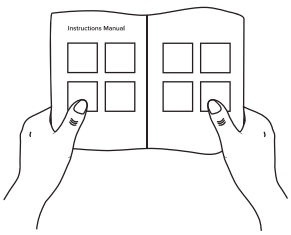

Read instructions carefully, and check that no parts are missing.

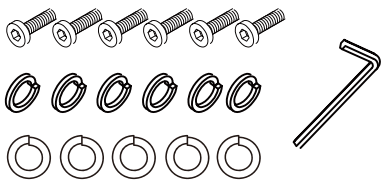

Lay out all hardware on a soft surface so you can easily identify them.

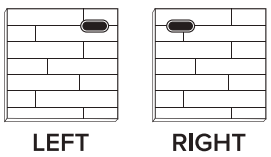

Carefully identify all components to differentiate which pieces are left and right.

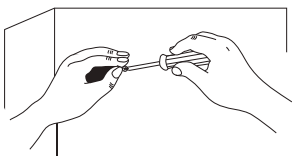

Carefully install your new product following the instructions stated. Don't skip ahead!

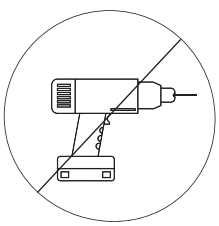

DO NOT over-tighten screws or use a drill. Only professional assemblers should use a drill.

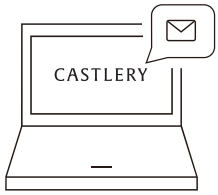

If you need further assistance, please contact us via **www.castlery.com/contact-us**.

Overview

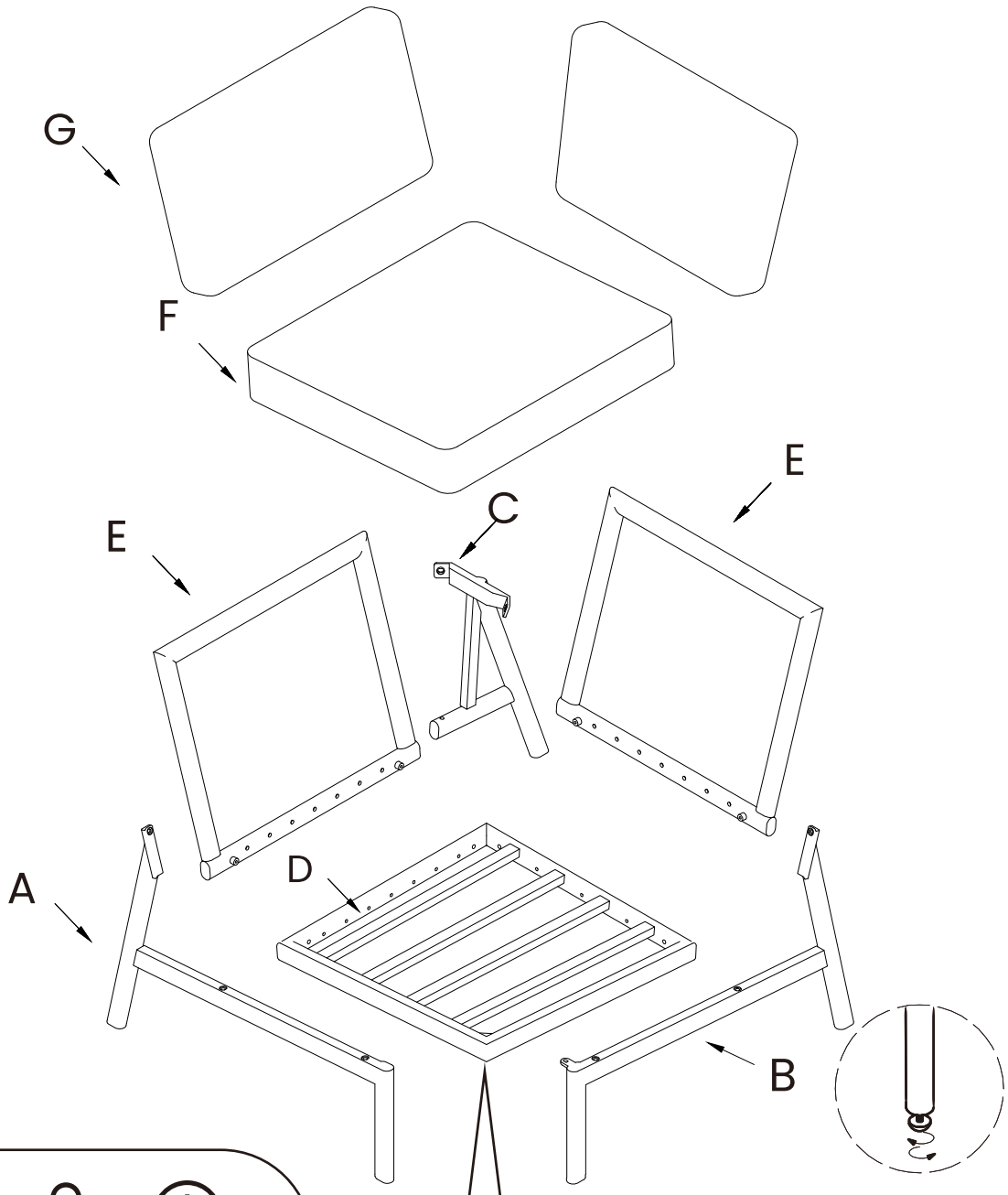

There are inner box(es) that include components required to complete this assembly.

Please do not completely tighten all the hardware, until each assembly step is complete.

Before discarding the packaging, please use the checklist to ensure that you have all the parts required to assemble your product. Please kindly note if applicable please keep the original package when you want to return the product later.

If parts are missing or damaged, we will gladly ship your replacements parts free of charge. Please contact us via **www.castlery.com/contact-us.** Illustrations in this guide are for reference only and may be slightly different from the actual object.

Parts

BOX 1 OF 1

☐ 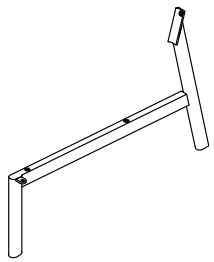

Left Armrest

A **x1**

☐ 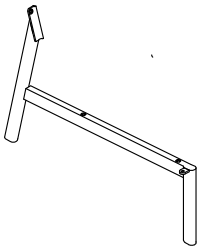

Right Armrest

B **x1**

☐ 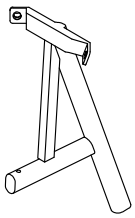

Back Leg

C **X1**

☐ 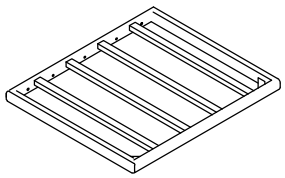

Seat Frame

D **x1**

☐ 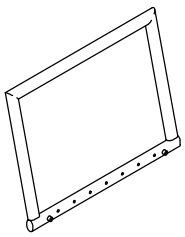

Back Frame

E **X2**

☐ 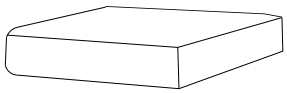

Seat Cushion

F **x1**

☐ 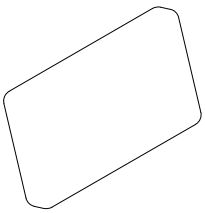

Back Cushion

G **X2**

☐ 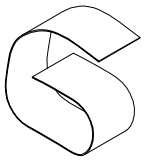

Connection Band

H **X2**

Hardware

BOX 1 OF 1

☐ 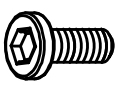

① 1/4"x3/4" Bolt

x 5

☐ 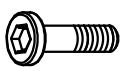

② 1/4"x2" Bolt

x 4

☐ 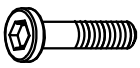

③ 1/4"x2-3/8" Bolt

x 5

☐ 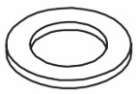

④ Flat Washer

x 14

☐ 

⑤ Allen Key

x 1

Step 1

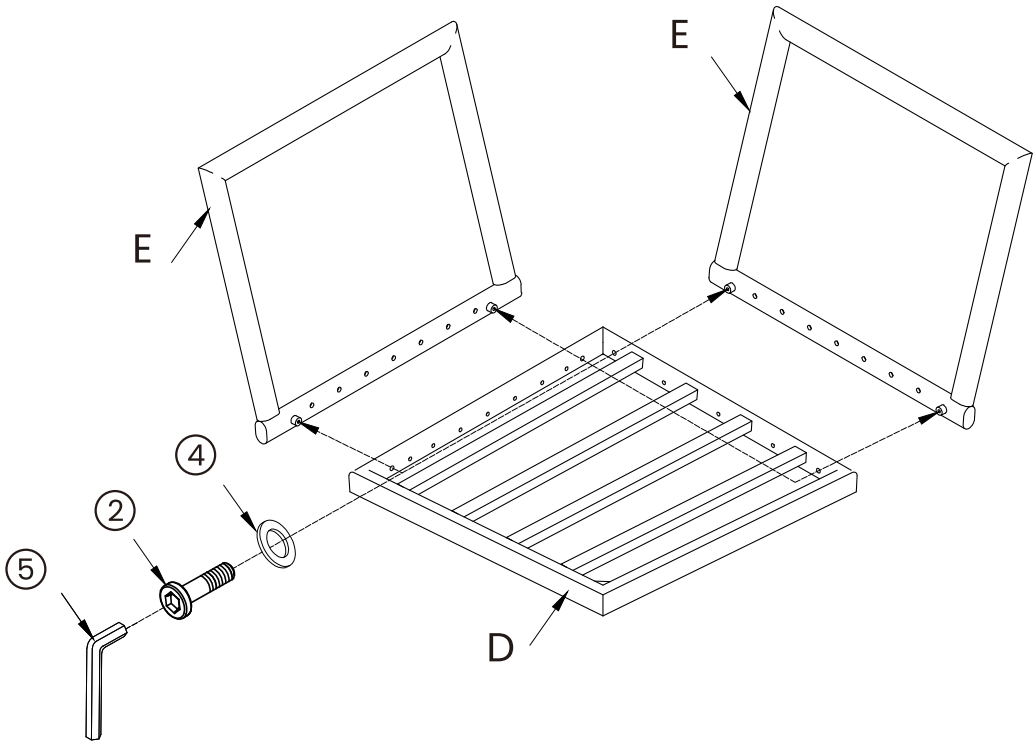

Align the holes before tightening the screws

Step 2

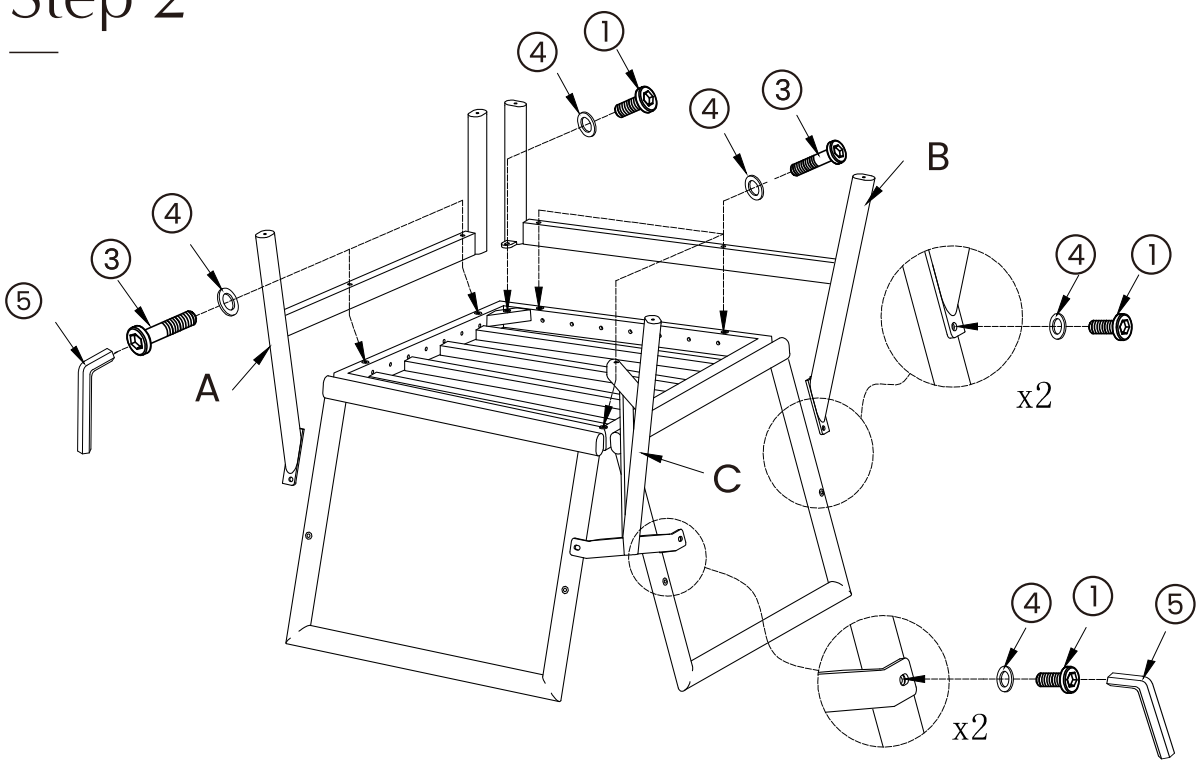

Align the holes before tightening the screws

Step 3

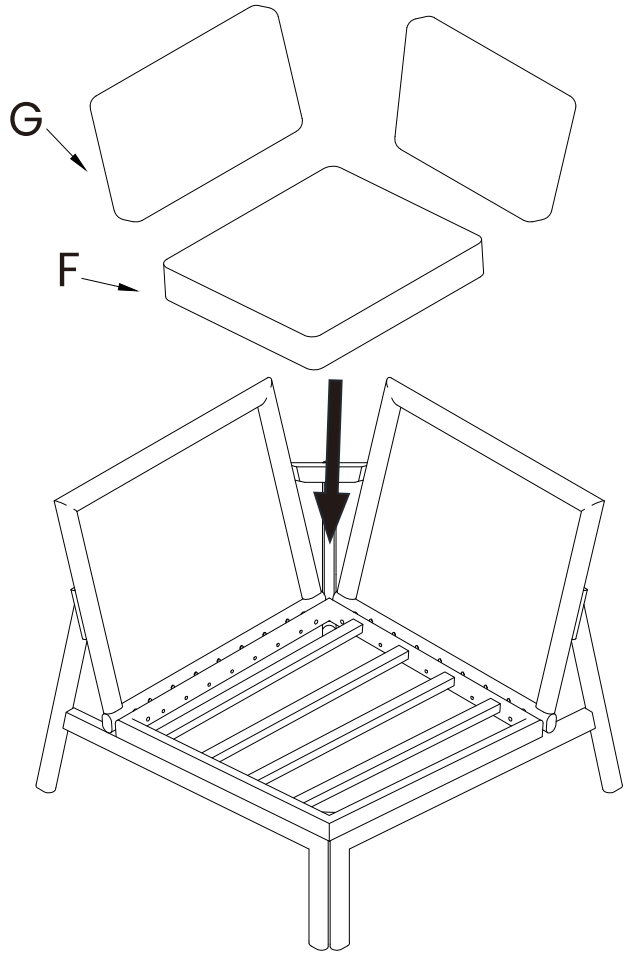

Step 4

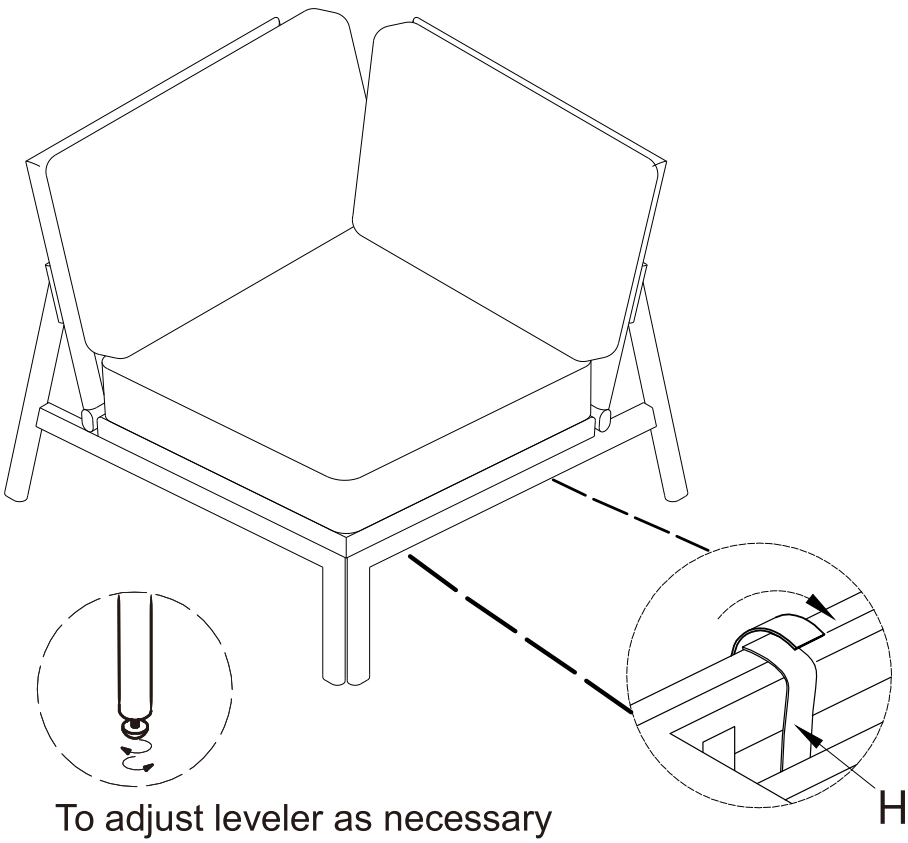

To adjust leveler as necessary

Finished!

Congratulations, we're almost there!
Please perform the following checks:

1. To ensure bolts are tightened.

Always lift your Castlery product when moving it to your preferred location. Levelers (if any) may slant if you drag your product.

Finally, dust the product with a clean cloth(if needed)

You're all set! Enjoy your new living space, thanks to the addition of your Castlery product.

Note: Your actual product may have minor size differences due to manual measurements.

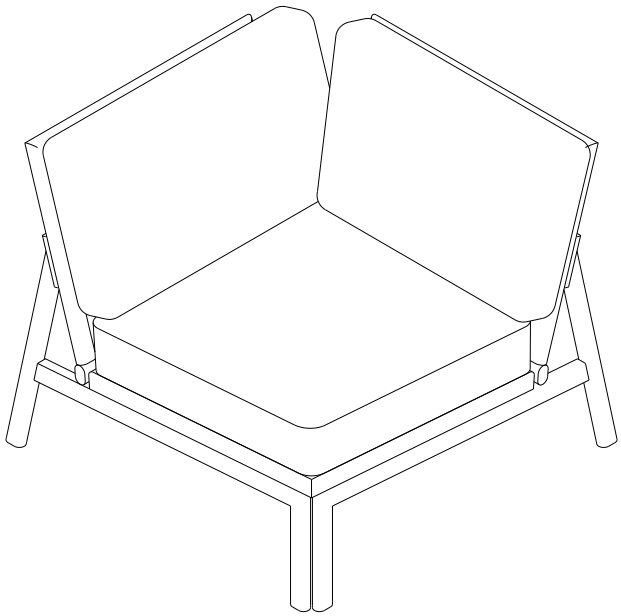

Care Instructions

Your furniture, if treated with respect and love, will last you a long time. Each piece requires light maintenance to maximize its longevity.

Outdoor Sofa & Chair Care

- Keep cushions free of dirt and foliage.
- To prevent mildew from forming, stand cushions on one end and let them dry completely before storing.
- Cushion covers are removable for easy cleaning.
- Do not machine wash or tumble dry.
- To clean cushions, wipe away loose dirt, then use a sponge or soft bristle brush to clean the dirty area with mild soap and lukewarm water. Rinse thoroughly and allow to air dry.
- Clean frame with warm, soapy water and rinse thoroughly with cold water.
- Periodically check that all connections are tightly-secured.
- Avoid using high pressure cleaners or harsh chemicals.
- Ensure product is completely dry before putting on outdoor covers.

Please Note:

- This fabric is not waterproof. To prolong the lifespan of the furniture, keep item covered when not in use & store indoors during winter and inclement weather.
- Extended exposure to sunlight and extreme weather conditions could result in discolouration or damage.

Follow the care instructions and look after your furniture. In return, your furniture will look after you. For more information on our care instructions, visit our product website at www.castlery.com.

We hope to see you soon!