Cedric Table Lamp (SG Ver)

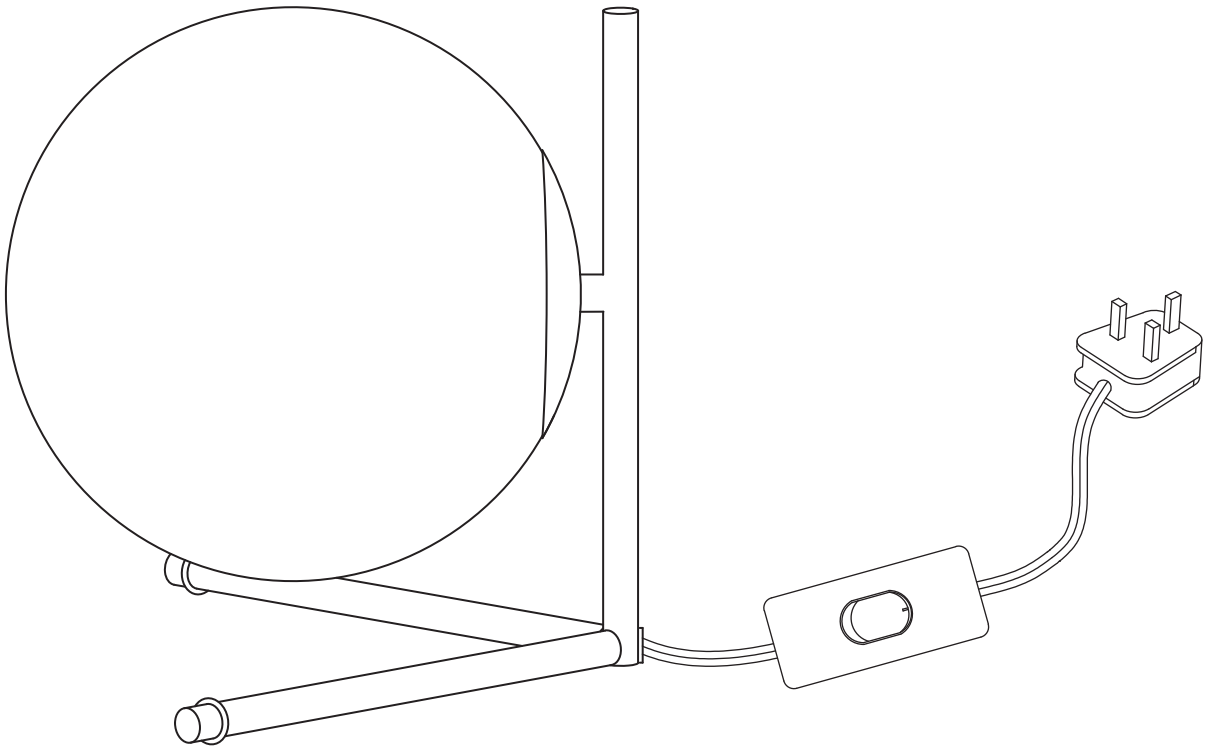

Assembly Instructions & Care Guide

CASTLERY

Hello there.

We're so glad that our Castlery product has found a home with you. As proud makers of modern, quality furniture, we're confident that you will love and enjoy your purchase.

Setting it up is easy. Read on for a step-by-step guide to have your item assembled and ready for use.

Once you're done, consider sharing a photo on social media or leaving us a review. We'd love to see how you've styled it in your space.

Thank you for being part of the Castlery community!

Contact us.

For any enquiries or issues regarding your purchase, you can contact us via **www.castlery.com/contact-us.**

Before you start...

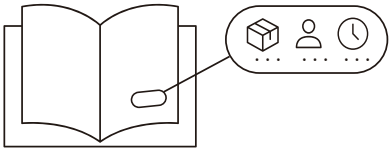

Check that you have received all cartons and familiarize yourself with the assembly requirements. This includes setting aside the allocated time required and having someone to assist you, if needed.

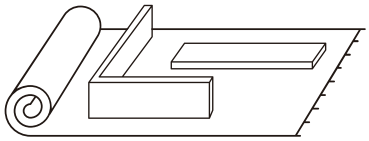

Ensure enough space for assembly. We recommend protecting your floor with a mat or cardboard to avoid scratches during the assembly process.

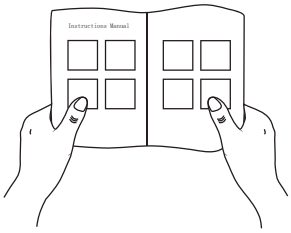

Read instructions carefully, and check that no parts are missing.

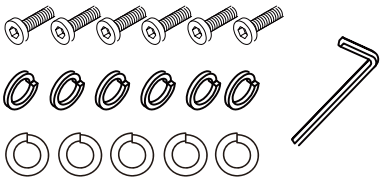

Lay out all hardware on a soft surface so you can easily identify them.

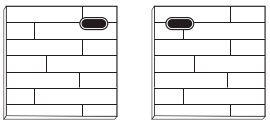

Carefully identify all components to differentiate which pieces are left and right.

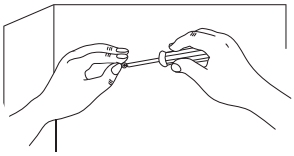

Carefully install your new product following the instructions stated. Don't skip ahead!

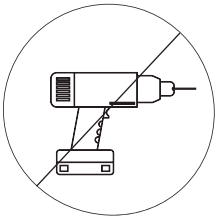

DO NOT over-tighten screws or use a drill.
Only professional assemblers should use a drill.

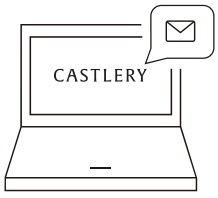

If you need further assistance, please contact us via **www.castlery.com/contact-us**.

Overview

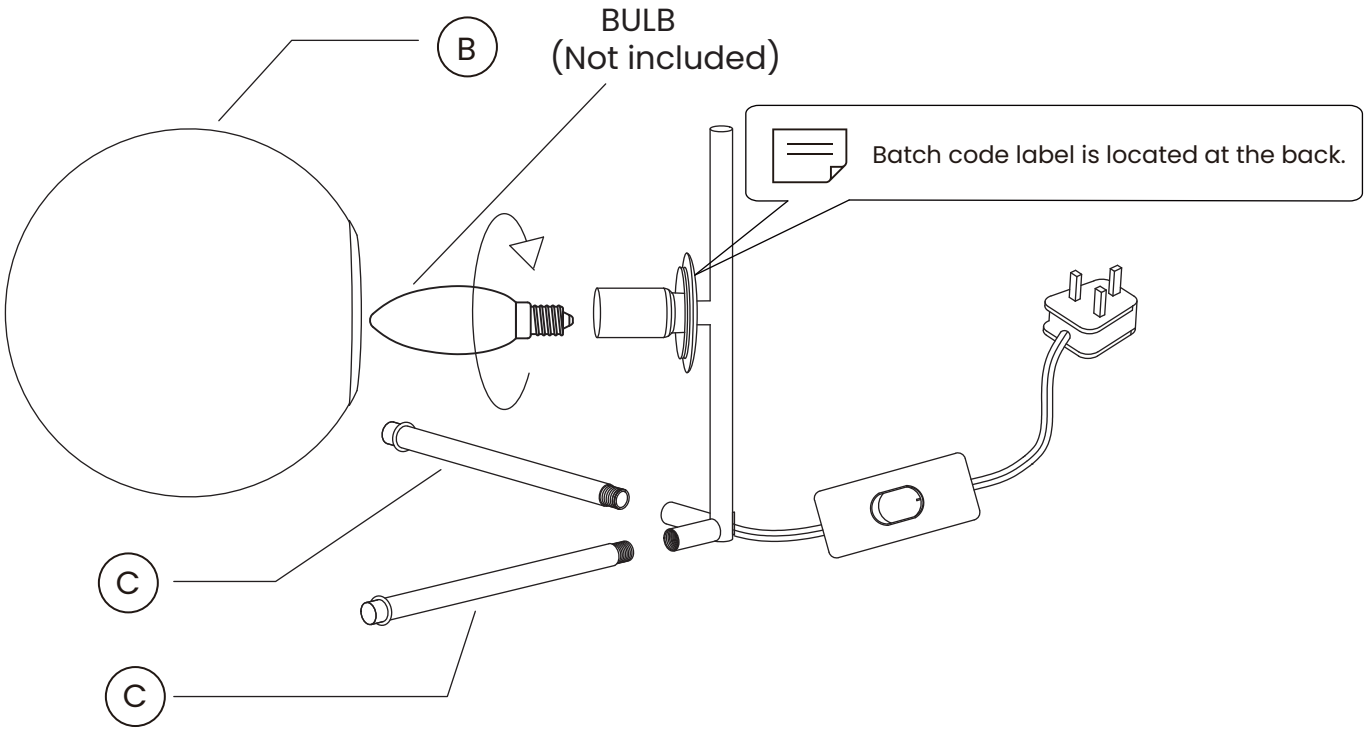

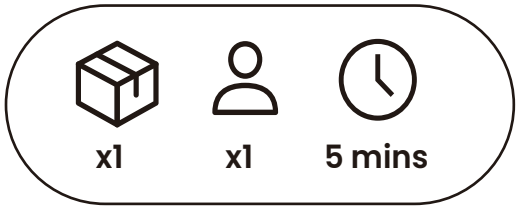

There are inner box(es) that include components required to complete this assembly.

Please do not completely tighten all the hardware, until each assembly step is complete.

Before discarding the packaging, please use the checklist to ensure that you have all the parts required to assemble your product. Please kindly note you will need the original package if you want to return the product later.

If parts are missing or damaged, we will gladly ship your replacements parts free of charge. Please contact us via **www.castlery.com/contact-us.** Illustrations in this guide are for reference only and may be slightly different from the actual object.

Parts

BOX 1 OF 1

☐ 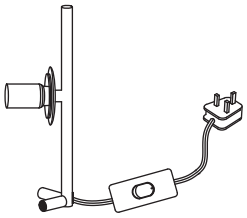

Ⓐ Base **x1**

☐ 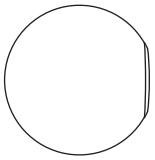

Ⓑ Glass Lamp Shade **x1**

☐ 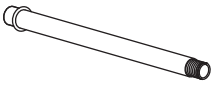

Ⓒ Leg **x2**

Product information

- Indoor use only
- Non-dimmable
- Clean the fitting with a soft dry cloth
- It is recommended to use the product in indoor temperature less than 40 degrees

---

Step 1

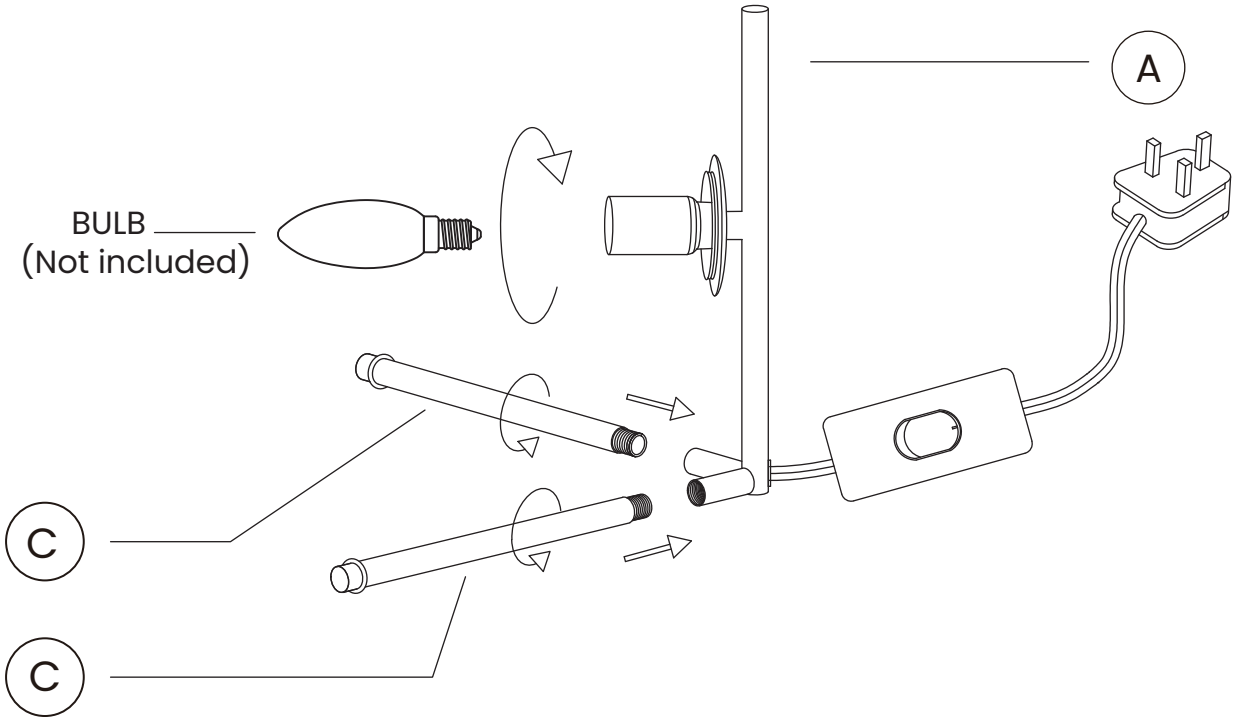

Step 2

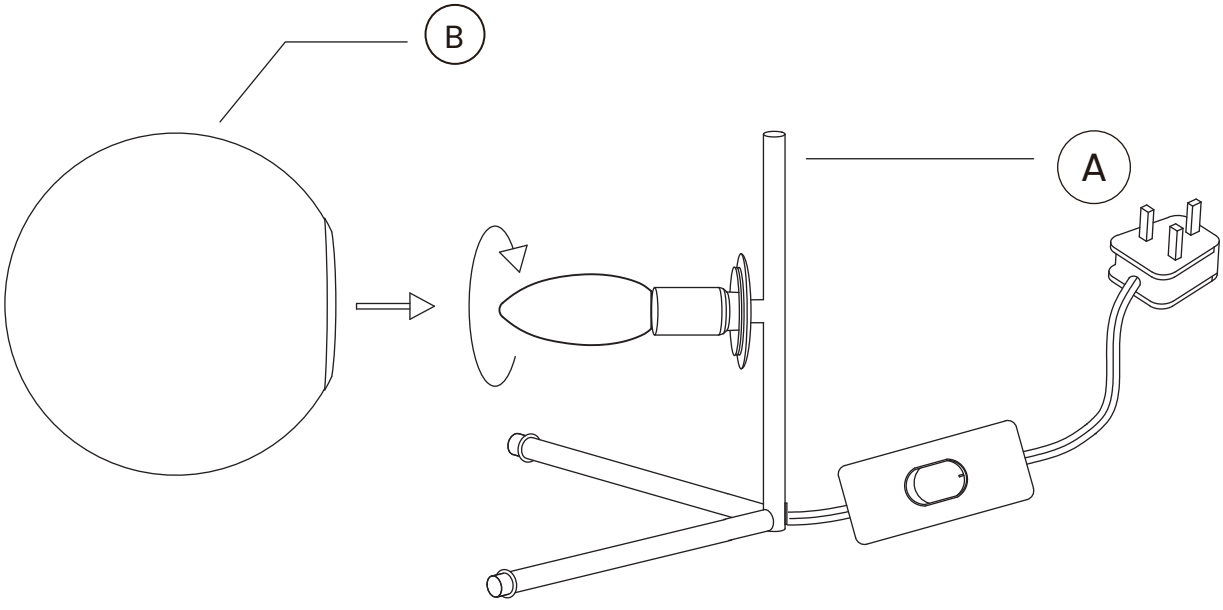

Step 3

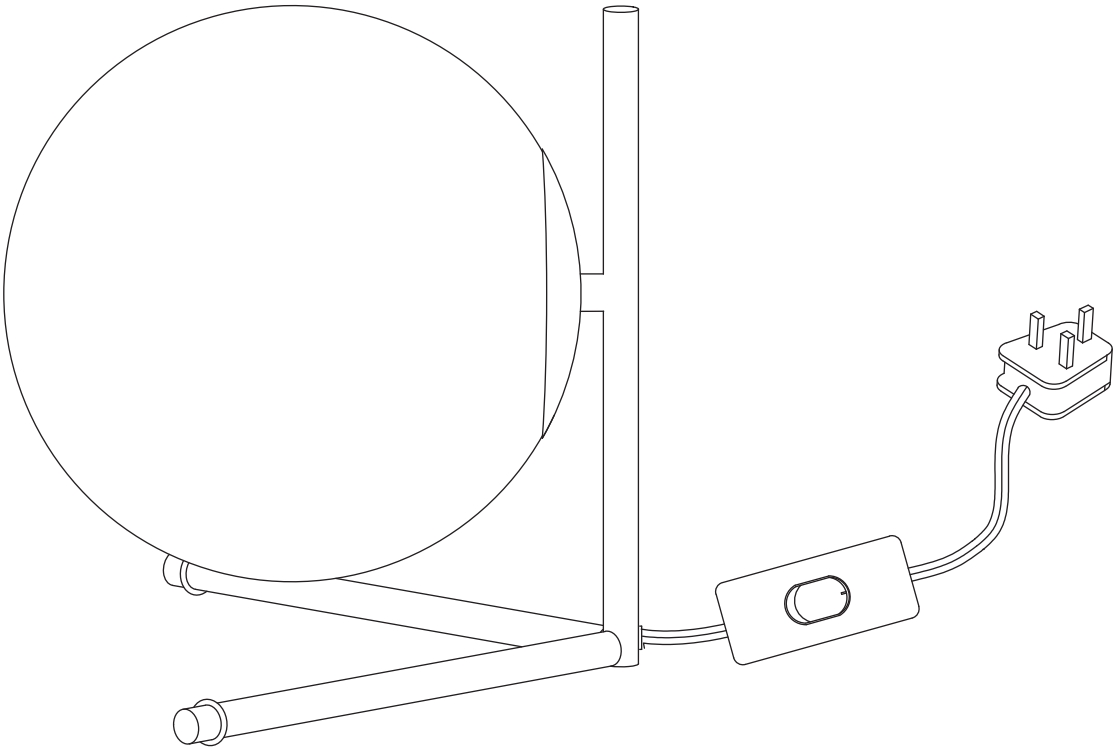

Finished!

Congratulations, we're almost there!
<u>Please perform the following checks:</u>

1. Ensure all bolts are tightened.
2. Do not miss bolts installation.

When moving to your preferred position, you need to lift the bottom of your product to move it .Levelers (if any) may slant if you drag your product.

Finally, clean the product with a soft dry cloth.

You're all set! Enjoy your new living space, thanks to the addition of your Castlery product.

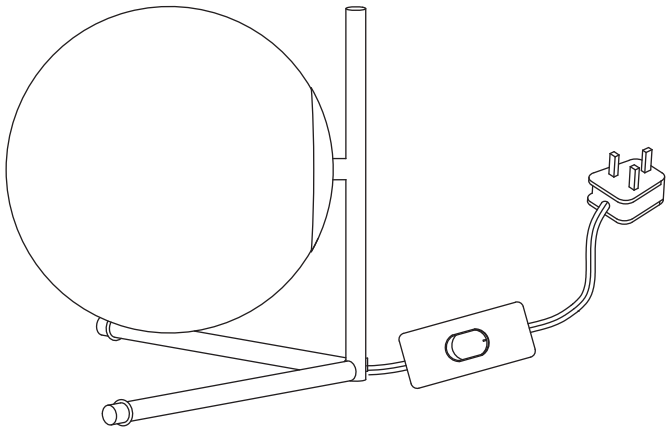

Note: Your actual product may have minor size differences due to manual measurements.

Care Instructions

Your Lighting, if treated with respect and love, will last you a long time. Each piece requires light maintenance to maximize its longevity.

Lighting Care

1.Always switch off the electricity and allow it to cool before cleaning or replacing the light bulb.

2.Always handle the lamp with clean hands or protective gloves.

3.Remove the diffuser before cleaning the lamp using a feather duster or soft white cloth.

4.Ensure cleaning materials used are grit-free to prevent leaving scratches on the lamp shade.

5.Avoid using glass cleaners,abrasive cleaners,or bleach as they may cause disco-louration on the shade.

6.Ensure light bulb is centred inside each shade and does not touch the shade sides.

7.The lamp can hold an E14 LED light bulb up to 6 Watt maximum. However,do not exceed the recommended wattage to prevent risk of fire.

8.If the external flexible cable or cord of this luminaire is damaged,it shall be exclusively replaced by the manufacturer or his service agent or a similar qualified person in order to avoid a hazard.

Follow the care instructions and look after your Lighting. In return, your Lighting will look after you. For more information on our care instructions, visit our product website at www.castlery.com

We hope to see you soon!