SLOANE
6-DRAWER DRESSER

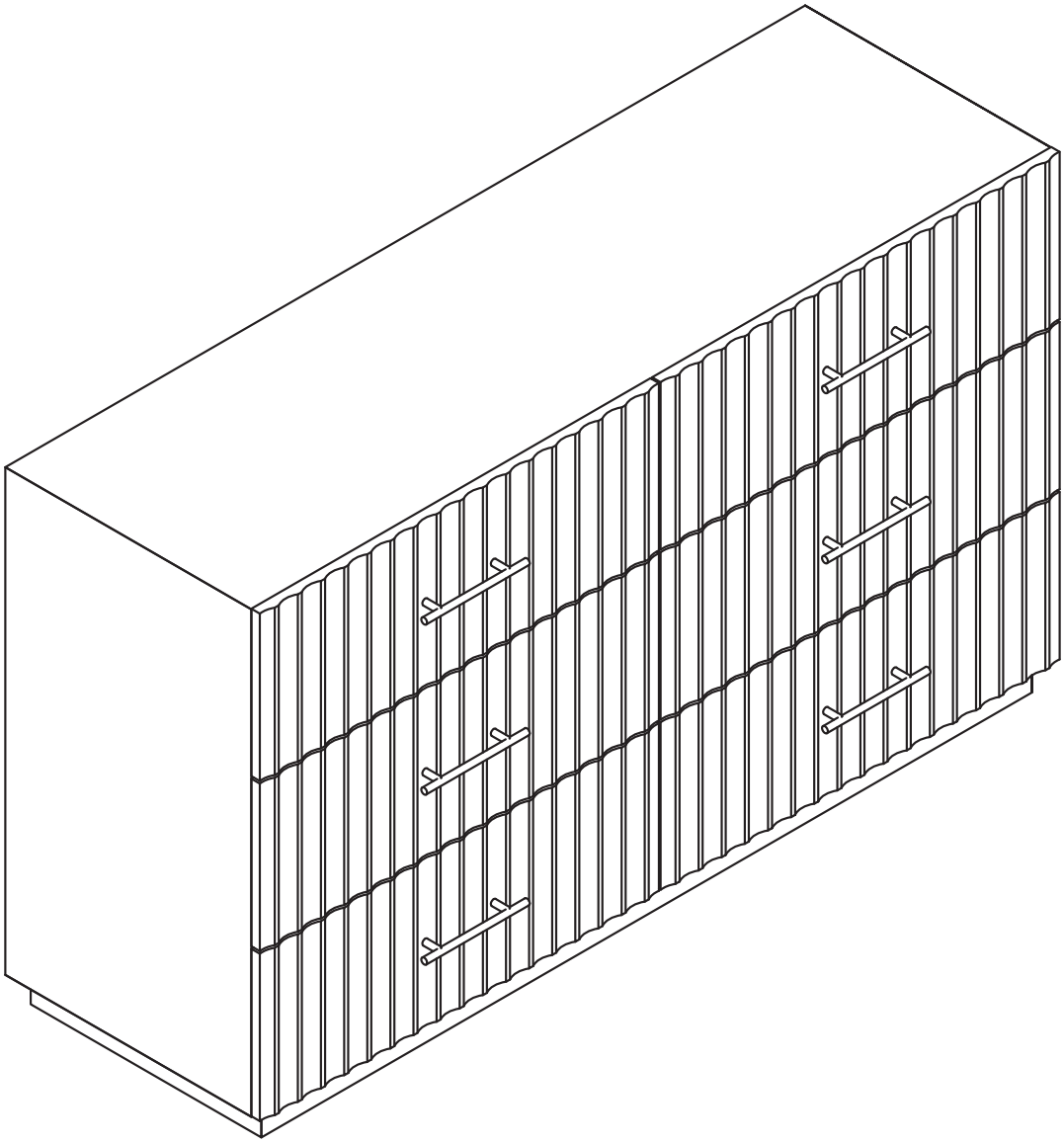

Assembly Instructions & Care Guide

CASTLERY

Hello there.

We're so glad that our Castlery product has found a home with you. As proud makers of modern, quality furniture, we're confident that you will love and enjoy your purchase.

Setting it up is easy. Read on for a step-by-step guide to have your item assembled and ready for use.

Once you're done, consider sharing a photo on social media or leaving us a review. We'd love to see how you've styled it in your space.

Thank you for being part of the Castlery community!

Contact us.

For any enquiries or issues regarding your purchase, you can contact us via **www.castlery.com/contact-us.**

Before you start...

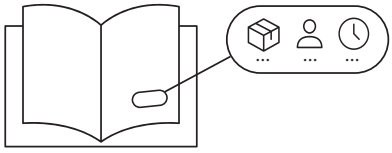

Check that you have received all cartons and familiarize yourself with the assembly requirements. This includes setting aside the allocated time required and having someone to assist you, if needed.

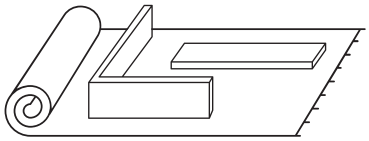

Ensure enough space for assembly. We recommend protecting your floor with a mat or cardboard to avoid scratches during the assembly process.

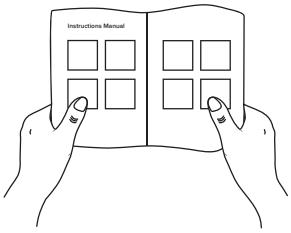

Read instructions carefully, and check that no parts are missing.

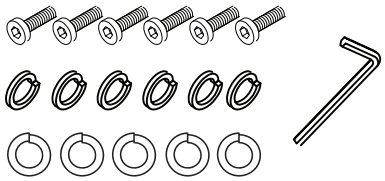

Lay out all hardware on a soft surface so you can easily identify them.

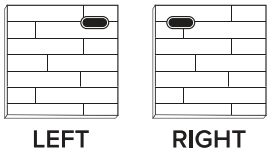

Carefully identify all components to differentiate which pieces are left and right.

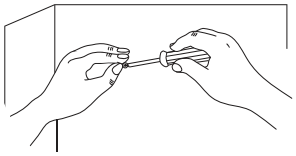

Carefully install your new product following the instructions stated. Don't skip ahead!

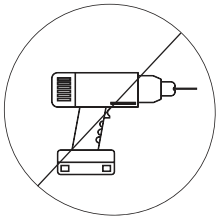

DO NOT over-tighten screws or use a drill.
This will damage the product.

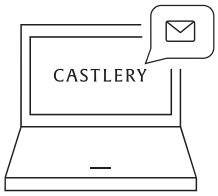

If you need further assistance, please contact us via **www.castlery.com/contact-us**.

Overview

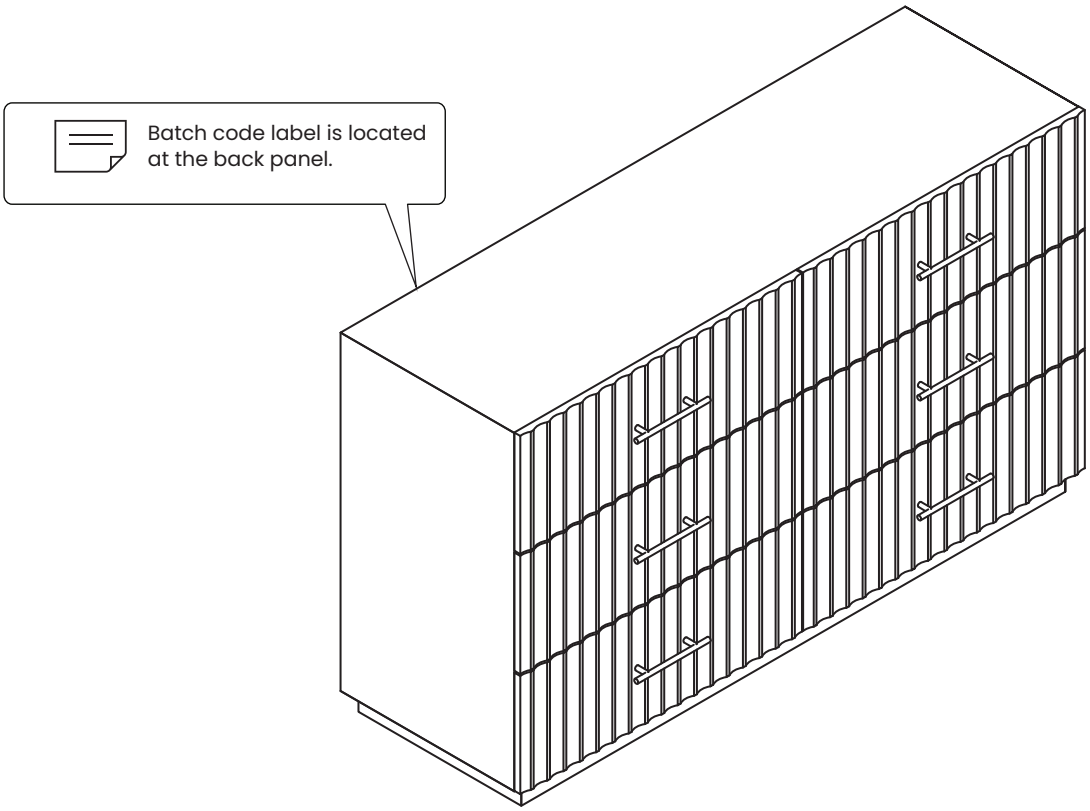

Parts

BOX 1 OF 1

☐

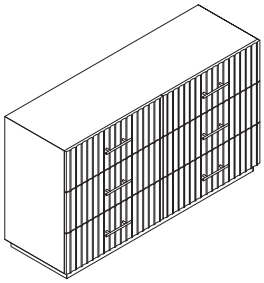

① Body

x1

Hardware

BOX 1 OF 1

☐ Ⓐ Screw M3.5*15mm **x2**

☐ Ⓑ Screw M3.5*50mm **x2**

☐ Ⓒ Bracket **x4**

☐ 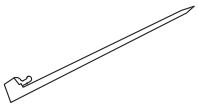 Ⓓ Strap **x2**

**You might need a screwdriver (+/-) to complete this assembly.*

There are inner box(es) that include components required to complete this assembly.

Please do not completely tighten all the hardware, until each assembly step is complete.

Before discarding the packaging, please use the checklist to ensure that you have all the parts required to assemble your product. Please kindly note you will need the original package if you want to return the product later.

If parts are missing or damaged, we will gladly ship your replacements parts free of charge. Please contact us via **www.castlery.com/contact-us.**

IMPORTANT: 2 persons needed for assembly.
This will help to minimize potential damage to the product or injury to persons during assembly.

Illustrations in this guide are for reference only and may be slightly different from the actual object.

x1 **x2** **20 mins**

Step 1

This step requires 2 people.

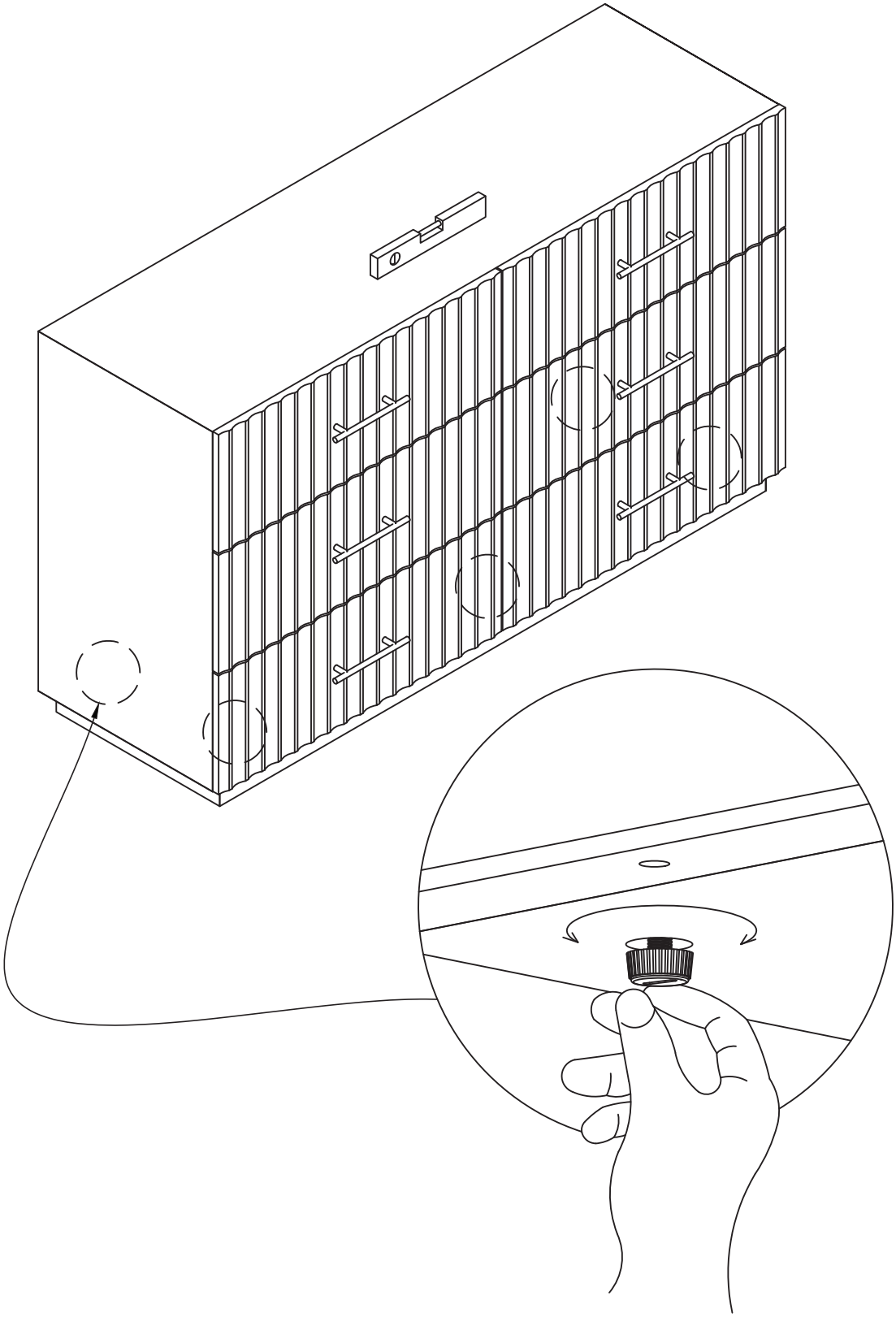

Finished!

Congratulations, we're almost there!
Please perform the following checks:

1. Have you tightened all the screws?
2. Are levelers in line with and touching the ground?
3. Have you installed the anti-tipping kit?

Always lift your Castlery product when moving it to your preferred location. Levelers (if any) may slant if you drag your product.

Finally, clean the product with a damp cloth.

You're all set! Enjoy your new living space, thanks to the addition of your Castlery product.

Note: Your actual product may have minor size differences due to manual measurements.

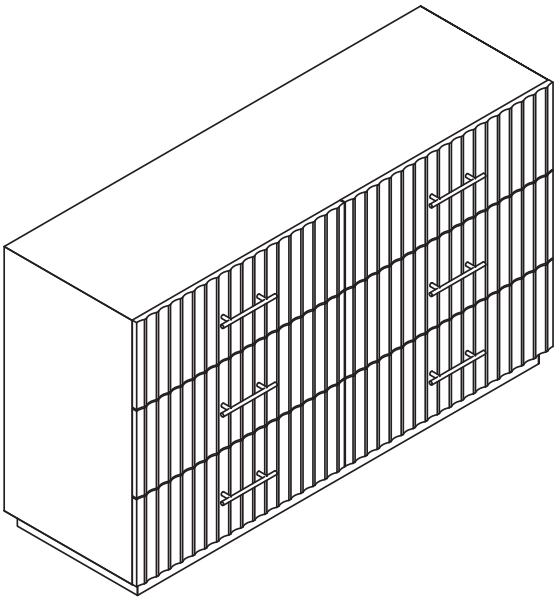

Anti-tip Kit
Assembly Instruction

To prevent injury and property damage from unexpected tipping of furniture, we highly recommend installation of the anti-tip kit included with this product.

Step 1

Determine where the piece is to be placed and mark location on the wall for the mounting bracket screw holes. They should be placed approximately 1" below the top on the back of the piece of furniture.

*Repeat for all 2 screws.

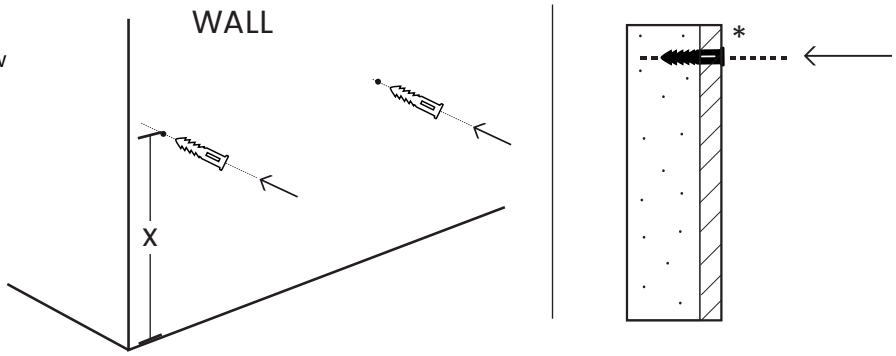

Step 2

Attach the mounting bracket vertically/ horizontally to the wall by inserting the long screws provided through the holes in the bracket and tightening securely using screw-driver. Screws must penetrate wall studs for proper installation.

*Repeat for all 2 screws.

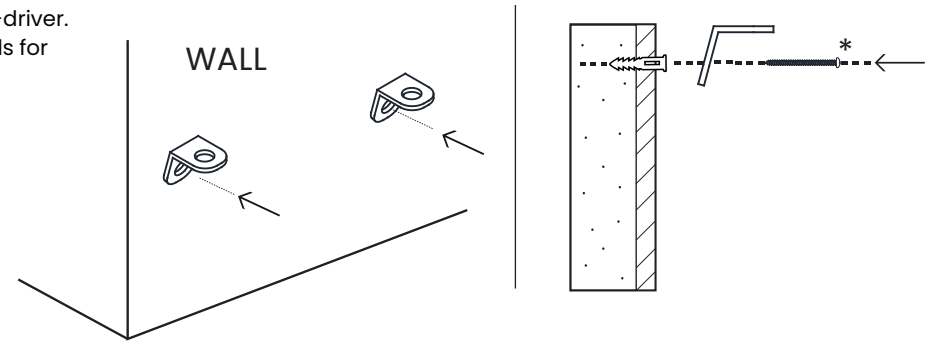

wall screws x2

Bracket x2

Please seek a professional advice if unsure of wall constructions. Properly affixing furniture to your wall will depend on the wall material: concrete, drywall, masonry, or wood will require the appropriate hardware. Anchor is not provided, please source the right anchor according to the wall type. Please consult your local hardware store to ensure you are using the correct hardware for your wall type.

Step 3

Next using the short screws attach the 2nd bracket to the back of the piece of furniture's top.

wood screws x2

Bracket x2

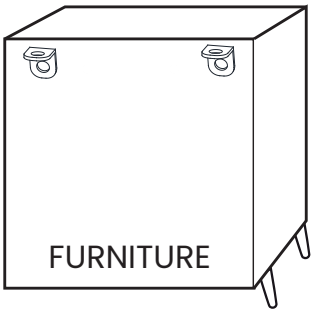

*Repeat for all 2 screws.

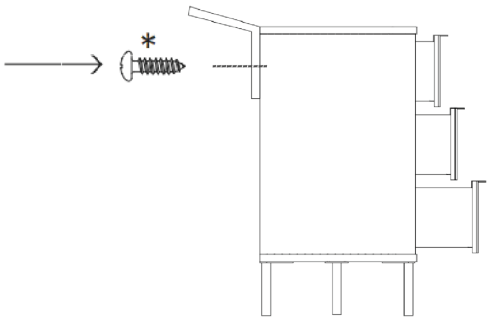

Step 4

Lace the nylon strap down through the brackets. Slide the thin end of the strap through the receiving end of the nylon strap. Pull to tighten the piece of furniture snug against wall.

restraint straps x2

WALL FURNITURE

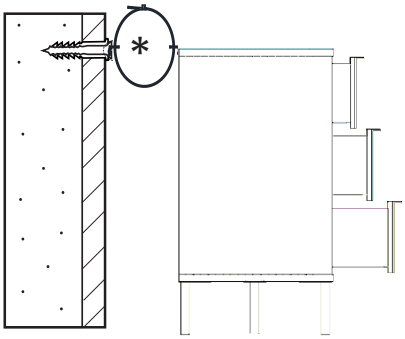

Press down to unlock; release to lock.

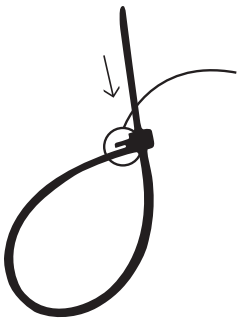

- This anti-tip kit is not a substitute for proper adult supervision.
- This anti-tip kit may provide protection against tipping furniture.
- Do not allow children to climb on furniture.
- By installing anti-tip kit, you acknowledge that you are fully aware of the safety requirements and accept to adhere to it.
- Illustrations in this guide are for reference only and may be slightly different from the actual object.

Care Instructions

Your furniture, if treated with respect and love, will last you a long time. Each piece requires light maintenance to maximize its longevity.

- Dust with a soft, dry cloth and clean with a slightly damp cloth.
- Avoid abrasive cleaners & placing rough or sharp objects on the surface.
- Keep furniture away from direct heat or sunlight.
- Wipe spills immediately.
- Use coasters or placemats where possible, to prevent discolouration of the surface.
- Lift when moving, do not drag.
- Periodically check that all connections are tightly-secured.

Follow the care instructions and look after your furniture. In return, your furniture will look after you. For more information on our care instructions, visit our product website at www.castlery.com.

We hope to see you soon!

WARNING

We strongly recommend to permanently fix this product to a wall or other suitable surface.

Children have died from furniture tipover. To reduce the risk of furniture tipover:

- ALWAYS install anti-tip device provided.
- NEVER put a TV on this product.
- NEVER allow children to stand, climb, or hang on any drawers, doors, or shelves.
- NEVER open more than one drawer at a time.
- Place heavy items down low.