NICO
ROUND COFFEE TABLE

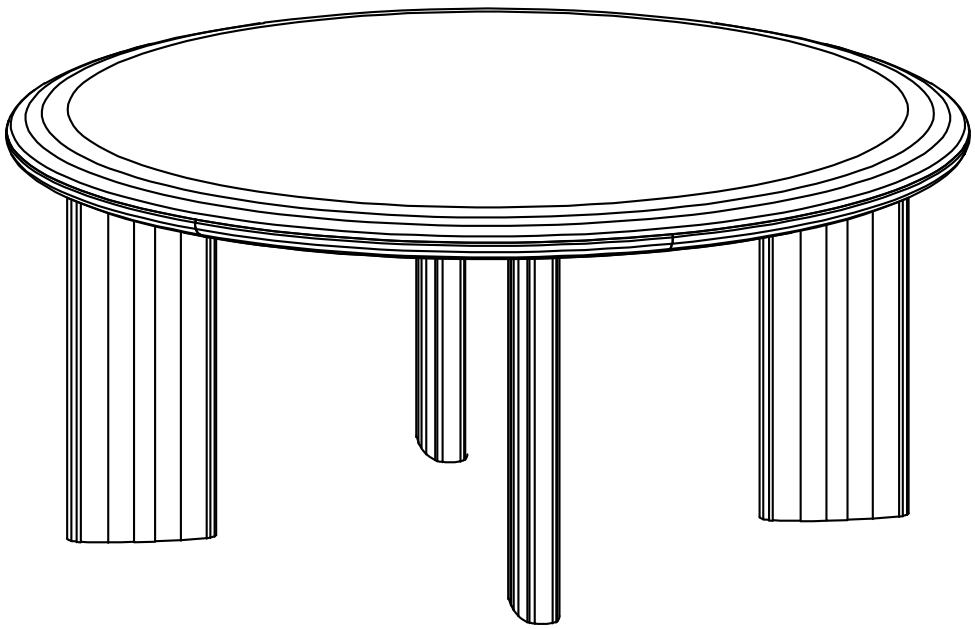

Assembly Instructions & Care Guide

CASTLERY

Hello there.

We're so glad that our Castlery product has found a home with you. As proud makers of modern, quality furniture, we’re confident that you will love and enjoy your purchase.

Setting it up is easy. Read on for a step-by-step guide to have your item assembled and ready for use.

Once you’re done, consider sharing a photo on social media or leaving us a review. We’d love to see how you've styled it in your space.

Thank you for being part of the Castlery community!

Contact us.

Should you have any questions or concerns regarding your purchase,you can contact-us via **www.castlery.com/contact-us.**

www.castlery.com

Before you start...

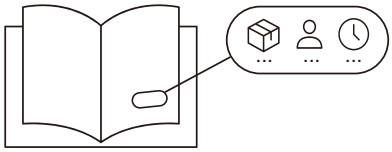

Check that you have received all cartons and familiarize yourself with the assembly requirements. This includes setting aside the allocated time required and having someone to assist you, if needed.

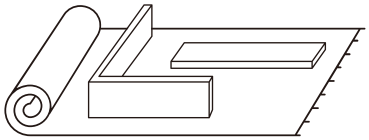

Ensure enough space for assembly. We recommend protecting your floor with a mat or cardboard to avoid scratches during the assembly process.

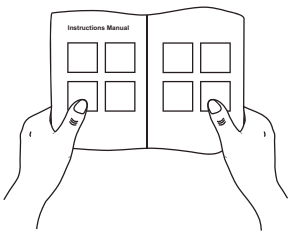

Read instructions carefully, and check that no parts are missing.

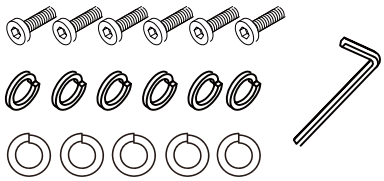

Lay out all hardware on a soft surface so you can easily identify them.

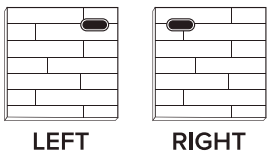

Carefully identify all components to differentiate which pieces are left and right.

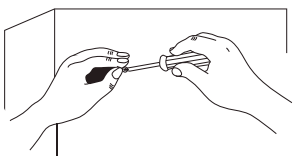

Carefully install your new product following the instructions stated. Don't skip ahead!

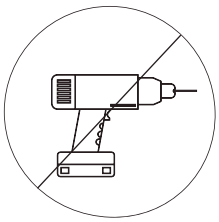

DO NOT over-tighten screws or use a drill. This will damage the product.

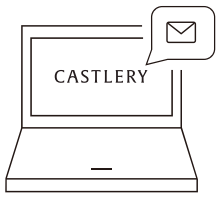

If you need further assistance, please contact us via **www.castlery.com/contact-us.**

Overview

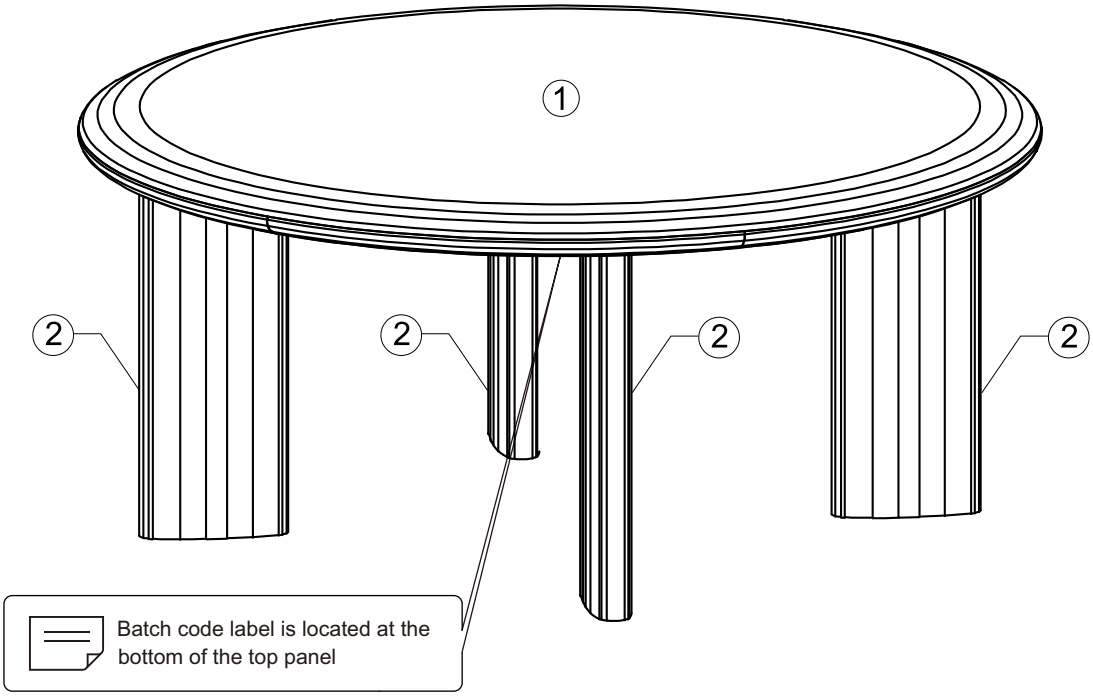

Parts

BOX 1 OF 1

☐ 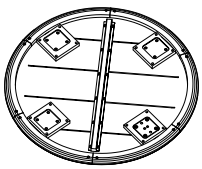

1 Table top

x1

☐ 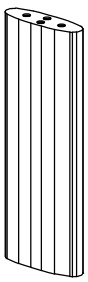

2 Leg

x4

Hardware

BOX 1 OF 1				BOX 2 OF 1			
☐	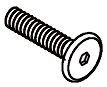	Ⓐ	Bolt M6x25mm x32	☐	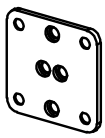	Ⓔ	Metal x4
☐		Ⓑ	Spring Washer M6x12mm x16				
☐		Ⓒ	Flat Washer M6x13 x16				
☐	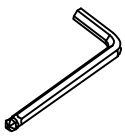	Ⓓ	Ball End Allen Key x1				

IMPORTANT: 2 persons needed for assembly.
This will help to minimize potential damage to the product or injury to persons during assembly.

There are inner box(es) that include components required to complete this assembly.

Please do not completely tighten all the hardware, until each assembly step is complete.

Before discarding the packaging, please use the checklist to ensure that you have all the parts required to assemble your product. Please kindly note if applicable please keep the original package when you want to return the product later.

If parts are missing or damaged, we will gladly ship your replacements parts free of charge. Please contact us via **www.castlery.com/contact-us**. Illustrations in this guide are for reference only and may be slightly different from the actual object.

x1 **x2** **15 mins**

Step 1

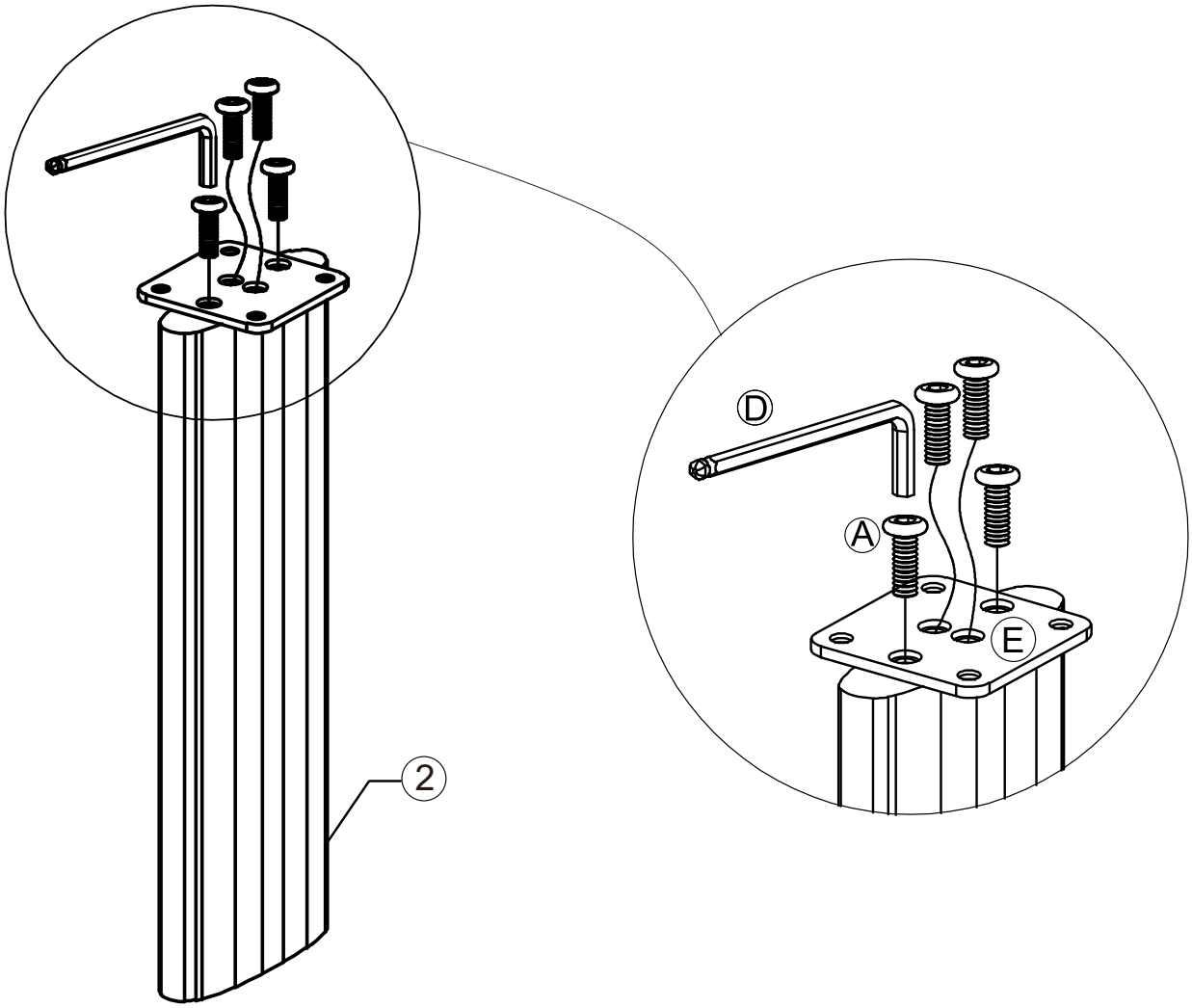

Step 2

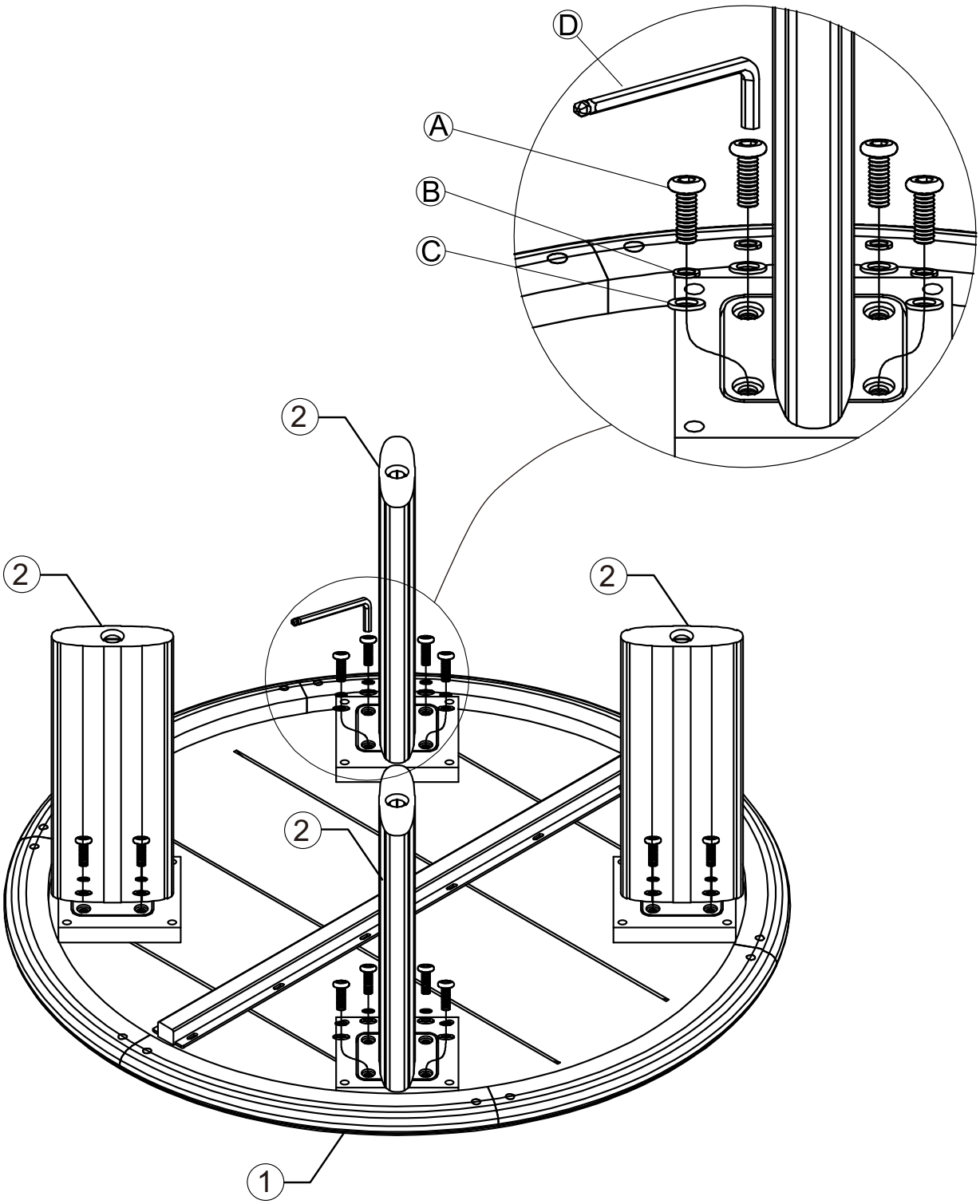

Step 3

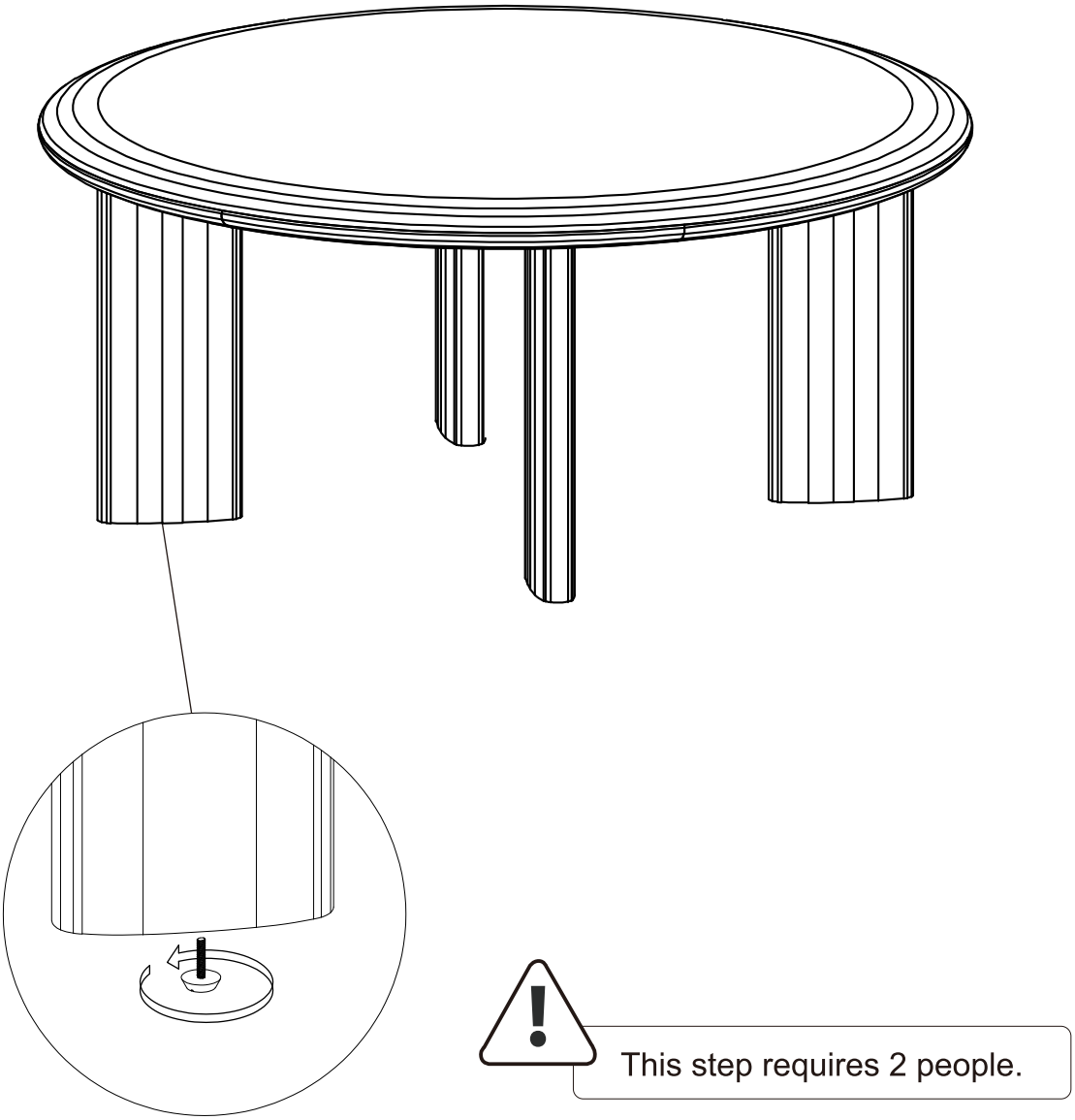

In the event of imbalance,
adjust the leveler on each leg accordingly

Finished!

Congratulations, we're almost there!
Please perform the following checks:

1. Have you tightened all the screws?

2. Are levelers in line with and touching the ground?

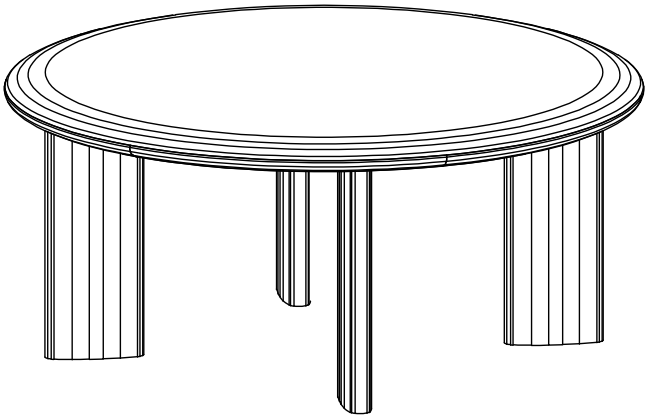

When moving to your preferred position, you need to lift the bottom of your product to move it .Levelers (if any) may slant if you drag your product.

Finally, clean the product with a soft dry cloth.

You're all set! Enjoy your new living space, thanks to the addition of your Castlery product.

Note: Your actual product may have minor size differences due to manual measurements.

Care Instructions

Your furniture, if treated with respect and love, will last you a long time. Each piece requires light maintenance to maximize its longevity.

Do's

- Position the dining table away from direct sunlight or use curtains or blinds to limit sun exposure.
- Clean the dining table regularly with a dry, soft cloth.
- Use placemats or coasters underneath hot / cold objects to prevent wood discoloration.
- Screws and bolts may loosen over time. Please inspect and tighten when necessary.
- You may place felt pads or a rug underneath the table to prevent scratches on the floor.

Dont's

- Do not use towels to clean the product as towel fibres may be entrapped.
- Do not use abrasive cleaners that may damage the finishes.
- Do not use a wet cloth to clean the product as this may trigger mold.
- Do not use a wet cloth to clean the product, only a damp cloth to avoid damage to the finish.

Natural Characteristics:

- Tiny fissures or cracks may develop if there are changes in humidity and temperature. This is unavoidable and occurs naturally in solid wood furniture.
- Natural wood knots, imperfections as well as wood grain and colour variations are to be expected for this collection.

Follow the care instructions and look after your furniture. In return, your furniture will look after you. For more information on our care instructions, visit our product website at www.castlery.com.

We hope to see you soon!