SLOANE DESK WITH 2 DRAWERS

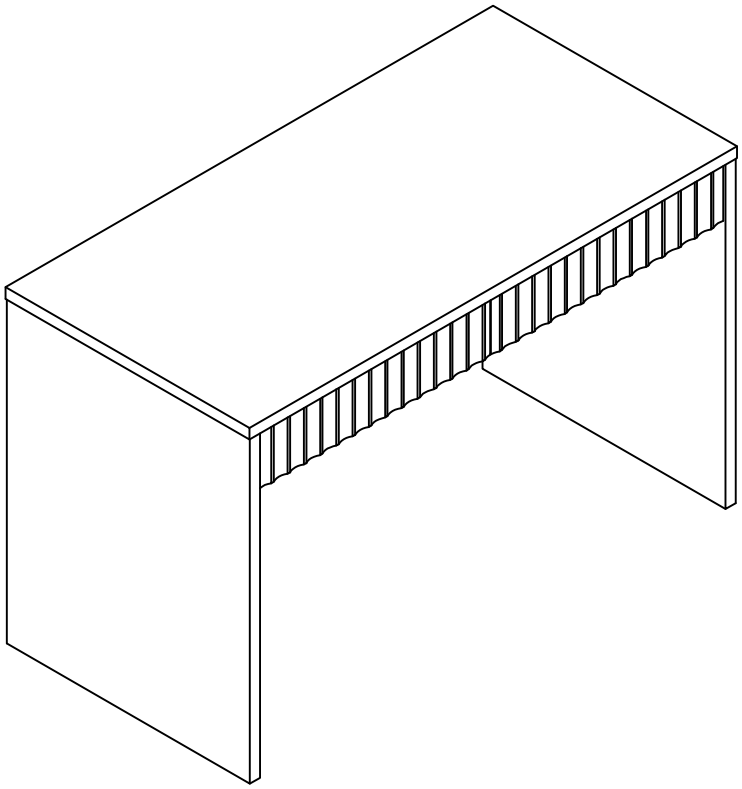

Assembly Instructions & Care Guide

CASTLERY

Hello there.

We're so glad that our Castlery product has found a home with you. As proud makers of modern, quality furniture, we're confident that you will love and enjoy your purchase.

Setting it up is easy. Read on for a step-by-step guide to have your item assembled and ready for use.

Once you're done, consider sharing a photo on social media or leaving us a review. We'd love to see how you've styled it in your space.

Thank you for being part of the Castlery community!

Contact us.

Should you have any questions or concerns regarding your purchase, you can contact us via **www.castlery.com/contact-us.**

Before you start...

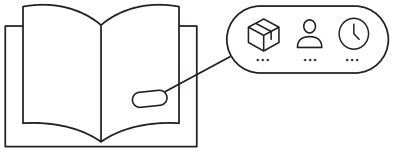

Check that you have received all cartons and familiarize yourself with the assembly requirements. This includes setting aside the allocated time required and having someone to assist you, if needed.

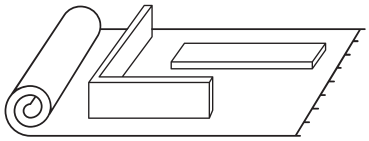

Ensure enough space for assembly. We recommend protecting your floor with a mat or cardboard to avoid scratches during the assembly process.

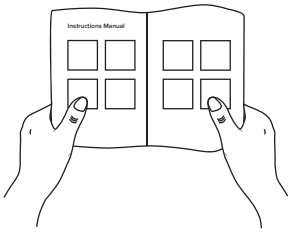

Read instructions carefully, and check that no parts are missing.

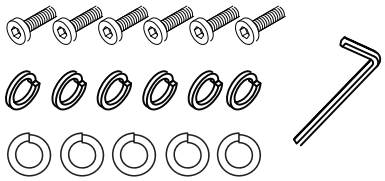

Lay out all hardware on a soft surface so you can easily identify them.

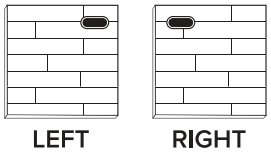

Carefully identify all components to differentiate which pieces are left and right.

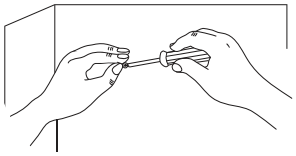

Carefully install your new product following the instructions stated. Don't skip ahead!

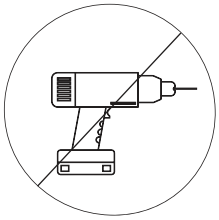

DO NOT over-tighten screws or use a drill. Only professional assemblers should use a drill.

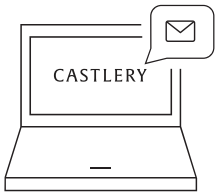

If you need further assistance, please contact us via **www.castlery.com/contact-us**.

Overview

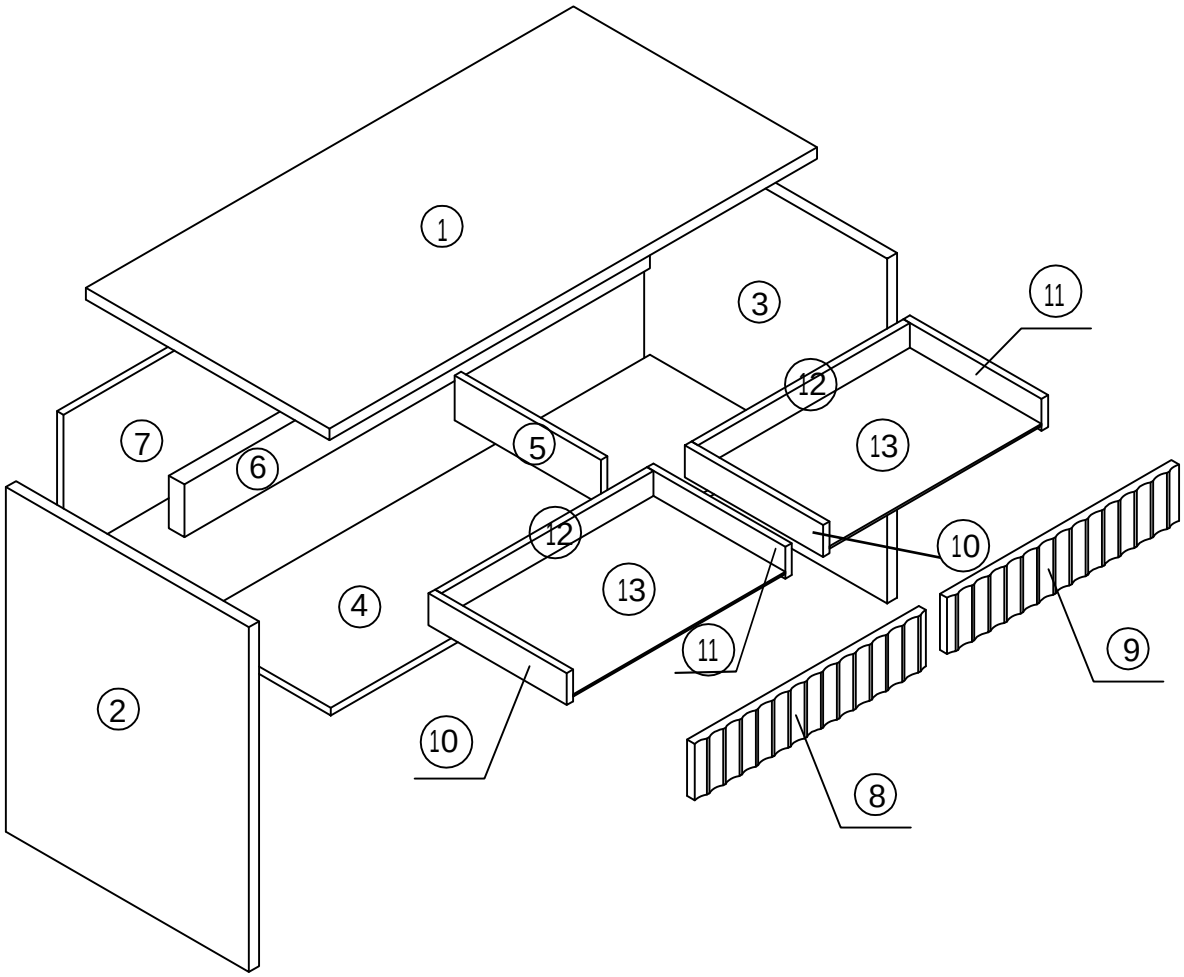

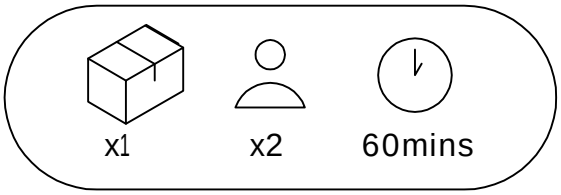

IMPORTANT: 2 persons needed for assembly.
This will help to minimize potential damage to the product or injury to persons during assembly.

There are inner box(es) that include components required to complete this assembly.

Please do not completely tighten all the hardware, until each assembly step is complete.

Before discarding the packaging, please use the checklist to ensure that you have all the parts required to assemble your product. Please kindly note if applicable please keep the original package when you want to return the product later.

If parts are missing or damaged, we will gladly ship your replacements parts free of charge. Please contact us via **www.castlery.com/contact-us.** Illustrations in this guide are for reference only and may be slightly different from the actual object.

Parts

BOX 1 OF 1

☐ 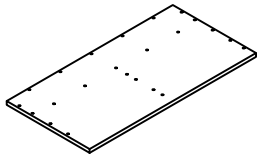 ① Top Panel **x1**

☐ 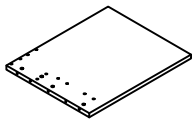 ② Left Side Panel **x1**

☐ 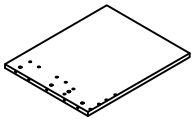 ③ Right Side Panel **x1**

☐ 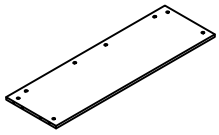 ④ Shelf **x1**

☐ 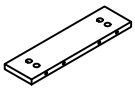 ⑤ Middle Support Panel **x1**

☐ 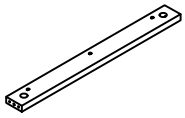 ⑥ Connect Panel **x1**

☐ 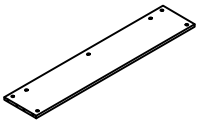 ⑦ Back Panel **x1**

☐ 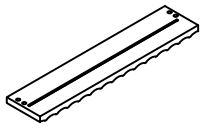 ⑧ Left Side Drawer Front **x1**

☐ 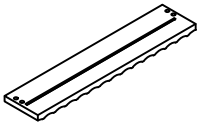 ⑨ Right Side Drawer Front **x1**

☐ 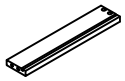 ⑩ Left Side Panel Of Drawer **x2**

☐ 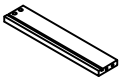 ⑪ Right Side Panel Of Drawer **x2**

☐ 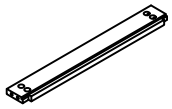 ⑫ Back Side Panel Of Drawer **x2**

☐ 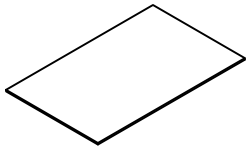 ⑬ Bottom Panel Of Drawer **x2**

Hardware

BOX 1 OF 1

☐ 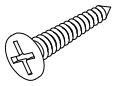 Ⓐ Screw 3.5*15
x12

☐ 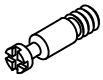 Ⓑ Camlbolt $\phi\frac{1}{4}$"
x44

☐ Ⓒ Camlock $\phi\frac{9}{16}$"
x44

☐ Ⓓ Dowel ϕ 8*30
x28

☐ 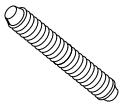 Ⓔ Threaded Rod M8*95
x2

☐ Ⓕ Nut M8
x2

☐ Ⓖ Halfmoon Nuts Spacer
x2

☐ Ⓗ Open End Wrench 14mm
x1

☐ 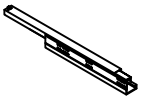 Ⓘ Drawer Runner (Left) 14"
x2

☐ 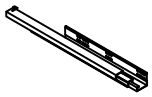 Ⓙ Drawer Runner (Right) 14"
x2

Step 1

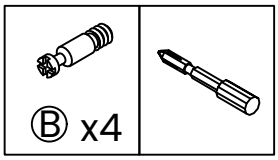

Cross-head
screwdriver
(not provided)

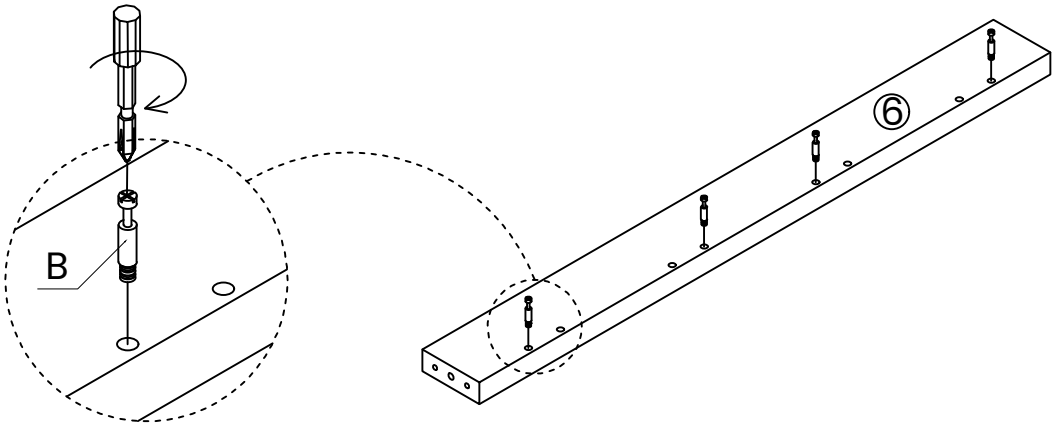

Step 2

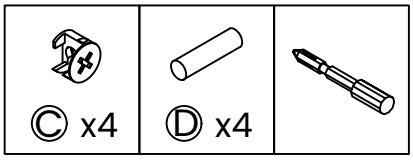

Cross-head
screwdriver
(not provided)

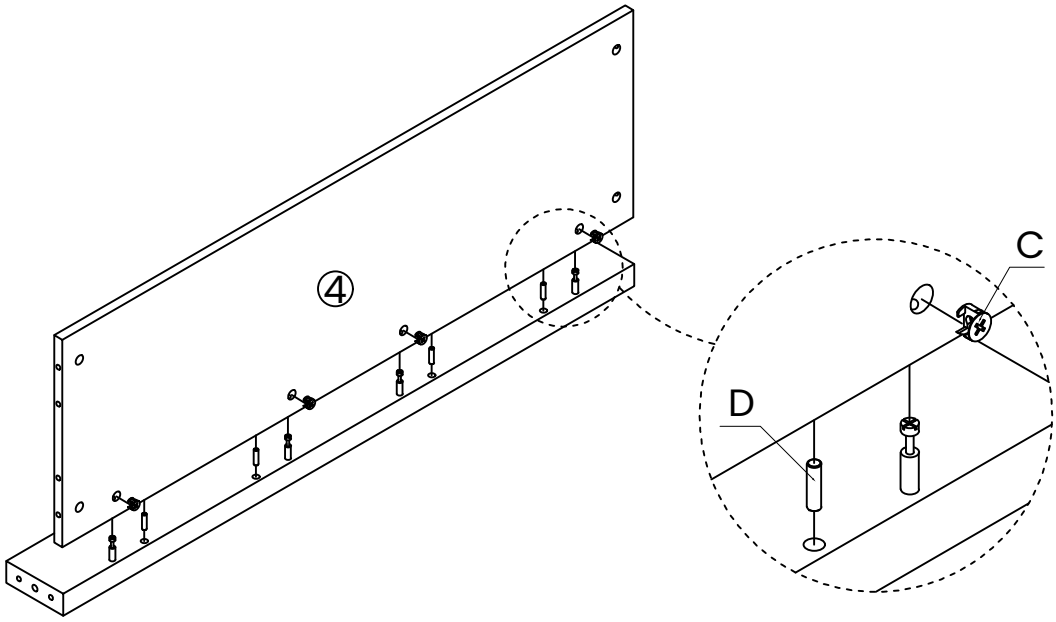

Step 3

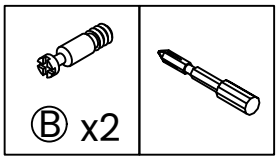

Cross-head
screwdriver
(not provided)

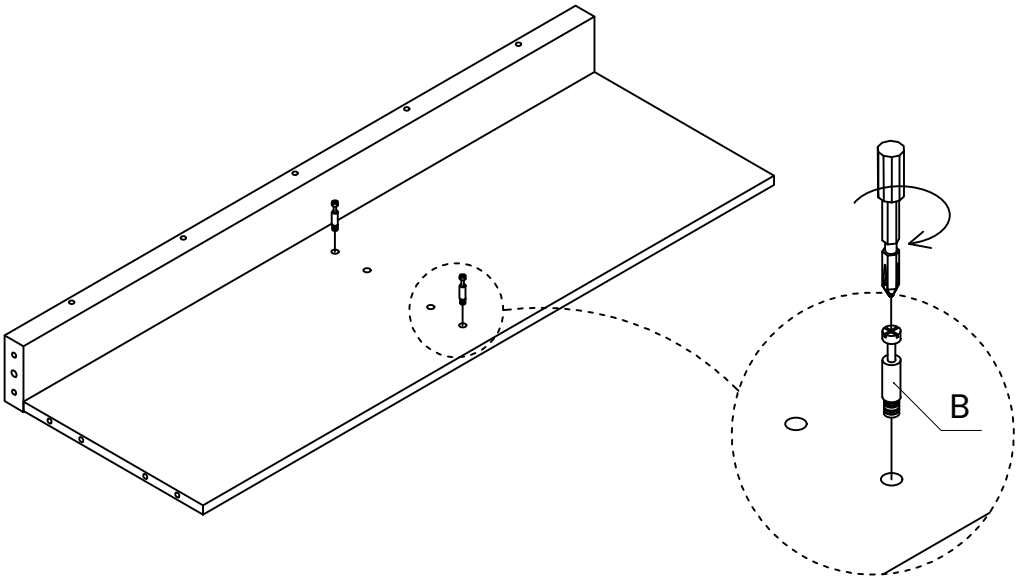

Step 4

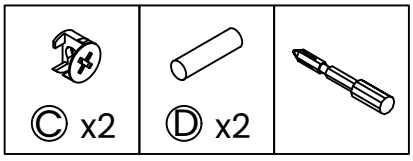

Cross-head
screwdriver
(not provided)

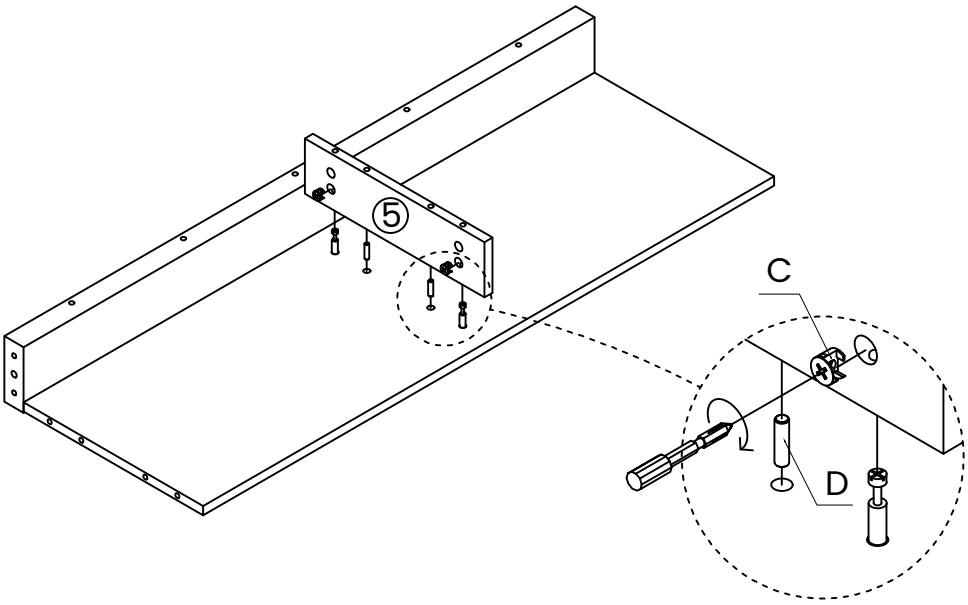

Step 5

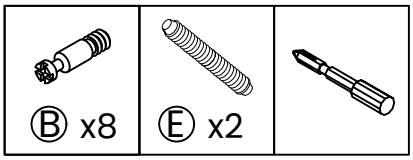

Cross-head
screwdriver
(not provided)

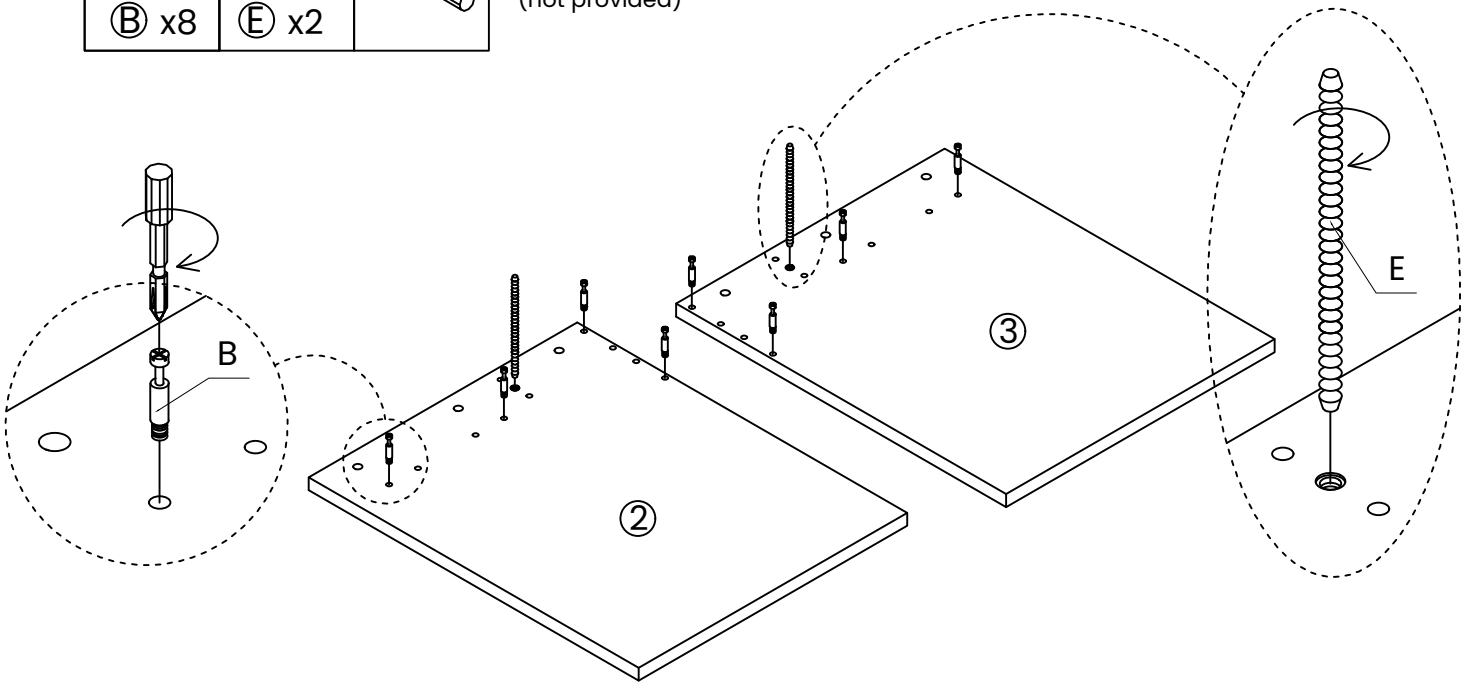

Step 6

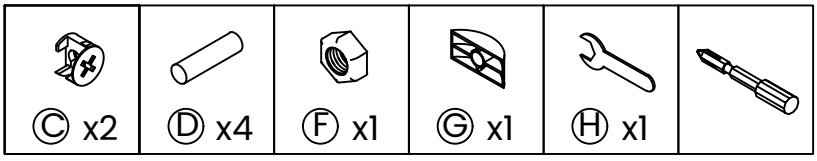

Cross-head
screwdriver
(not provided)

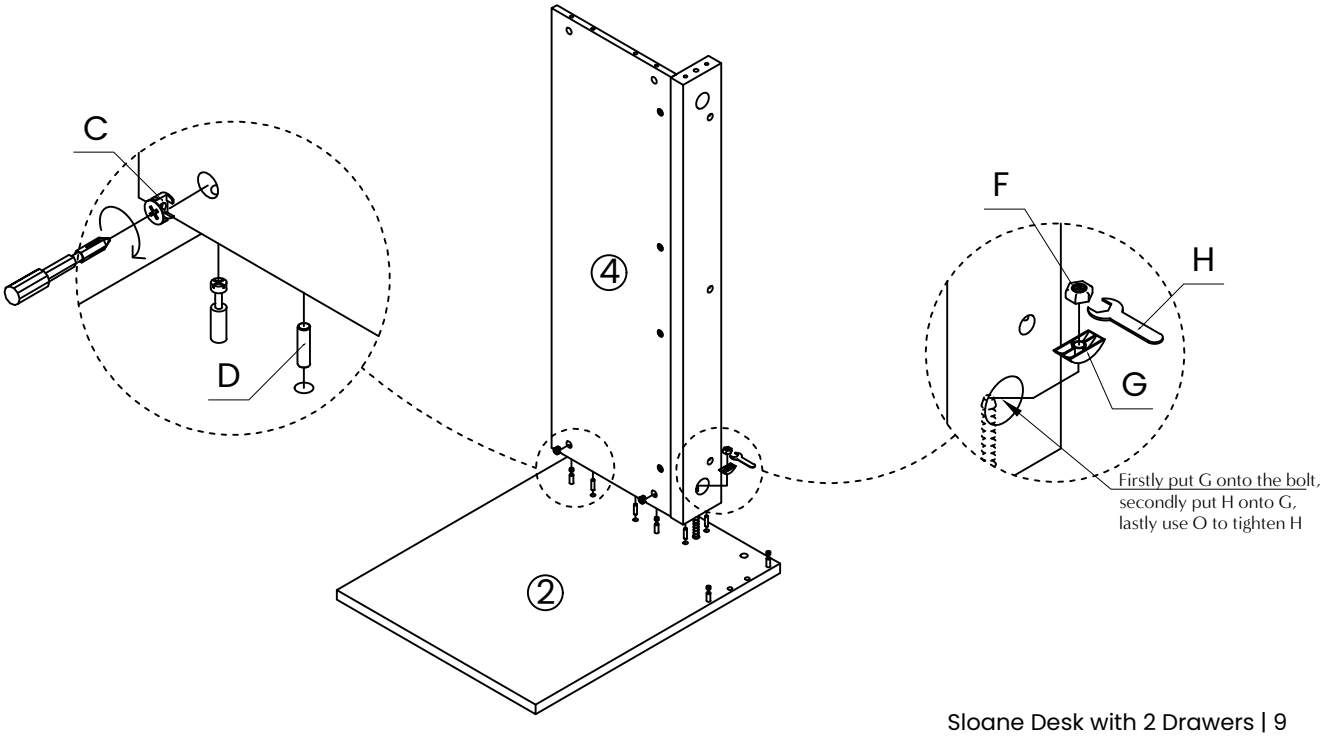

Step 7

Ⓒ x2	Ⓓ x2	

Cross-head screwdriver (not provided)

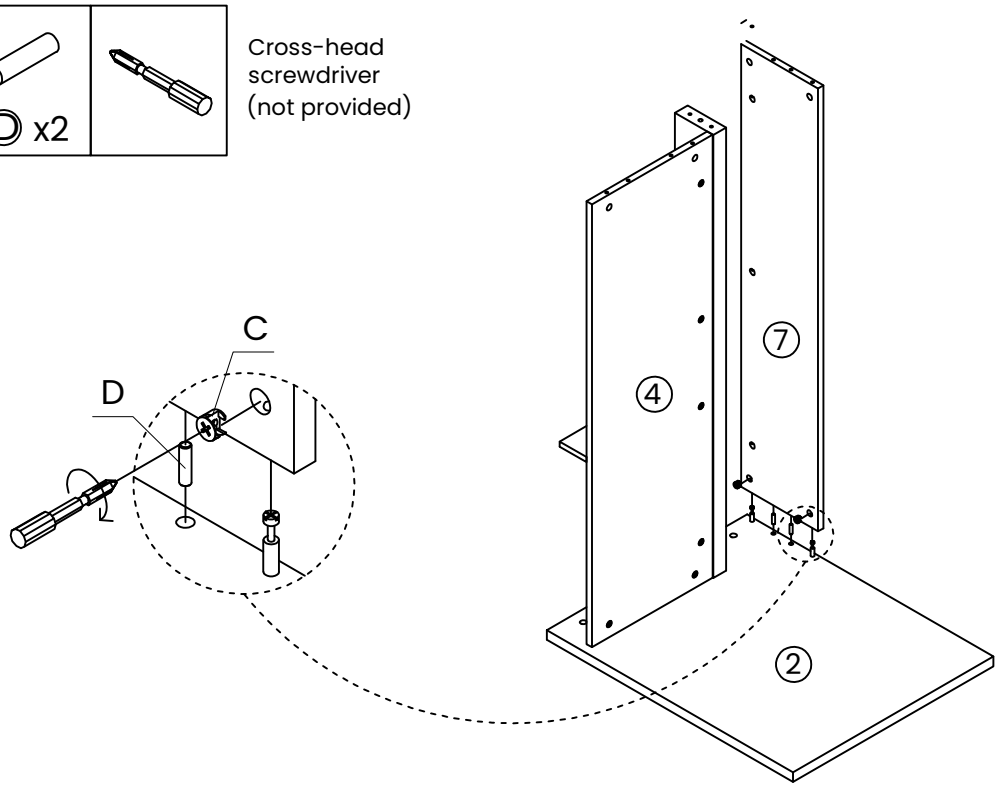

Step 8

Ⓒ x4	Ⓓ x6	

Cross-head screwdriver (not provided)

This step require 2 people

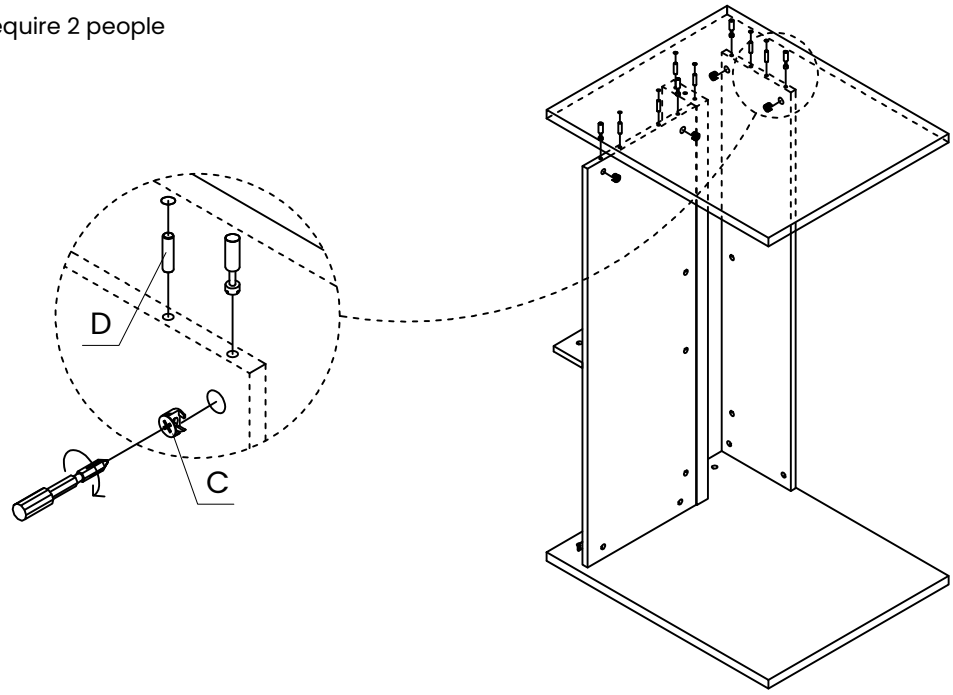

Step 9

Ⓓ x10	Ⓕ x1	Ⓖ x1	Ⓗ x1

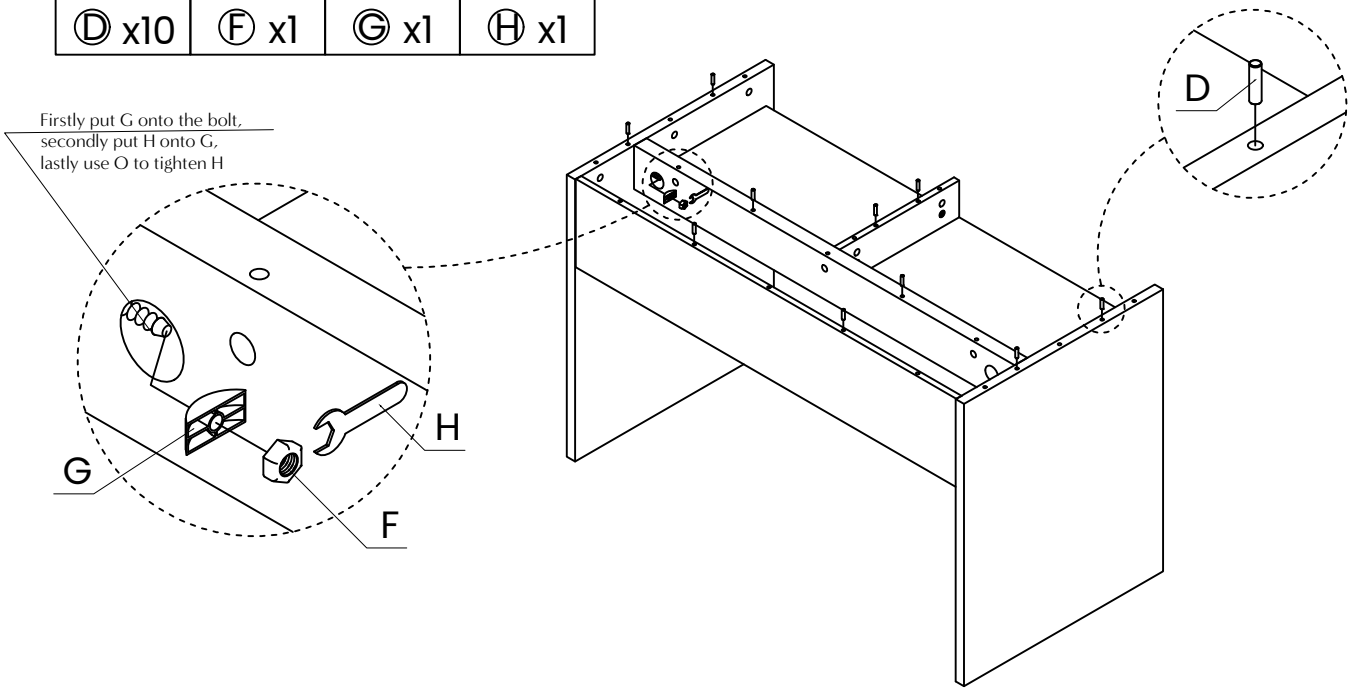

Step 10

Ⓐ x12	Ⓘ x2	Ⓙ x2	

Cross-head screwdriver (not provided)

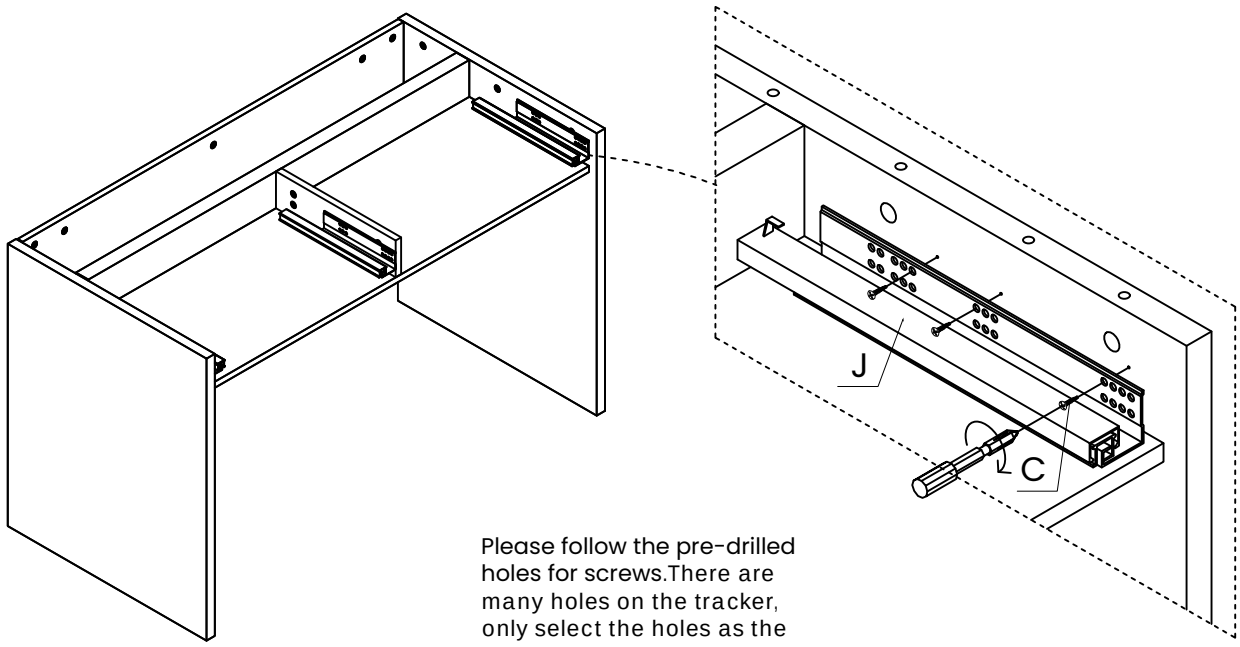

Please follow the pre-drilled holes for screws.There are many holes on the tracker, only select the holes as the shown to install.

Step 11

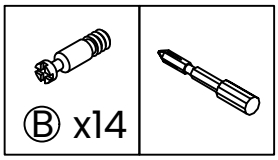

Cross-head
screwdriver
(not provided)

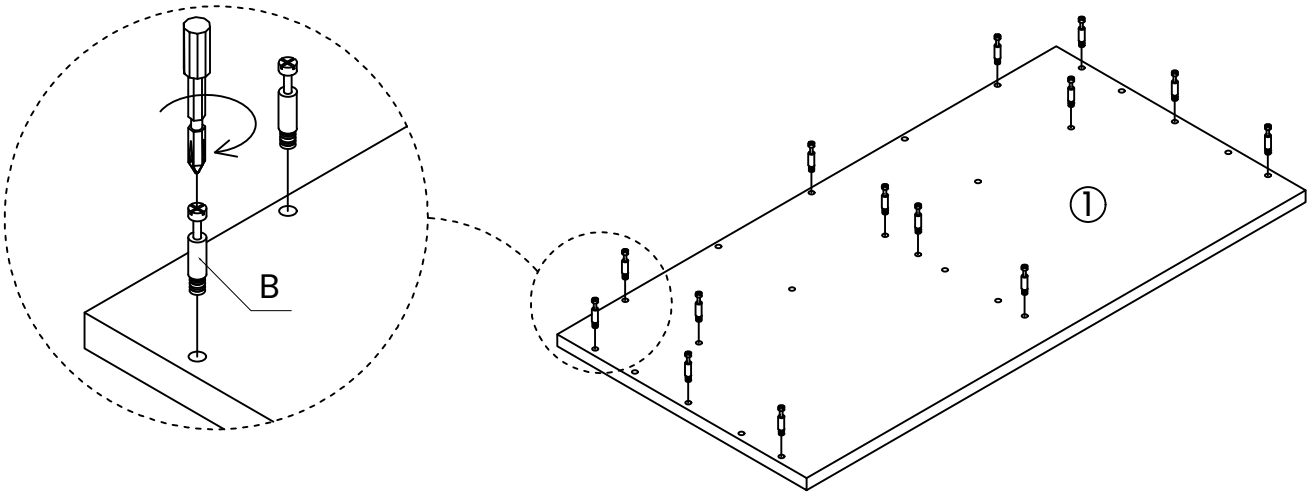

Step 12

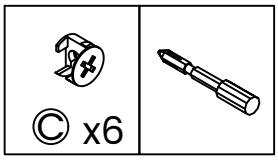

Cross-head
screwdriver
(not provided)

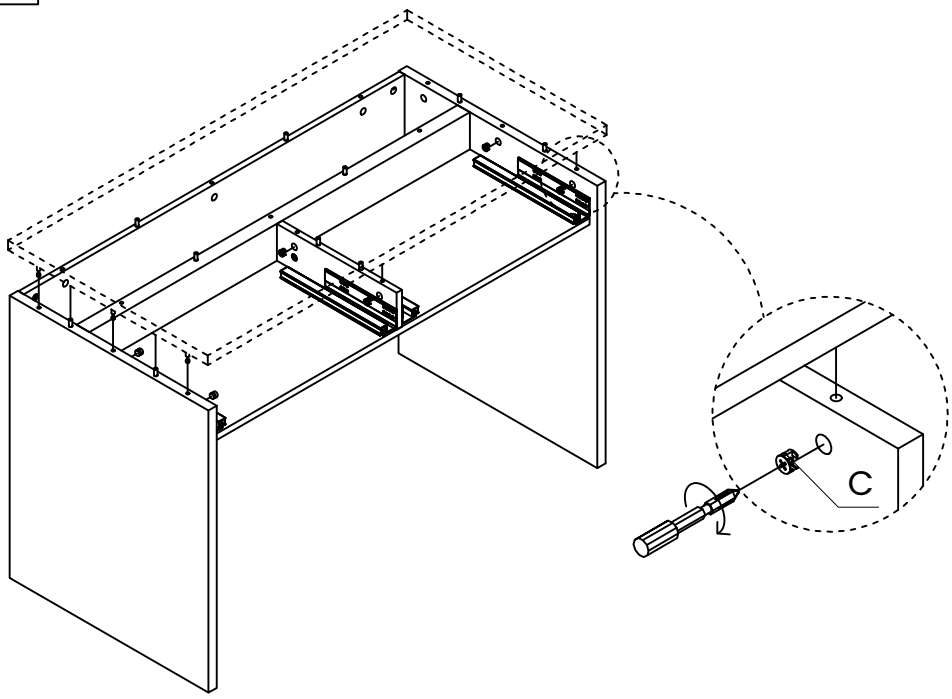

Step 13

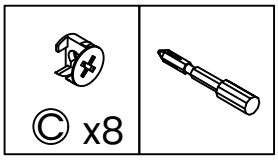

Cross-head
screwdriver
(not provided)

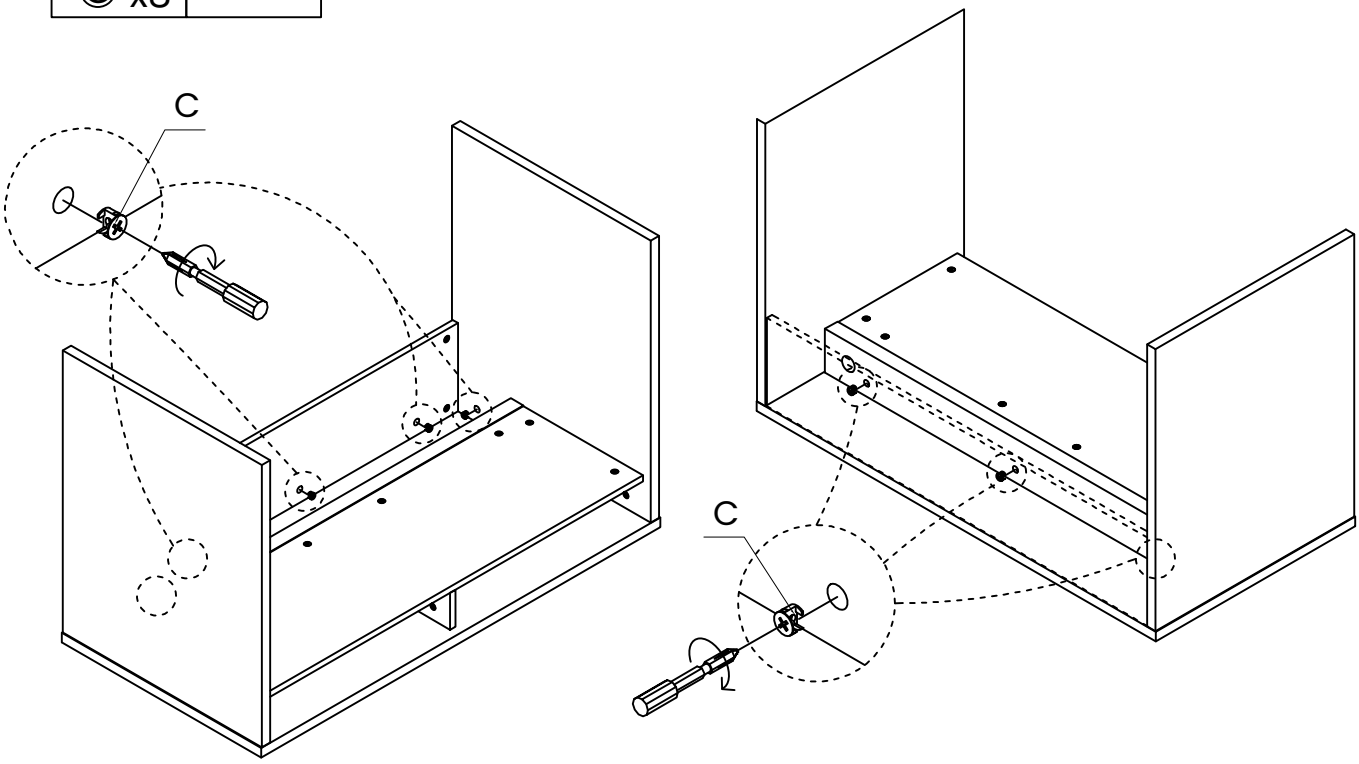

Step 14

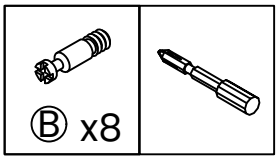

Cross-head
screwdriver
(not provided)

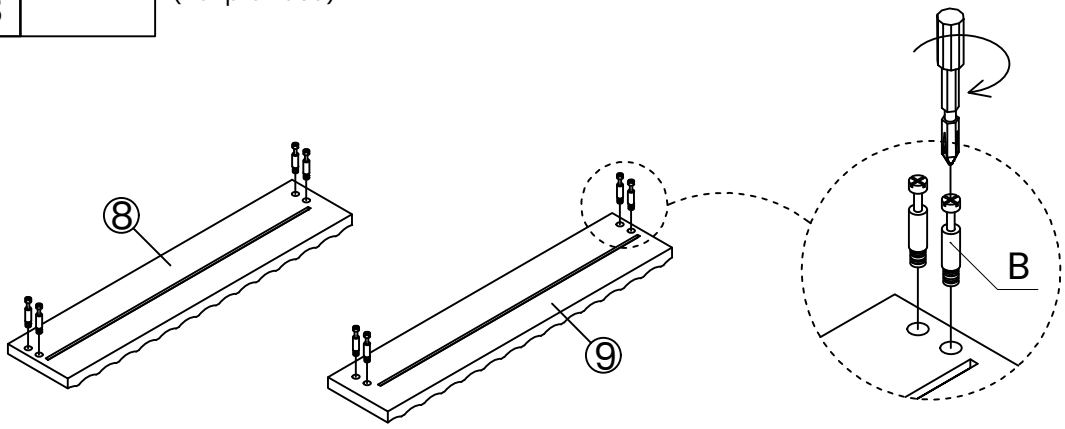

Step 15

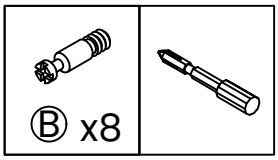

Cross-head
screwdriver
(not provided)

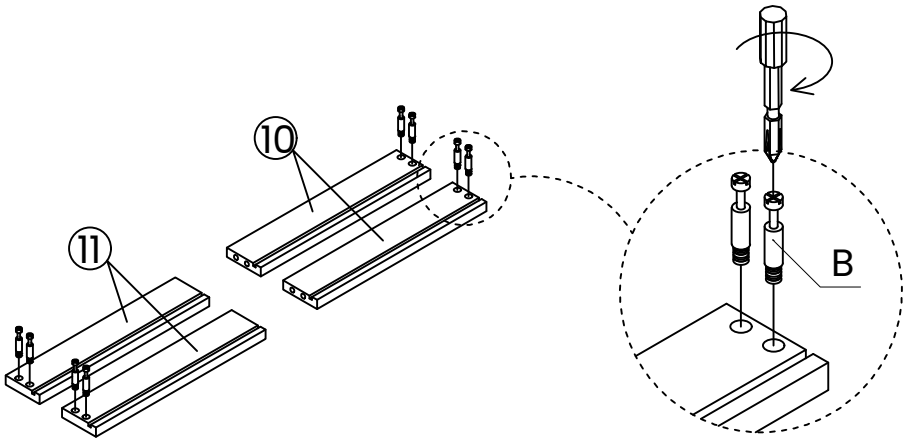

Step 16

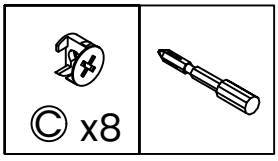

Cross-head
screwdriver
(not provided)

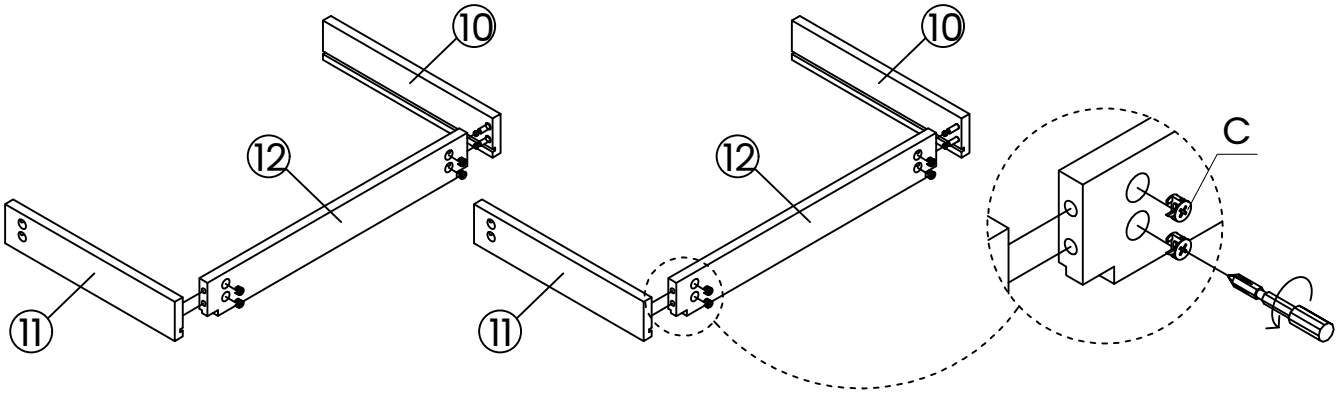

Step 17

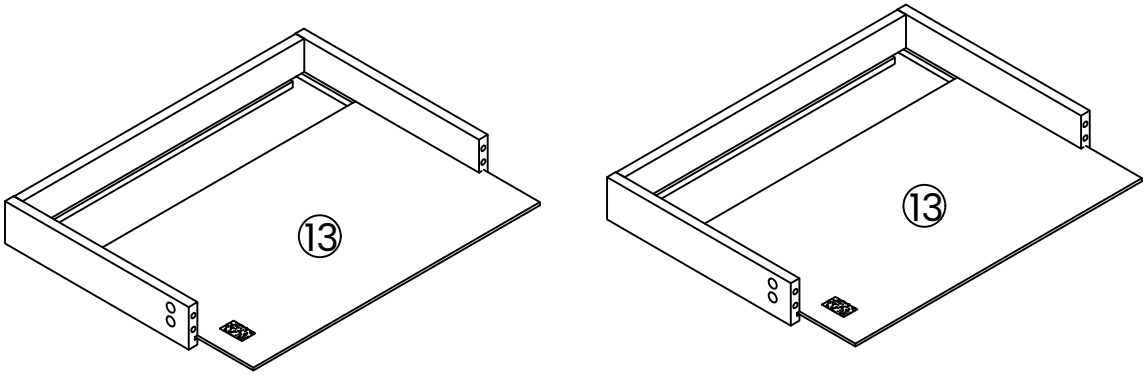

Step 18

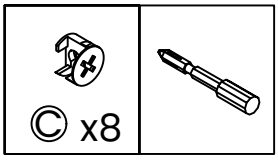

Cross-head
screwdriver
(not provided)

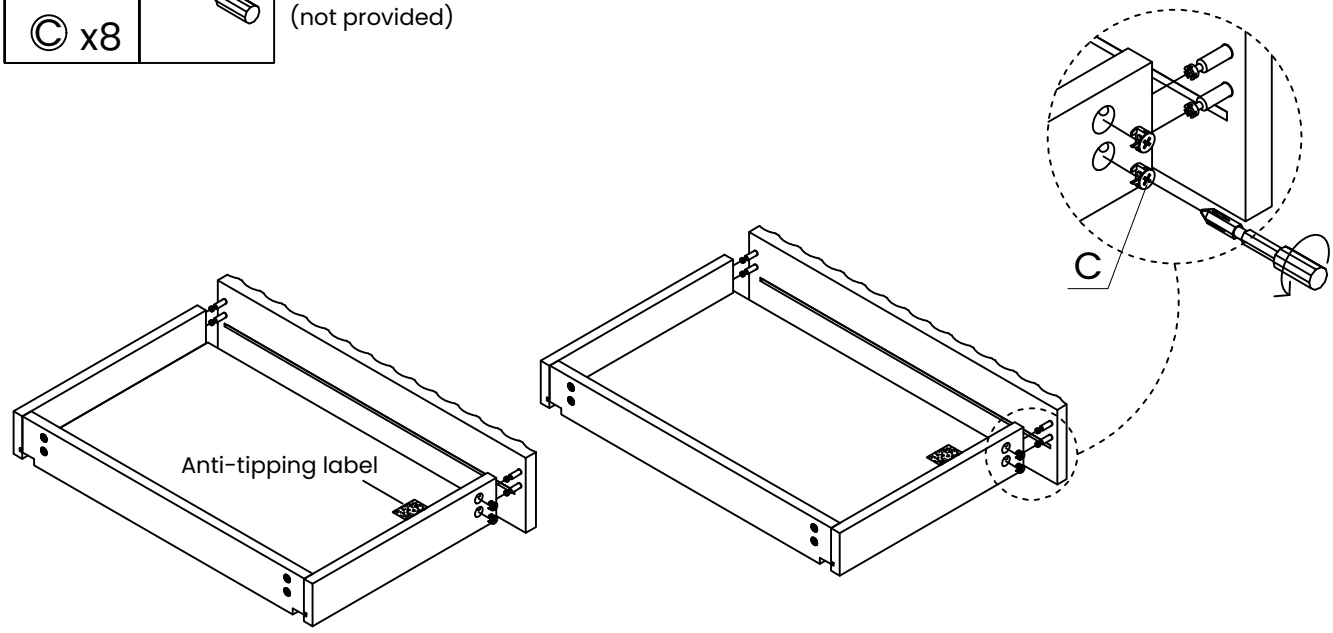

Step 19

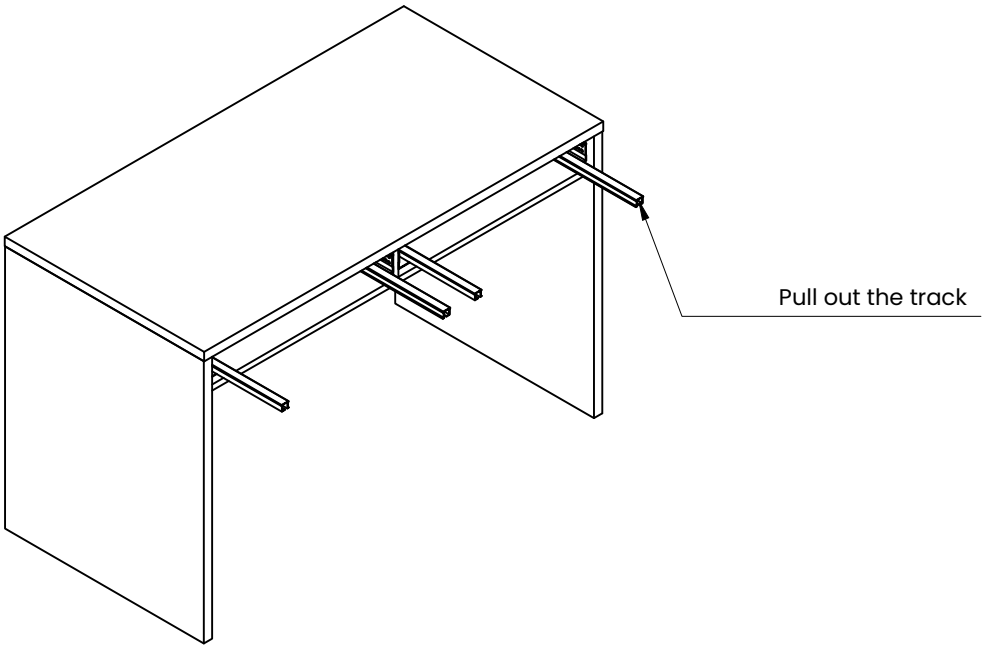

Step 20

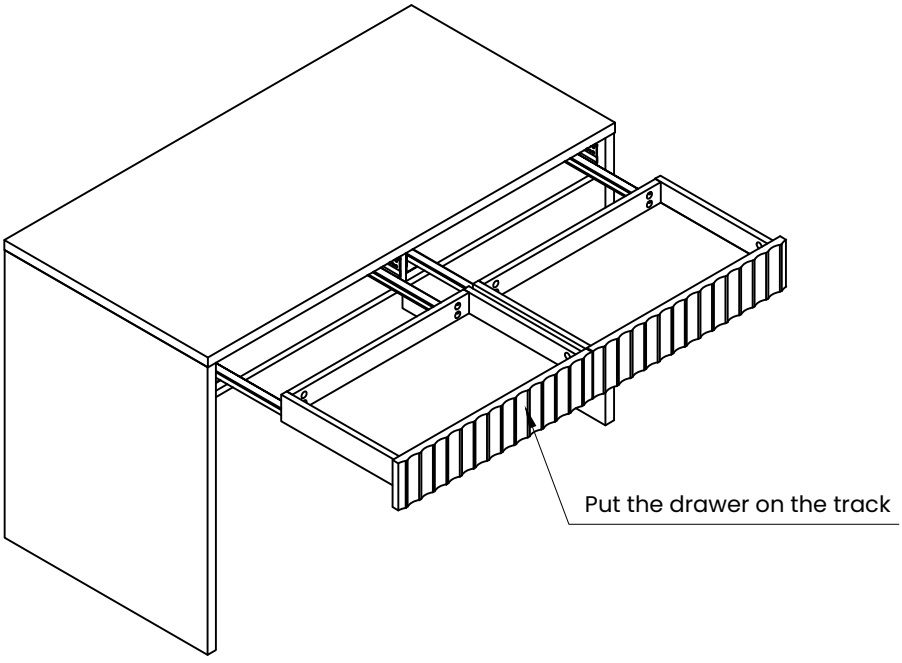

Step 21

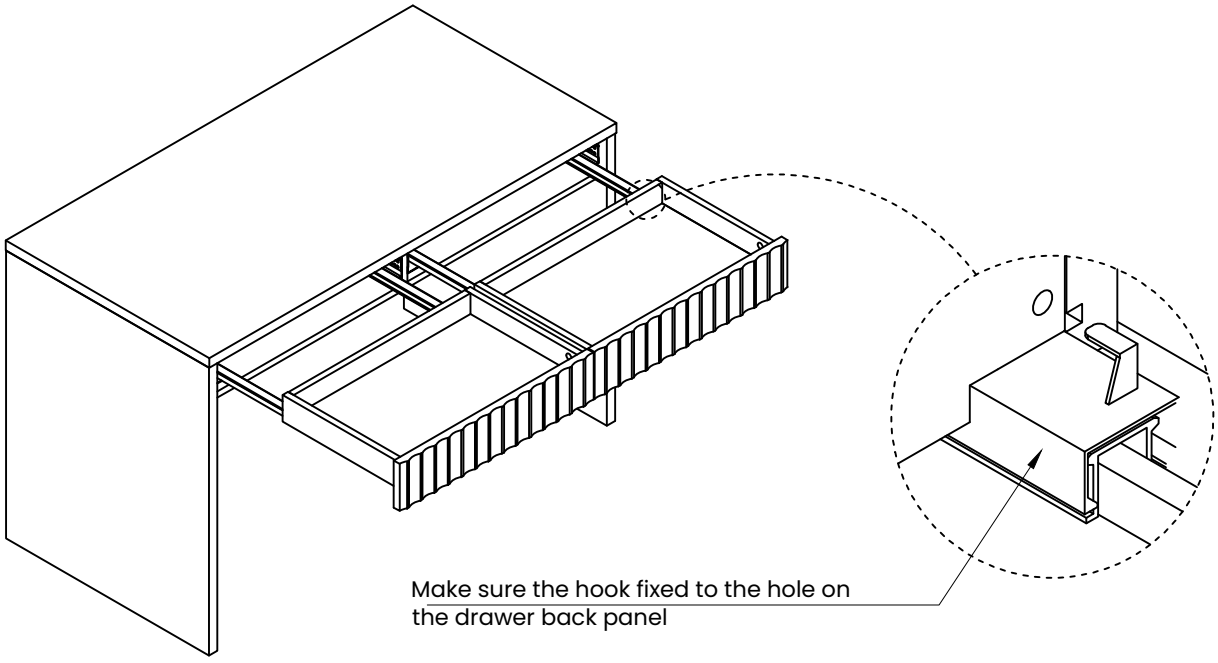

Step 22

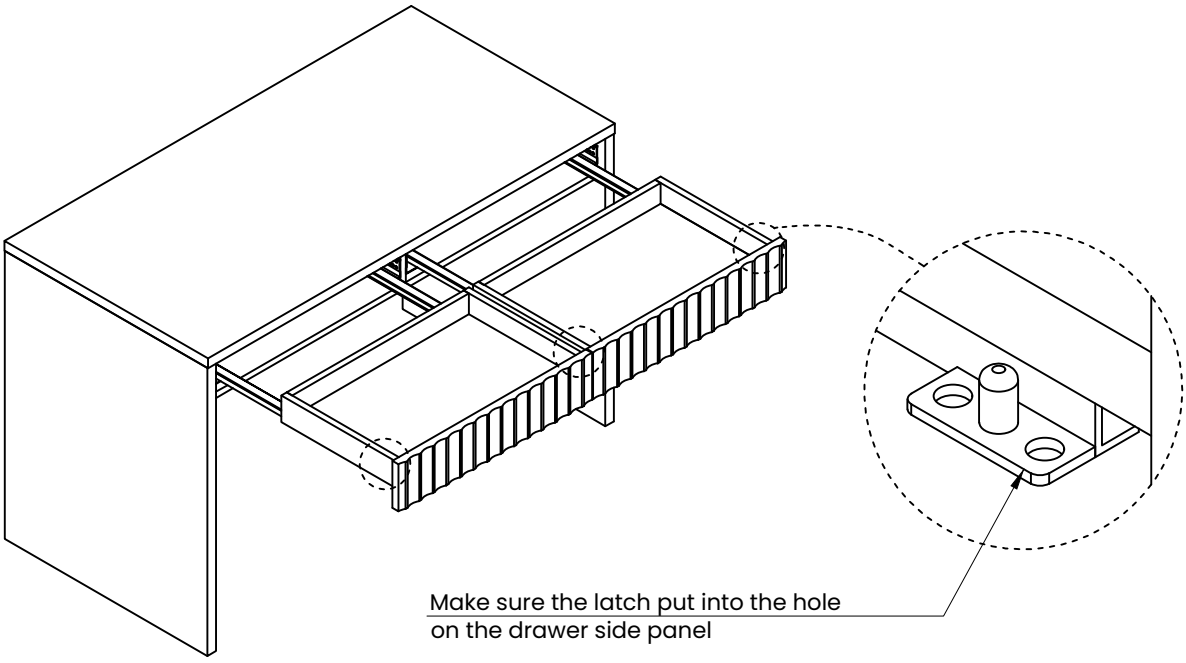

Step 23

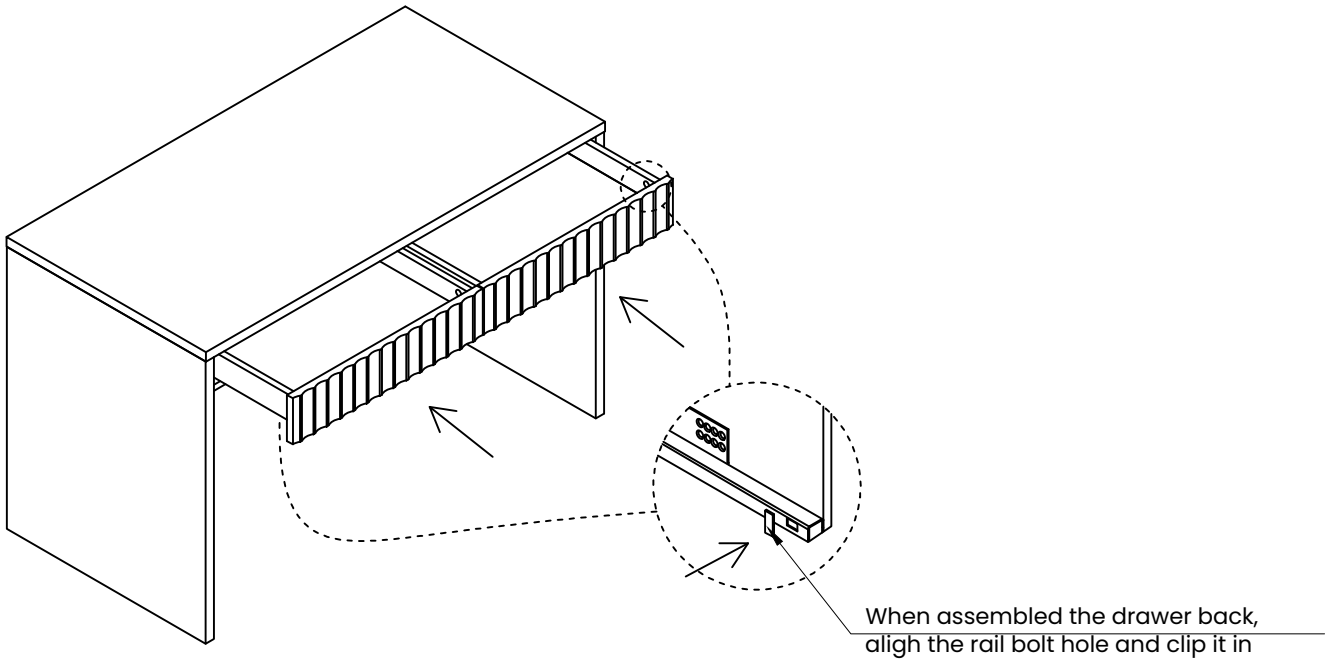

Step 24

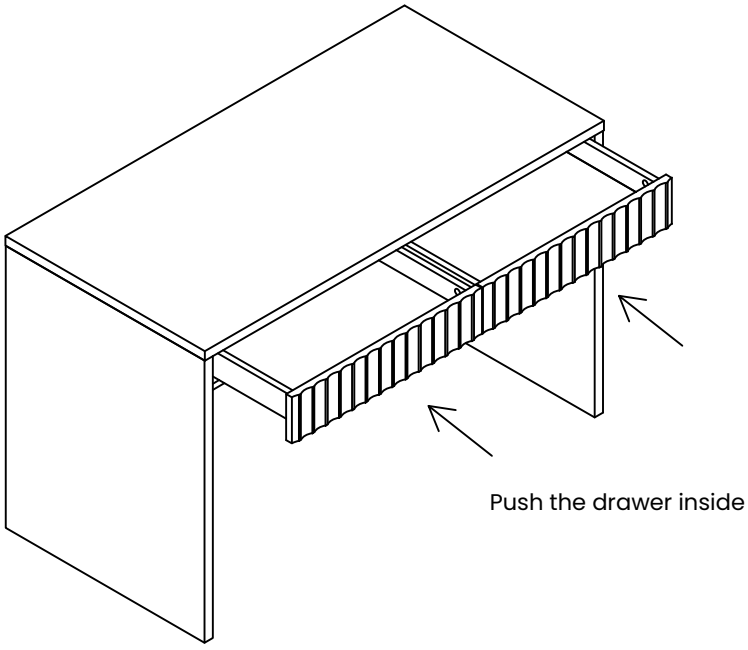

Finished!

Congratulations, we're almost there!
Please perform the following checks:

1. Have you tightened all the screws?
2. Do not missing bolts installation.

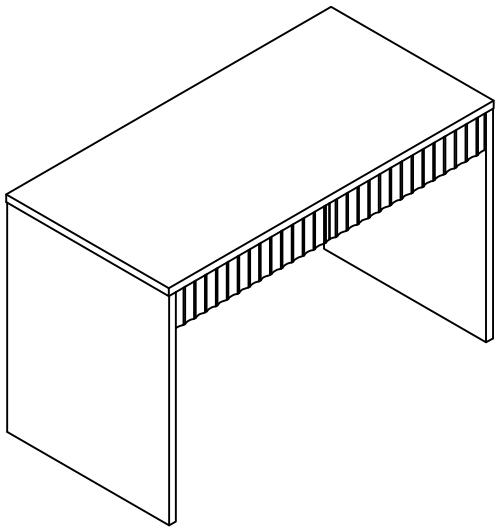

Always lift your Castlery product when moving it to your preferred location. Levelers (if any) may slant if you drag your product.

Finally, clean the product with a clean cloth.

You're all set! Enjoy your new living space, thanks to the addition of your Castlery product.

Note: Your actual product may have minor size differences due to manual measurements.

Care Instructions

Your furniture, if treated with respect and love, will last you a long time. Each piece requires light maintenance to maximize its longevity.

Wooden Table Care

- Dust with a soft, dry cloth and clean with a slightly damp cloth.
- Avoid abrasive cleaners & placing rough or sharp objects on the surface.
- Keep furniture away from direct heat or sunlight.
- Wipe spills immediately.
- Use coasters or placemats where possible, to prevent discoloration of the surface.
- Lift when moving, do not drag.
- Periodically check that all connections are tightly-secured.

Follow the care instructions and look after your furniture. In return, your furniture will look after you. For more information on our care instructions, visit our product website at www.castlery.com.

We hope to see you soon!