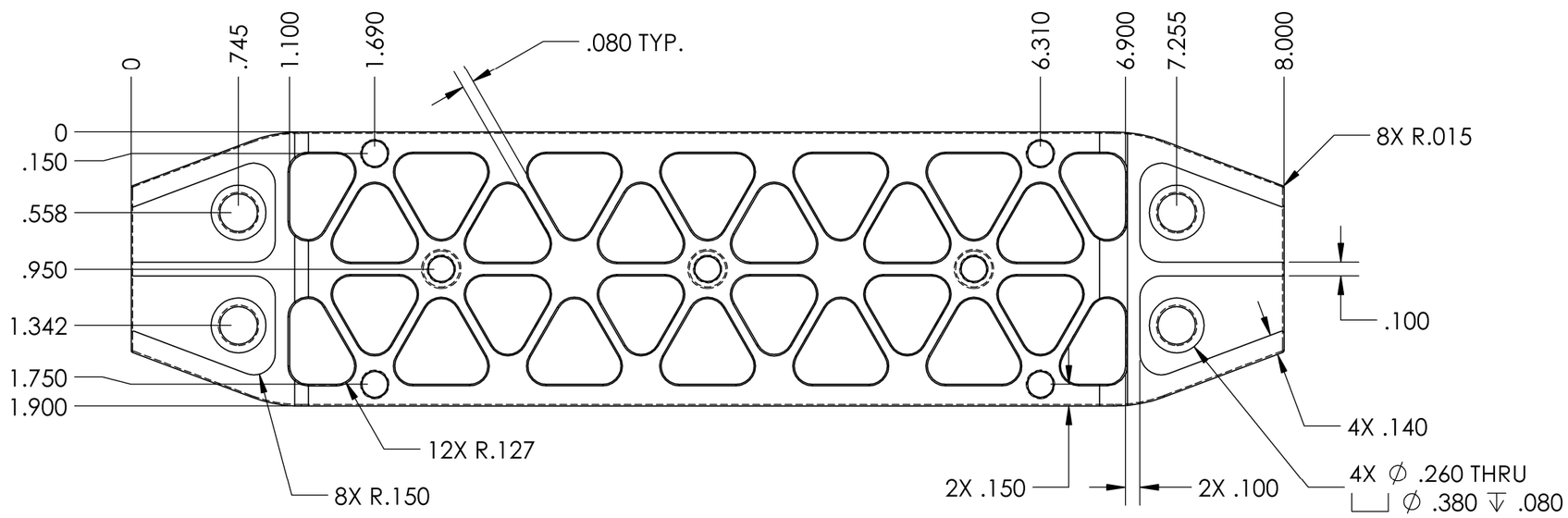

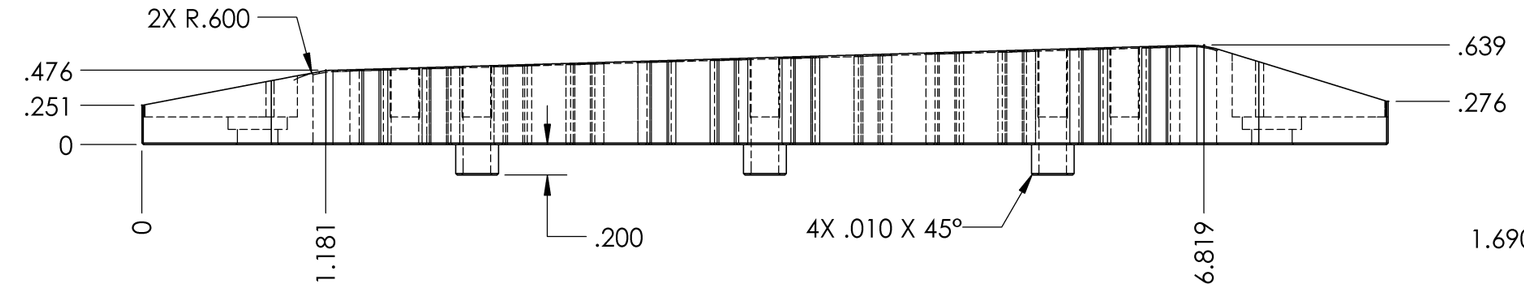

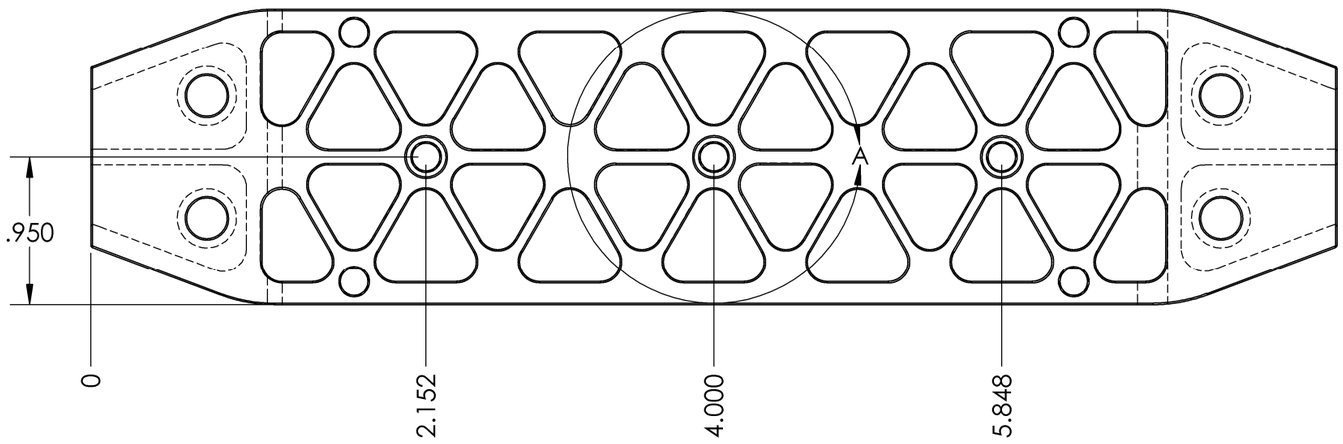

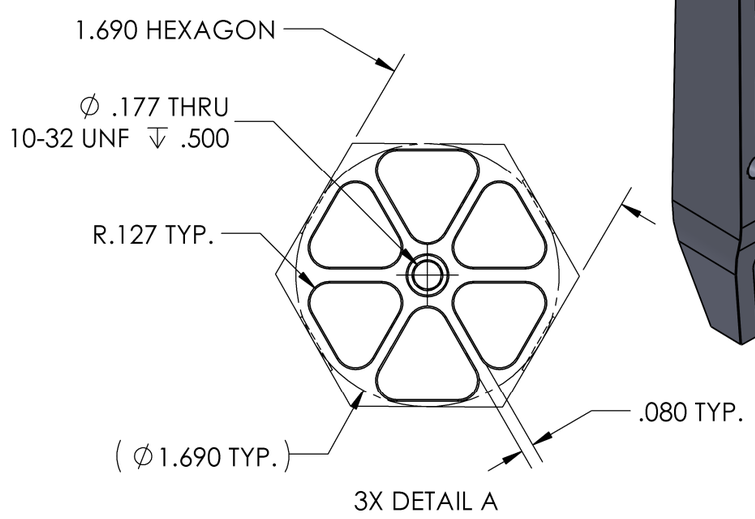

3X DETAIL A

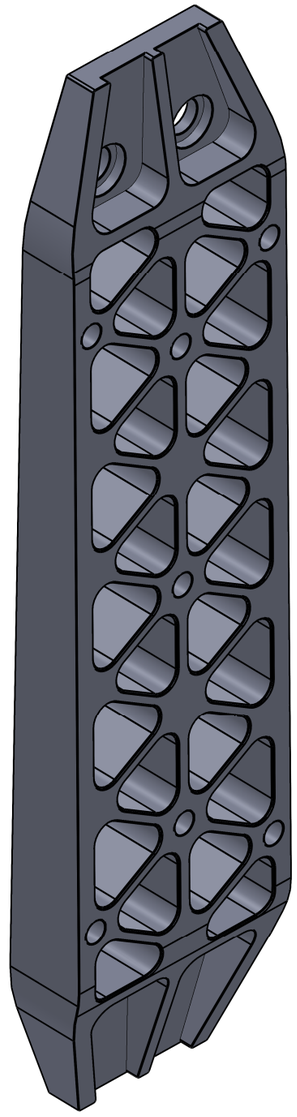

REV	DESCRIPTION	DATE	INITIALS
A	ORIGINAL DESIGN	11/5/22	NGM
B			
C			
D			
E			
F			
G			
H			

UNLESS OTHERWISE SPECIFIED DIMENSIONS ARE IN INCHES.
ALL DIMENSIONS APPLY AFTER ANY SURFACE TREATMENT (i.e. ANODIZE, PLATING)
DECIMAL
X.X ±0.1
X.XX ±0.01
X.XXX ±0.005
X.XXXX ±0.0005
ANGULAR ±0.5°
SURFACE FINISH 64

CAD GENERATED DRAWING
DO NOT MANUALLY UPDATE OR SCALE

SURFACE SHALL BE UNIFORM AND FREE OF BURRS, BLEMISHES, AND SCRATCHES.

MATERIAL: ALUMINUM 6061

PART FINISH: ANODIZE CLEAR

This document, including the information contained herein, is the property of MOSSCNC, and is considered contidential and proprietary information. It is delivered on the express condition that it not be used, disclosed, or reproduced in whole or in part, for any reason without prior written consent of MOSSCNC.

MOSSCNC
NICHOLAS G. MOSS
RAVENA, NY 12143

DESCRIPTION: STOCK 1" X 2" CUT TO 8.1"

SCALE:	SHEET:	DRAWING NUMBER:	REV:
1:1	1 OF 1	TITAN-10M	A

DRAWN BY NICHOLAS G. MOSS