American Standard®

WATER HEATERS

Residential & Commercial

Product Catalog
Complete Line

Effective
May
2017

www.americanstandardwaterheaters.com

American Standard®

WATER HEATERS

Is Proud to Introduce Our New Line of Tankless Condensing Water Heaters

INTERTEK ETL LISTED US

ENERGY STAR

Setting The New Standard

Tankless Condensing Water Heaters
Available in 180,000 & 199,000 BTU's
Natural & Propane Gas
(Conversion Kits Available)

View all our
Commercial & Residential
Water Heaters
www.AmericanStandardWaterHeaters.com

Or Call Toll Free: (800) 900-9063

TABLE OF CONTENTS

AMERICAN STANDARD WATER HEATERS PRODUCT CATALOG

Setting The New Standard

Residential Products

Table of Contents 3
Residential Introduction 4
Residential Heaters Features & Benefits 5
GN - Ultra Low NOX 6
RU 75-76-AS & RU 100-76-AS 7
GSN - Low NOx 8
G-75 T2 AS & G-100 T2 AS 9
EN-30 / 40 / 50 10
Point of Use 11
Tankless Condensing Water Heaters 12
Electric Heat Pump Water Heaters 13
NAECA Compliant 14

Commercial Products

Commercial Introduction 16
Commercial Heaters Features & Benefits 17
Standard Gas Light Duty 18
Standard Gas Heavy Duty 19
Ultra Low NOx Gas - Light Duty 21
Ultra Low NOx Gas - Heavy Duty 22
High Efficiency Gas 24
Commercial Storage Tanks 25
Commercial Light Duty Electric 26
Commercial Electric 27

American Standard®
WATER HEATERS

American Standard®

WATER HEATERS

Residential Water Heaters

PRODUCT LINE

American Standard Water Heaters *are the top of mind brand for homeowners due to their reliability. Large residential homes require diverse water heating solutions and American Standard Water Heaters always delivers. Our ongoing commitment to owners is to provide the best quality products, services & value in the industry. Our Residential products include Electric Tank, Gas Low NOx & Ultra Low NOx, Tankless Condensing, Electric Heat Pumps, Point-of-Use Water Heaters, replacement parts and accessories.*

Features & Benefits of Residential Water Heaters

Glass-Lined Tank
Inner tank glass-lined with Dura-Glas™ and fired at 1600°F for optimum protection against corrosion effects.

Brass Drain Valve
Factory installed brass drain valve. Durable to prevent unintentional breakage.

Temperature & Pressure Relief Valve
Factory provided ASME rated T & P valve. Top or side connections for installation flexibility.

Self-Cleaning Dip Tube
Turbulence inducing, polypropylene, cold water inlet-tube.

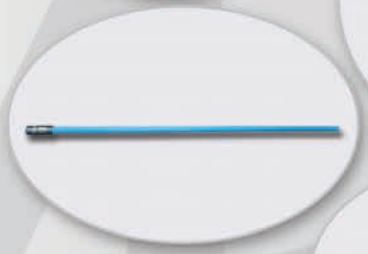

Aluminum / Magnesium Anode
To protect tank life against corrosion effects.
GSN models Aluminum Anode Rod.

Factory Installed Dielectric Hot & Cold Water Connection with Heat -Traps
3/4" NPT water connections to extend tank life and to easy installations. Reduces standby heat loss in water piping.

Extra Anode Rode Warranty Extension
Warranty extension from 6 to 12 years; tank only.

Automatic Gas Valve-Thermostat
Automatic thermostat with built-in gas pressure regulation; also incorporates energy cut-off system to prevent abnormal high water temperature for added safety.

American Standard®
WATER HEATERS

Setting The New Standard

GN - Ultra Low NOX

- Available in 30, 40 and 50 Gallon capacities in short and tall configurations
- Eco-friendly burner
- Fully SCAQMD rule 1121 & BAAQMD rule 10ng/J NOx emissions compliant
- Oversized aluminum anode rod
- Available in natural gas and liquid propane
- Heavy gauge steel tank with DURA-GLAS™ enamel coating
- CSA certified - meets ANSI & energy efficiency requirements
- NAECA Compliant
- 6 year limited tank and parts warranty / optional 12 year upgrade available

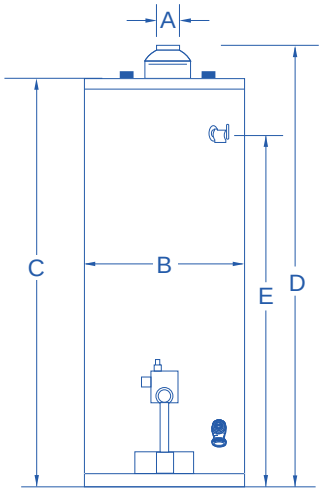

SPECIFICATIONS							DIMENSIONS IN INCHES							
MODEL NUMBER	TANK GALLONS CAPACITY	FIRST HOUR RATING GALLONS	BTU INPUT NAT & LP GAS	GPH REC AT 90° RISE	ENERGY FACTOR	R FACTOR	VENT DIAM	JACKET DIAM	TOP OF HEATER	HEIGHT TO TOP OF WATER	HEIGHT TO SIDE T & P	TOP OF VENT	WTR SPREAD	APROX. SHIP WGT (LBS)
							A	B	C	D	E	F	G	
TALL														
GN30T1-3-6	30	72	35,000	33	0.63	8	3 or 4	16 5/16	58 7/8	60 3/8	53	62 1/8	8	142
GN40T1-3-6	40	71	40,000	38	0.62	8	3 or 4	18 5/16	59 1/8	60 5/8	52 7/8	62 3/8	8	160
GN50T1-3-6	50	84	40,000	38	0.61	8	3 or 4	20 5/16	57 3/4	59 1/4	51 1/8	61	8	187
GN30T2-3-6	30	70	35,000	33	0.64	16	3 or 4	18 5/16	58 7/8	60 3/8	53	62 1/8	8	155
GN40T2-3-6	40	72	40,000	38	0.64	16	3 or 4	20 5/16	59 1/8	60 5/8	52 7/8	62 3/8	8	180
GN50T2-3-6	50	93	40,000	38	0.62	16	3 or 4	22 3/8	57 3/4	59 1/4	51 1/8	61	8	194
LOW BOY														
GN30L2-3-6	30	64	35,000	33	0.63	16	3 or 4	20 5/16	47 1/4	48 3/4	41	50 9/16	8	141
GN40L2-3-6	40	68	37,000	35	0.63	16	3 or 4	22 3/8	49	50 1/2	42 3/8	52 5/16	8	174
GN50L2-3-6	50	82	40,000	38	0.6	16	3 or 4	24 3/8	49 5/8	51 1/8	42 3/4	52 7/8	8	225

Recovery capacity based on actual performance tests

RU 75-76-AS & RU 100-76-AS

- Available in 75 and 100 Gallon capacities
- 2 heavy duty anode rods
- Heavy gauge steel tank with DURA-GLAS™ enamel coating
- Ultra Low NOx emissions
- Available in natural gas and liquid propane
- R-16 Foam Insulation
- ETL Certified to meet NSF/ANSI Standards
- Universal 4" vent size & top mounted 1 1/2" water connections
- Requires 120V power supply
- 6 year limited tank and parts warranty / Optional 12 year upgrade available

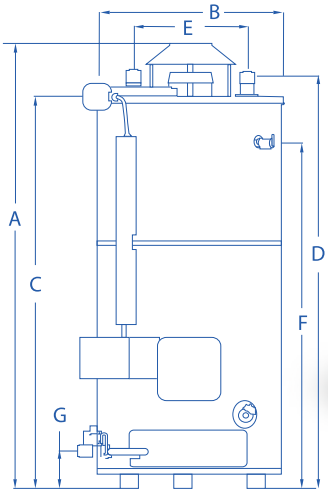

SPECIFICATIONS					DIMENSIONS IN INCHES										
MODEL NUMBERS	TANK GALLONS CAPACITY	BTU INPUT NAT GAS	REC GPH 100° RISE	THERM EFF%	EXTERIOR DIMENSIONS			VENT	TOP PIPE SIZE	WATER I.P.S. CONNECTIONS		GAS I.P.S. CONN.		HGT. TO T & P OPENING	T & P OPENING
										HGT. TO TOP WATER	TOP WATER SPREAD	HGT	SIZE		
					A	B	C			D	E	G		F	
RU-75-76-AS-6	75	76,000	74	80%	70 3/8	26 3/8	63 1/2	4	1.5 NPT	66 1/4	16	5 3/4	3/4 NPT	53	3/4 NPT
RU-75-76-AS-12	75	76,000	74	80%	70 3/8	26 3/8	63 1/2	4	1.5 NPT	66 1/4	16	5 3/4	3/4 NPT	53	3/4 NPT
RU-100-76-AS-6	100	76,000	74	80%	75	28 1/2	68 3/8	4	1.5 NPT	71	16	5 3/4	3/4 NPT	55 5/8	3/4 NPT
RU-100-76-AS-12	100	76,000	74	80%	75	28 1/2	68 3/8	4	1.5 NPT	71	16	5 3/4	3/4 NPT	55 5/8	3/4 NPT

GSN - Low NOx

- Available in 30, 40 and 50 Gallon capacities in short and tall configurations
- Available in natural gas and liquid propane
- Oversized aluminum anode rod
- Heavy gauge steel tank with DURA-GLAS™ enamel coating
- CSA Certified - meets ANSI & energy efficiency requirements
- NAECA Compliant
- 6 year limited tank and parts warranty / optional 12 year upgrade available

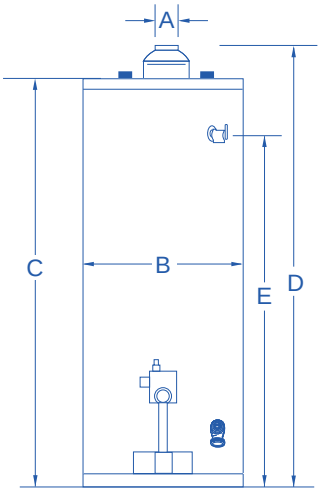

SPECIFICATIONS							DIMENSIONS IN INCHES							
MODEL NUMBER	TANK GALLONS CAPACITY	FIRST HOUR RATING GALLONS	BTU INPUT NAT & LP GAS	GPH RECOVERY AT 90° RISE	ENERGY FACTOR	R FACTOR	VENT DIAM	JACKET DIAM	TOP OF HEATER	HEIGHT TO TOP OF WATER	HEIGHT TO SIDE T & P	TOP OF VENT	WTR SPREAD	APROX. SHIP WGT (LBS)
							A	B	C	D	E	F	G	
TALL														
GSN30T1-3-6	30	69	35,000	33	0.63	8	3 or 4	16 5/16	58 7/8	60 3/8	53	62 1/8	8	140
GSN40T1-3-6	40	69	40,000	38	0.62	8	3 or 4	18 5/16	59 1/8	60 5/8	52 7/8	62 3/8	8	156
GSN50T1-3-6	50	84	40,000	38	0.60	8	3 or 4	20 5/16	57 3/4	59 1/4	51 1/8	61	8	185
GSN30T2-3-6	30	70	35,000	33	0.64	16	3 or 4	18 5/16	58 7/8	60 3/8	53	62 1/8	8	153
GSN40T2-3-6	40	72	40,000	38	0.64	16	3 or 4	20 5/16	59 1/8	60 5/8	52 7/8	62 3/8	8	178
GSN50T2-3-6	50	93	40,000	38	0.62	16	3 or 4	22 3/8	57 3/4	59 1/4	51 1/8	61	8	192
GSN50T2-4-6	50	90	45,000	42	0.6	16	4	22 3/8	57 3/4	59 1/4	51 1/8	61 7/8	8	192
LOW BOY														
GSN30L2-3-6	30	67	35,000	33	0.63	16	3 or 4	20 5/16	47 1/4	48 3/4	41	50 9/16	8	139
GSN40L2-3-6	40	71	37,000	35	0.62	16	3 or 4	22 3/8	49	50 1/2	42 3/8	52 5/16	8	172
GSN50L2-3-6	50	82	40,000	38	0.6	16	3 or 4	24 3/8	49 5/8	51 1/8	42 3/4	52 7/8	8	223

Recovery capacity based on actual performance tests

G-75 T2 AS & G-100 T2 AS

- 75 and 100 Gallon capacities
- Available in 76,000 and 80,000 BTU/Hr input
- Available in natural gas and liquid propane
- Heavy gauge steel tank with DURA-GLAS™ enamel coating
- R-16 foam insulation
- ETL Certified to meet NSF/ANSI standards
- Standard gas burner
- 6 year limited tank and parts warranty / optional 12 year upgrade available

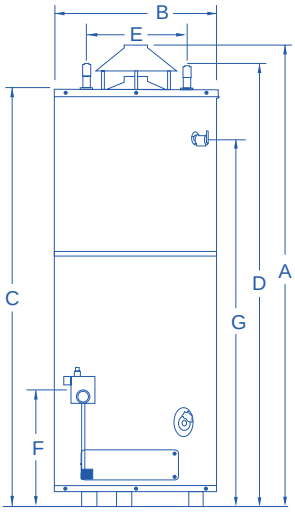

SPECIFICATIONS					DIMENSIONS SHOWN IN INCHES										
MODEL NUMBER	TANK GALLONS CAPACITY	BTU INPUT NAT GAS	REC GPH 100° RISE	THERM EFF %	EXTERIOR DIMENSIONS			VENT	TOP WATER PIPE SIZE	WATER I.P.S. CONNECTIONS		GAS I.P.S CONN.		HGT. TO T & P OPENING	T & P OPENING
										HGT. TO TOP CONNECT	TOP WATER SPREAD	HGT	SIZE		
					A	B	C			D	E	F		G	
G-75T2 AS	75	76,000	74	80%	69 1/4	26 3/8	62 1/2	4	1	66 1/8	16	17	1/2	55	3/4
G-100T2 AS	100	80,000	78	80%	73 7/8	28 3/8	67	4	1 1/4	70 7/8	16	17	1/2	59 3/8	3/4

EN-30 / 40 / 50

- Available in 30, 40 and 50 Gallon capacities in High, Tall and Short configurations
- Fully automatic surface mounted thermostat
- Non-CFC foam insulation
- Immersed incoloy heating element
- UL Listed
- NAECA Compliant
- Heavy gauge steel tank with DURA-GLAS™ enamel coating
- 6 year limited tank and parts warranty / optional 12 year upgrade available

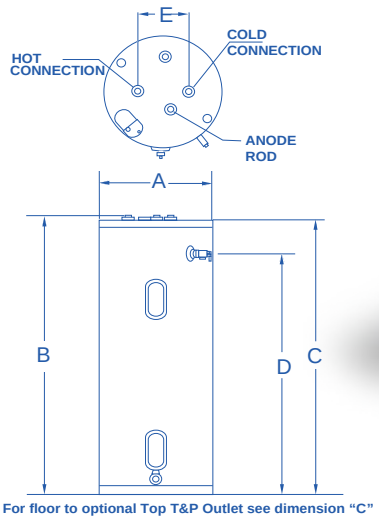

For floor to optional Top T&P Outlet see dimension "C"

SPECIFICATIONS								DIMENSIONS IN INCHES					
								FLOOR TO					
MODEL NUMBER	GALLONS CAPACITY	FIRST HOUR RATING GALLONS	STANDARD	MAXIMUM	GPH REC @ 90 RISE	ENERGY FACTOR	R FACTOR	JACKET DIAM A	WATER CONN B	TOP OF HEATER C	SIDE T & P D	WTR SPREAD E	APROX SHIP WGT (LBS)
HIGH													
EN40H-6	40	48	4,500	6,000	21	0.95	24	20 1/4	64 1/2	63	55 1/2	8	130
EN50H-6	50	59	4,500	6,000	21	0.95	24	22 1/4	62 5/8	61 1/8	53 1/3	8	150
TALL													
EN30T-6	30	42	4,500	6,000	21	0.95	24	20 1/4	51	49 3/8	42	8	108
EN40T-6	40	51	4,500	6,000	21	0.95	24	22 1/4	52	50 1/2	42 3/5	8	119
EN50T-6	50	51	4,500	6,000	21	0.95	24	24 1/4	51 5/8	50 1/8	42	8	149
LOW BOY													
EN30L-6	30	41	4,500	6,000	21	0.95	24	24 1/4	35	33 1/2	25 3/8	8	116
EN40L-6	40	46	4,500	6,000	21	0.95	24	26 1/4	37 1/8	35 5/8	27	8	153
EN50L-6	50	49	4,500	6,000	21	0.95	24	28 1/4	37	35 1/2	26 1/3	8	164

Point-of-Use

- Designed for locations where long water pipes are not practical and for spaces underneath counters, mop sinks and cabinets or in other confined areas
- Available in 2.5, 6, 12 & 19 Gallons capacities
- Immersed incoloy heating element
- UL Listed
- Heavy gauge steel tank with DURA-GLAS™ enamel coating
- Commercial 3 year limited tank & 1 Year parts warranty
- Residential 6 year limited tank & parts warranty

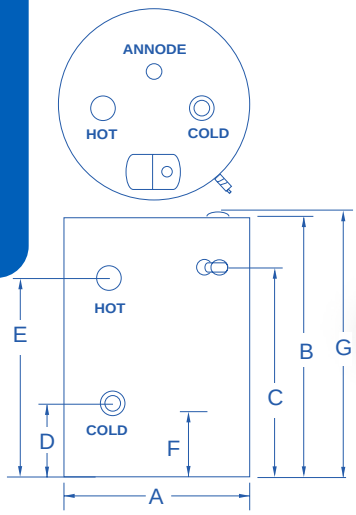

SPECIFICATIONS				DIMENSIONS IN INCHES								
MODEL NUMBERS	TANK GALLONS CAPACITY	STANDARD KW INPUT	MAXIMUM KW INPUT	EXTERIOR DIMENSIONS FLOOR TO							WATER CONNECTIONS	APROX SHIP WGT (LBS)
				JACKET DIAM	TOP OF HEATER	T & P VALVE	SIDE COLD	SIDE HOT	DRAIN VALVE	TOP WATER CONNECTIONS		
				A	B	C	D	E	F	G		
CE-2.5-AS	2.5	1.44*	1.5*	10	12 7/8	N/A	N/A	N/A	2 3/4	13 5/8	3/4	22.5
CE-6-AS	6	1.5	4.5	13 7/8	14 5/8	10 7/8	2 3/4	10 7/8	2 3/4	15 1/2	3/4	38.5
CE-12-AS	12	1.5	5.5	15 7/8	21 1/2	17 1/4	2 3/4	17 1/4	2 3/4	21 7/8	3/4	61.0
CE-20-AS	19	1.5	6	18 1/2	24 1/2	19 7/8	2 3/4	19 7/8	2 3/4	24 7/8	3/4	78.0

*CE 2.5 AS is available in 1440 Watts, 120V, 240V & 1500V only.
By design, the CE-2.5-AS model specifications do not apply: T&P valve, side cold & side hot.

Tankless Condensing

- Available in 180,000 & 199,000 BTU configurations
- 96% Efficiency rating
- Energy star certified
- Flow rates up to 11 GPM
- Standardized design for indoor wall-mounted installations and ANSI A21.10.3 / CSA 4.3 certified
- Durable high end steel casing with polyester coating & stainless steel heat exchanger
- Eco Friendly - Ultra Low NOx combustion system for use with liquid propane or natural gas
- Innovative built-in safety features include gas leak detectors
- Additional features include; exhaust high temperature sensor, flame sensor, overheating shut-off system, gas leak detection sensor & water temperature sensor
- Uses 14% to 15% less energy than equipment that meets minimum federal standard
- 12 Year limited heat exchanger warranty & 5 year limited parts warranty

SPECIFICATIONS			
MODELS		TCWH180S-AS	TCWH199S-AS
INSTALLATION		INDOOR, WALL HUNG, FULLY CONDENSING	
MINIMUM / MAXIMUM INPUT RATE (BTU/h)		18,000 / 180,000	19,000 / 199,000
FLUE SYSTEM		SEALED COMBUSTION DIRECT VENT	
VENT RUN		2” (15 FEET), 3” (100 FEET) / SCHEDULE 40 PVC, CPVC, PP	
WEIGHT (LBS)		88	
ORIFICE SIZE	NG	0.374” (9.5mm)	
	LP	0.275” (7.0mm)	
GAS SUPPLY PRESSURE	NG	3.5” to 10.5” WC	
	LP	8.0” to 13.0” WC	

Electric Heat Pump Water Heater

- Available in 50 Gallons capacity
- 260% Efficiency rating
- 2 times more efficient than residential electric water heaters
- Certified at 300 PSI test pressure & 150 PSI working pressure. All tanks are 100% hydrostatically tested at the factory
- Magnesium anode rod ensures a longer tank life
- High efficiency compressor
- Proprietary enamel coated tank
- Operational Modes – Automatic mode, Economy mode, Electric mode & Vacation mode
- Primary and secondary condensate drain hoses
- 10 Year limited warranty on inner-glass lined tank & 10 year limited warranty on all component parts

MODEL NUMBER	GALLON CAPACITY	WATER CONNECTION	R FACTOR	JACKET DIAM	POWER SUPPLY	HEAT PUMP RECOVERY RATE	DIMENSIONS IN INCHES TO FLOOR					APROX SHIP WGT (LBS)
							COLD WATER INLET	HOT WATER OUTLET	TOP OF HEATER	T & P VALVE	TOP OF DISPLAY	
HPWH50G-AS	50.2	3/4 NPT	24	22.4	Ph-V-Hz 1-208~240-60	8.5 GPH @ 70°F rise	26.8	40.7	65 3/4	40.7	60°	243

Residential Water Heaters

With the new NAECA regulation having taken affect on April 16th, 2015, American Standard Water Heaters is dedicated to supporting all customers during this transition. While some of our water heater models will have slight variances there is absolutely no requirement for our customers to downsize, relocate or make other modifications (I.E., power cord installation, insulation blanket additions, dampers or ducts to install, etc.) to your current or future American Standard Water Heater(s).

The National Appliance Energy Conservation Act (NAECA) of 2015 has set higher energy efficiency standards for water heaters and subsequently impacted the way these products are designed and manufactured. The new requirements call for higher Energy Factor (EF) ratings on virtually all residential gas, electric, and oil water heaters. NAECA 2015 also affects some light-duty commercial water heaters.

American Standard®

WATER HEATERS

Residential GAS

NOT WIDER... JUST SMARTER

NAECA Approved Water Heaters

Utilizes the Same Space as Before*

- NO insulation blankets
- NO power cord
- NO damper

Setting The New Standard

American Standard®

WATER HEATERS

Commercial Water Heaters

Product Line

American Standard Water Heaters *offers a complete line of products for all commercial water heating needs. Our Commercial Line features the revolutionary glass-lined tanks made of Dura-Glas™ ensuring longer durability. Our commercial models meet all current standards including: CSA, UL, ASME, ETL Intertek, ASHRAE. American Standard Commercial Water Heaters - Setting the New Standard!*

Features & Benefits of Commercial Water Heaters

Dura Glas™ Enamel, Heavy Duty Multi Flue Steel Tank
Fired at 1600° F for optimum protection against corrosion effects.

Brass Drain Valve
Factory installed brass drain valve. Durable to prevent unintentional breakage.

Temperature & Pressure Relief Valve
Factory installed ASME rated T & P valve.

Full Sized Hand-Hole Clean-Out
Allows easy tank inspections and/or removal of sediment deposits.

Magnesium Anode Rods
To protect tank life against corrosion effects.

Electronic Direct Spark Ignition System
Saves fuel by eliminating constant burning pilot.

Automatic Motorized Flue Damper
To reduce heat loss during standby periods for lowest operating costs.

Maganode Warranty Extension
Warranty extension from 3 to 5 years; on tanks only.

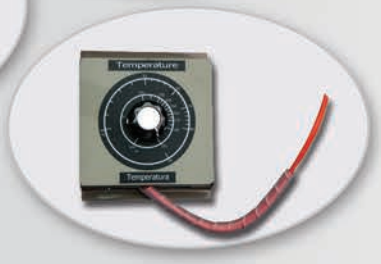

Fully Adjustable Control
Up to 180° F temperature.

American Standard®
WATER HEATERS

Setting The New Standard

Standard GAS Light Duty

- 75 Gallon capacity at 76,000 BTU/Hr rating
- 100 Gallon capacity at 80,000 BTU/Hr rating
- Available in natural gas and liquid propane
- Temperature and pressure relief valve
- 2 magnesium anode rods
- R-16 foam insulation
- ETL Listed to meet NSF/ANSI standards
- Heavy gauge steel tank with DURA-GLAS™ enamel coating
- 3 Year limited tank and 1 year parts warranty
- Upgradeable to a 5 year limited tank warranty

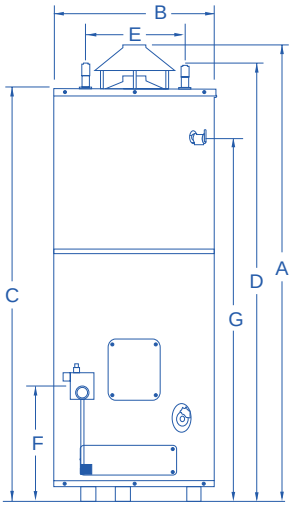

SPECIFICATIONS					DIMENSIONS SHOWN IN INCHES										
MODEL NUMBER	TANK GALLONS CAPACITY	BTU INPUT L.P. GAS	REC GPH 100° RISE	THERM EFF %	EXTERIOR DIMENSIONS			VENT	TOP WATER PIPE SIZE	WATER I.P.S. CONNECTIONS		GAS I.P.S. CONN.		HGT TO T & P OPENING	T & P OPENING
										HEIGHT TO TOP CONNECT	TOP WATER SPREAD	HGT	SIZE		
					A	B	C			D	E	F		G	
D 75-76-AS	75	76,000	74	80%	69 1/4	26 3/8	62 1/2	4	1	66 1/8	16	17	1/2	55	3/4
D 100-83-AS	100	80,000	78	80%	73 7/8	28 3/8	67	4	1 1/4	70 7/8	16	17	1/2	59 3/8	3/4

Standard GAS Heavy Duty

- Available in 75, 80 and 100 Gallon capacities
- 12 Models ranging from 125,000 up to 512,000 BTU/Hr
- Available in natural gas and liquid propane
- Direct spark ignition damper
- Magnesium anode rods
- Heavy gauge steel tank with DURA-GLAS™ enamel coating
- CSA Certified - meets ANSI & energy efficiency requirements
- Select models available in ASME
- 3 Year limited tank and 1 year parts warranty
- Upgradeable to a 5 year limited tank warranty

View Specification Data on Next Page...

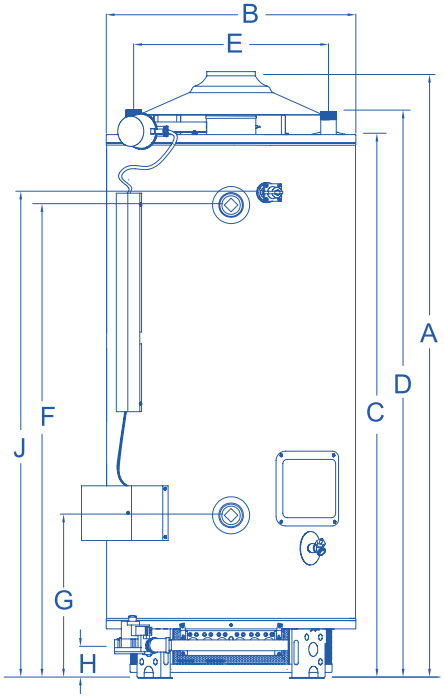

SPECIFICATIONS

DIMENSIONS IN INCHES				D-80-125-AS	D-80-165-AS	D-80-180-AS	D-80-199-AS	D-100-199-AS	D-100-T-199-AS	D-100-250-AS D-100-250-ASME	D-100-270-AS D-100-270-ASME	D-100-300-AS D-100-300-ASME	D-75-365-AS D-75-365-ASME	D-75-399-AS D-75-399-ASME	D-80-512-AS D-80-512-ASME
MODEL NUMBER															
TANK GALLON				80	80	80	80	100	100	100	100	75	75	75	80
BTU INPUT NATURAL				125,000	165,000	180,000	199,000	199,000	250,000	270,000	300,000	365,000	399,900	399,900	512,000
REC GPH 100 RISE				121	160	175	194	194	242	262	291	354	387	387	496
THERMAL EFF %				82%	82%	82%	83%	82%	82%	82%	80%	83%	82%	82%	80%
EXTERIOR DIMENSIONS			A	73 1/4	75 1/4	75 1/4	68 1/4	73 5/8	73 5/8	73 5/8	73 5/8	76 1/16	76 1/16	76 1/16	73 1/16
			B	26 1/4	26 1/4	26 1/4	28 1/4	30 1/4	30 1/4	30 1/4	30 1/4	30 1/4	30 1/4	30 1/4	30 1/4
			C	67 1/4	67 1/2	67 1/2	60 1/2	66	66	66	66	66 1/16	66 1/16	66 1/16	66 1/16
VENT				5	6	6	6	6	6	6	7	8	8	8	10
TOP PIPE SIZE				1 1/2	1 1/2	1 1/2	1 1/2	1 1/2	1 1/2	1 1/2	1 1/2	N/A	N/A	N/A	N/A
REAR & FRONT WATER				2	2	2	2	2	2	2	2	2	2	2	2
WATER I.P.S. CONN. (TOP REAR & FRONT)	HGT. TO TOP WATER		D	70	70	70	63	68 1/4	68 1/4	68 1/4	68 1/4	68 1/4	68 1/4	68 1/4	68 1/4
	TOP WATER SPREAD		E	19 5/8	19 5/8	19 5/8	21 1/4	23 5/8	23 5/8	23 5/8	23 5/8	N/A	N/A	N/A	N/A
	HGT. TO REAR & FRONT HOT		F	50 3/8	56 3/8	56 3/8	52	57 1/2	57 1/2	57 1/2	57 1/2	57	57	57	57
	HGT. TO REAR & FRONT COLD		G	22 3/4	22 3/4	22 3/4	18 3/4	20	20	20	20	19 1/4	19 1/4	19 1/4	19 1/4
GAS LP S. CONN.			H	4	4	4	4	4	4	4	4	4	4	4	4
SIZE			I	1/2	1/2	1/2	1	1	3/4	3/4	3/4	3/4	3/4	3/4	1
HGT. TO T & P			J	56 3/8	56 3/8	56 3/8	53 5/8	57 1/2	57 1/2	57 1/2	57 1/2	58 1/4	58 1/4	58 1/4	58 1/4
T & P OPENING				3/4	3/4	3/4	3/4	3/4	1	1	1	1	1	1	1

American Standard®
WATER HEATERS

Ultra Low NOx GAS - Light Duty

- Available in 75 and 100 Gallon capacities
- Exceeds SCAQMD & BAAQMD air quality standards
- 76,000 BTU/hr rating
- R-16 Non-CFC foam insulation
- 2 Magnesium anode rods
- Available in natural gas and liquid propane
- Automatic motorized flue damper
- Heavy gauge steel tank with DURA-GLAS™ enamel coating
- ETL listed to meet NSF/ANSI standards
- 3 Year limited tank and 1 year parts warranty
- Upgradeable to a 5 year limited tank warranty

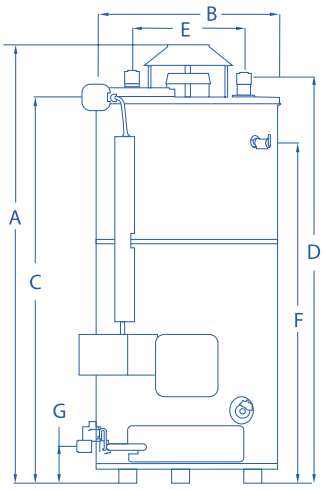

SPECIFICATIONS					DIMENSIONS IN INCHES										
MODEL NUMBERS	TANK GALLONS CAPACITY	BTU INPUT NAT GAS	REC GPH 100° RISE	THERM EFF %	EXTERIOR DIMENSIONS				TOP PIPE SIZE	WATER I.P.S. CONNECTIONS		GAS I.P.S. CONN.		HGT. TO T & P OPENING	T & P OPENING
										HGT. TO TOP WATER	TOP WATER SPREAD	HGT	SIZE		
					A	B	C	VENT		D	E	G		F	
ULN-75-76	75	76,000	74	80%	70 3/8	26 3/8	63 1/2	4	1 ½ NPT	66 1/4	16	5 3/4	3/4 NPT	53	3/4 NPT
ULN-100-76	100	76,000	74	80%	75	28 1/2	68 3/8	4	1 ½ NPT	71	16	5 3/4	3/4 NPT	55 5/8	3/4 NPT

Ultra Low NOx GAS - Heavy Duty

- Available in 75, 80 and 100 Gallon capacities
- Exceeds SCAQMD & BAAQMD air quality standards
- 12 Models ranging from 125,000 up to 480,000 BTU/hr rating
- Available in natural gas and liquid propane
- Magnesium anode rods
- Automatic motorized flue damper
- Electronic direct spark ignition system
- Heavy gauge steel tank with DURA-GLAS™ enamel coating
- ETL listed to meet NSF/ANSI standards
- 3 Year limited tank and 1 year parts warranty
- Upgradeable to a 5 year limited tank warranty

View Specification Data on Next Page...

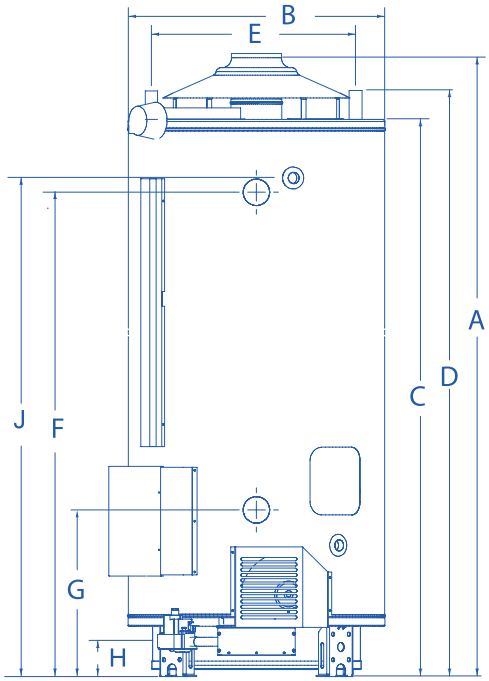

SPECIFICATIONS

DIMENSIONS IN INCHES		ULN 80-125 AS	ULN 80-165 AS	ULN 80-180 AS	ULN 80-199 AS	ULN 100T-199 AS	ULN 100-199 AS	ULN 100-250 AS	ULN 100-270 AS	ULN 100-300 AS	ULN 80-365 AS	ULN 80-399 AS	ULN 80-512 AS
MODEL NUMBER		ULN 80-125 AS	ULN 80-165 AS	ULN 80-180 AS	ULN 80-199 AS	ULN 100T-199 AS	ULN 100-199 AS	ULN 100-250 AS	ULN 100-270 AS	ULN 100-300 AS	ULN 80-365 AS	ULN 80-399 AS	ULN 80-512 AS
TANK GALLON		80	80	80	80	100	100	100	100	100	80	80	80
BTU INPUT		125,000	165,000	180,000	199,000	199,000	199,000	250,000	270,000	300,000	365,000	399,900	480,000
REC GPH 100°		121.4	155.7	174.5	200.8	196	197.1	246.5	264	301.6	355.5	390.7	474.8
THERM EFF%		80.1	80.3	80	83.3	81.3	81.7	81.4	80.7	83	80.4	80.8	81.6
EXTERIOR DIMENSIONS		71 3/4	72 5/8	72 5/8	68 1/8	78 1/8	73 1/4	72 5/8	72 5/8	72 5/8	74 1/4	74 1/4	76 1/4
		26 1/4	26 1/4	26 1/4	28 1/4	28 1/4	30 1/4	30 1/4	30 1/4	30 1/4	30 1/4	30 1/4	30 1/4
		65	65	65	60 1/2	70 1/2	65 5/8	65 5/8	65 5/8	65 5/8	66 1/4	66 1/4	68 1/4
VENT		5	6	6	6	6	6	6	7	7	8	8	10
TOP PIPE SIZE		1 1/2	1 1/2	1 1/2	1 1/2	1 1/2	1 1/2	1 1/2	1 1/2	1 1/2	N/A	N/A	N/A
REAR & FRONT WATER CONN.		2	2	2	2	2	2	2	2	2	2	2	2
WATER I.P.S. CONN. (TOP REAR & FRONT)	HGT. TO TOP WATER	69	69	69	63 5/8	73 5/8	67 5/8	67 5/8	67 5/8	67 5/8	N/A	N/A	N/A
	TOP WATER SPREAD	19 5/8	19 5/8	19 5/8	21 1/4	21 1/4	23 5/8	23 5/8	23 5/8	23 5/8	N/A	N/A	N/A
	HGT. TO REAR & FRONT HOT	55 1/2	55 1/2	55 1/2	52	62	57 1/2	57 1/2	57 1/2	57 1/2	57	57	59
	HGT. TO REAR & FRONT	29 1/4	29 1/4	29 1/4	18 3/4	18 3/4	20	20	20	20	19 1/4	19 1/4	21 1/4
GAS I.P.S. CONN.		4	4	4	4	4	4	4	4	4	4 1/2	4 1/2	6 1/2
SIZE		3/4	3/4	3/4	3/4	3/4	3/4	3/4	3/4	3/4	3/4	3/4	1
HGT. TO T & P		57 7/8	57 7/8	57 7/8	53 5/8	63 5/8	58 7/8	58 7/8	58 7/8	58 7/8	58 1/4	58 1/4	60 1/4
T & P OPENING		3/4	3/4	3/4	3/4	3/4	3/4	3/4	3/4	3/4	1	1	1
WIDTH WITH BLOWER		20	20	20	21	21	22	22	22	22	22	22	23 1/2
		6 3/4	6 3/4	6 3/4	6 3/4	6 3/4	6 3/4	6 3/4	6 3/4	6 3/4	6 3/4	6 3/4	8
		33 1/4	33 1/4	33 1/4	35 1/4	35 1/4	37 1/4	37 1/4	37 1/4	37 1/4	37 1/4	37 1/4	38 3/4

High Efficiency GAS

- 75 and 100 Gallon capacities
- Available in 125,000 and 250,000 BTU/Hr rating
- Energy star certified / up to 96% efficiency
- Exceeds SCAQMD & BAAQMD air quality Standards
- 3 Magnesium anode rods
- Available in natural gas and liquid propane
- Heavy gauge steel tank with DURA-GLAS™ enamel coating
- ETL listed to meet NSF/ANSI standards
- Vents with 2" PVC pipe up to 65 equivalent feet (135' utilizing 3" pipe)
- 3 Year limited tank and 1 year parts warranty
- Upgradeable to a 5 year limited tank warranty

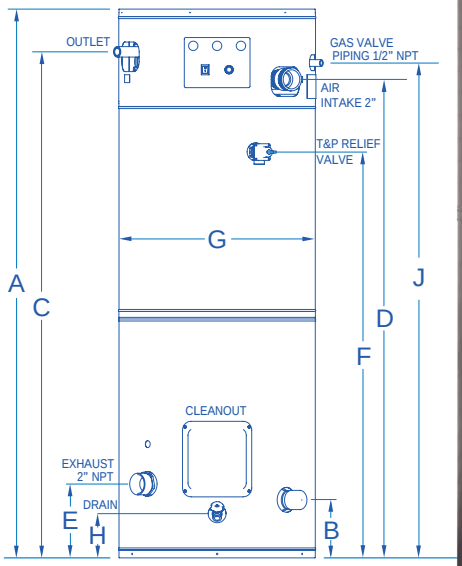

SPECIFICATIONS						ALL DIMENSIONS IN INCHES "TO" IS FROM FLOOR													
* For Propane (LP) Gas Model add Suffix "LP"																			
MODEL NUMBER*	U.S. GALLONS CAPACITY	1ST HOUR DELIVERY AT 100 F° RISE	REC GPH 100 F° RISE	BTU INPUT L.P. GAS	THERM EFF %	TO TOP OF HTR	TO COLD IN	TO HOT OUT	TO AIR INTAKE	TO EXHAUST	TO T & P	HTR DIAM	TO DRAIN	TO GAS INLET	WATER CONN		GAS CONN	T & P CONN	APROX SHIP WT LBS
						A	B	C	D	E	F	G	H	J	IN	OUT			
HE- 70-125	70	195	146	125,000	96.4%	69	7 1/4	63 3/4	60 1/8	9 1/4	51	26 3/8	5 1/2	62 1/4	1 1/2	1 1/2	1 1/2	3/4	290
HE-100-150	100	245	175	150,000	98.0%	76 7/8	7 1/4	71 1/2	68 1/8	9 1/4	58	28 3/8	5 1/2	70 1/4	1 1/2	1 1/2	1 1/2	3/4	490
HE-100-199	100	30 5	235	199,000	97.5%	76 7/8	7 1/4	71 1/2	68 1/8	9 1/4	58	28 3/8	5 1/2	70 1/4	1 1/2	1 1/2	1 1/2	3/4	490
HE-100-250	100	35 8	288	250,000	95.3%	76 7/8	7 1/4	71 1/2	68 1/8	9 1/4	58	28 3/8	5 1/2	70 1/4	1 1/2	1 1/2	1 1/2	1	490

Commercial Storage Tanks

- Available in 80, 120 & 200 Gallon capacities
- Select models available in ASME
- 2" Non-CFC foam insulation
- Certified 300 PSI test & 150 PSI working pressures
- 100% Hydrostatically factory tested
- Heavy gauge steel tank with DURA-GLAS™ enamel coating
- UL listed
- 2 Magnesium anode rods
- 5 Year limited tank and 1 year parts warranty

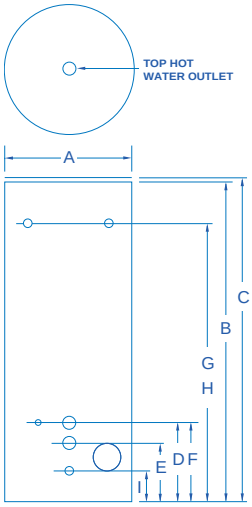

SPECIFICATIONS		EXTERIOR DIMENSIONS												
			HEIGHT TO								CONNECTIONS			
MODEL NUMBER	TANK GALLONS CAPACITY	JACK DIAM.	TOP OF TANK	TOP HOT WATER OUTLET	TOP CIRC. CONN.	BOTTOM CIRC. CONN.	AQUA STAT CONN.	THERMO METER CONN.	T & P RIGHT SIDE OUTLET	DRAIN VALVE	TOP HOT WATER	CIRCULATION LINE	AQUASTAT & THERMOMETER	T & P VALVE
		A	B	C	D	E	F	G	H	I				
ST-80-AS	80	26 1/4	56 1/8	56 1/4	16 1/4	11 1/4	16 1/4	48 9/16	48 9/16	6 1/2	2	2	3/4	1
ST-120-AS	119	28 1/4	67 7/8	68	16 1/4	11 1/4	16 1/4	60	60	6 1/2	2	2	3/4	1
ST-120-ASME	120	28 1/4	67 7/8	68	16 1/4	11 1/4	16 1/4	60	60	6 1/2	2	2	3/4	1
ST-200-ASME	200	32	78	79 9/16	16 1/4	11 1/4	16 1/4	70 1/4	70 1/4	4 1/2	2 1/2	2 1/2	3/4	1

Commercial Light Duty Electric

- Available in 30, 40, 50, 66, 80 & 120 Gallon capacities in Low Boy and Tall configurations
- 120, 208, 240, 277 & 480 voltages
- 30, 40 & 50 Gallon capacities available in single or three phase
- 66, 80 & 120 Gallon capacities available in Three Phase
- Available from 3KW to 12KW
- Surface mounted thermostat
- Magnesium anode rod
- Heavy gauge steel tank with DURA-GLAS™ enamel coating
- UL listed
- 3 or 5 Year limited tank and 1 year parts warranty

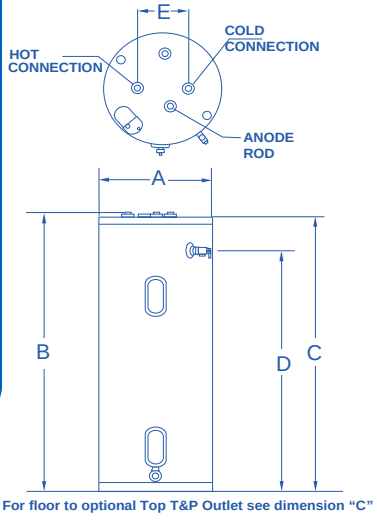

SPECIFICATIONS		DIMENSIONS IN INCHES							
MODEL NUMBER	GAL	JACKET DIAM*	FLOOR TO			WTR SPREAD	STANDARD VOLTAGE	MAXIMUM KW INPUT	STANDARD SHIP WGT (LBS)
			WATER CONN	TOP OF HEATER	SIDE T & P				
		A	B	C	D	E			
TALL									
LDN-CE-30T-AS	30	20 1/4	51	49 3/8	42	8	240	12	108
LDN-CE-40T-AS	40	22 1/4	52	50 1/2	42 3/5	8	240	12	119
LDN-CE-50T-AS	50	24 1/4	51 5/8	50 1/8	42	8	240	12	149
LD-CE-66T-AS	66	22 1/4	62	59 1/4	53	8	240	12	205
LD-CE-80T-AS	80	24 1/4	62 3/8	59 5/8	52 7/8	8	240	12	231
LD-CE-120T-AS	119	28 1/4	65 3/4	63	55 1/8	8	240	12	328
LOW BOY									
LDN-CE-30S-AS	30	24 1/4	35	33 1/2	25 3/8	8	240	12	116
LDN-CE-40S-AS	40	26 1/4	37 1/8	35 5/8	27	8	240	12	153
LDN-CE-50S-AS	50	28 1/4	37	35 1/2	26 1/3	8	240	12	164
*FOR BACK TO FRONT OF HEATER ADD 2 1/8" TO "A" TO ALLOW FOR UPPER DOOR DEPTH									

Commercial Electric

- Available in 52, 80 and 120 Gallon capacities
- Designed for Point-of-Use applications & high water output requirements
- Available from 6 KW to 54 KW
- 208, 240, 277 and 480 voltages
- 2 magnesium anode rods
- Heavy gauge steel tank with DURA-GLAS™ enamel coating
- Individual thermostats
- UL listed
- 3 Year Limited tank and 1 year parts warranty

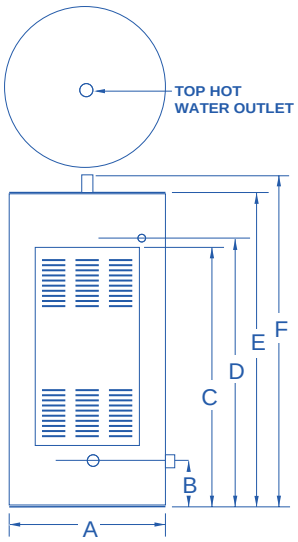

SPECIFICATIONS		DIMENSIONS IN INCHES								
		EXTERIOR DIMENSIONS								
			FLOOR TO							
MODEL NUMBERS	TANK GALLONS CAPACITY	JACKET DIAM	COLD WATER INLET	TOP OF CONTROL BOX	T & P VALVE	TOP OF HOT WATER	HOT WATER OUTLET	FRONT CONTROL ACCESS PANEL	WATER CONN.	APROX. SHIP WGT (LBS)
		A	B	C	D	E	F			
CE-52-AS	52	24 3/4	4 3/4	48 1/16	42 1/4	49 1/4	53	4 5/8	1 1/2	271
CE-80-AS	80	28 7/16	5	48 1/4	46 1/2	54 3/8	57 7/8	4 5/8	1 1/2	366
CE-120-AS	120	30 1/4	4 3/4	48 1/16	58 1/4	66	69 5/8	4 5/8	1 1/2	483

American Standard®

WATER HEATERS

Commercial GAS

Efficiently Delivering LARGE Amounts of HOT WATER

Setting The New Standard

American Standard®

WATER HEATERS

HIGH EFFICIENCY

Water Heater

Energy Star Certified

Thermal Efficiency up to 96%

ENERGY STAR

Setting The New Standard

American Standard®

WATER HEATERS

Worry-free, Leak-free & Built to Last!

Setting The New Standard

American Standard®
WATER HEATERS

Warranties

Residential

Standard on our EN Models- low watt Incoloy elements.
6 Year limited tank and parts warranty / optional 12 year upgrade available.

Commercial

Designed for universal replacement with top water connections (1 1/2") and (2") front and rear water connections.

Every Commercial water heater is delivered with a standard 4 Year limited tank and 1 year parts warranty / upgradeable to a 5 year limited tank warranty.

Upgrade kit contains additional anode rod with hand hole clean outs.

For complete information, consult written warranty or go to

www.americanstandardwaterheaters.com

Toll Free: (800) 900-9063

For Technical Assistance:

24 hrs service, Trouble shooting & Technical info.
Hot Line Central Warranty Services Dispatch.

Extension: #3
Fax: (909) 392-7302
24 hours service

For Parts & Service Assistance:

Parts Orders, Services Calls
Services Agents Relations

Extension: #5
Fax: (909) 392-7302
Monday to Friday
8:00 a.m. to 4:30 p.m. PST

24 7 TECH SUPPORT

American Standard®
WATER HEATERS

561 New York Drive, Pomona, California 91768
Toll Free: 1 (800) 900-9063
www.americanstandardwaterheaters.com

American Standard Water Heaters reserves the right to make product changes or improvements at any time without notice.