EST. 1856

McDonald®

21000 Series

4” No-Lead Brass Submersible Pumps

5/15

Table of Contents

Page

General Information.....2-5

21000 Series Pumps

J Series - 5 GPM.....6-7
V Series - 7 GPM.....8-9
K Series - 10 GPM..... 10-11
L Series - 15 GPM..... 12-13
P Series - 20 GPM..... 14-15
M Series - 25 GPM..... 16-17

Motors / Control Boxes

4” Water Well / High Thrust.....18
Control Boxes.....19

Page

Constant Pressure

Subdrive.....20
Monodrive.....21

Contactors

Contactors for three phase motors.....22

Pump Accessories

Check Valves.....22
Brass Tank Tees.....22
Pressure Relief Valves.....22
Pipe Holder.....23
Air Volume Controls.....23
Floats / Float Valve.....23
Well Seals.....23
Switches.....23

A.Y. McDonald offers a full line of four inch submersibles ranging from 1/3 through 5 horsepower, with flow rates ranging from 5 to 25 GPM. Our 21000 submersibles offer peak capacity performance in 5, 7, 10, 15, 20, and 25 GPM models.

All four-inch submersibles are supplied with grounded leads meeting the National Electrical Code (N.E.C.) specifications.

- Powered by NEMA approved stainless steel motors with built-in lightning protection
- Three Wire single phase models include pump, motor, 48” leads, control box and check valve.
- Two Wire single phase models include pump, motor, 48” leads and check valve.
- Three Wire three phase models include pump, motor 48” leads, contactors, and check valve.
- The charts on the following page will assist you in choosing the pump that meets your needs.

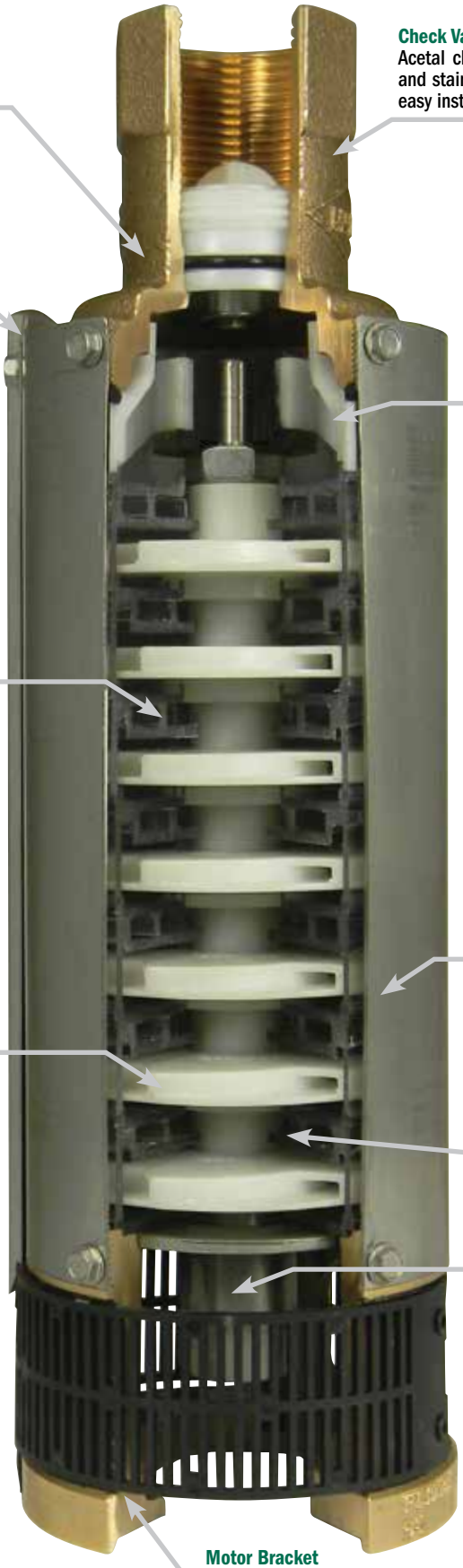

Discharge Casting
No-Lead Brass Alloy

Check Valve
Acetal check valve poppet and seal housing, Buna-N O-ring, and stainless steel washer head retention screw. Threaded for easy installation or removal. Working pressure of 400 PSI.

Cable Guard
Stainless steel cable guard protects motor leads. Angled top helps keep leads stationary when lowering and raising submersible pump.

Discharge Bearing
Rubber surrounding the stainless steel shaft provides superior wear resistance against the harshest conditions while maintaining shaft alignment. Self lubricating for long life.

Diffuser
Polycarbonate durable, corrosion, and abrasion resistant. Designed for efficient performance and superior sand handling capability.

A.Y. McDonald uses it's **time proven captured stack design**. The captured stack design incorporates sand notches into the diffusers, which has proven, over time, to keep sand flowing thru the stack.

Impeller
Glass Bead Acetal. This smooth and flexible material is precision engineered for maximum performance.

Polished Stainless Steel Shell
Heavy duty and threaded at both ends for easy field service.

Shaft
7/16" 300 series stainless steel, hex design for positive impeller drive. Each shaft individually measured for straightness with strict tolerances.

- Once assembled, each pump is individually tested to assure performance within design specifications.
- Each pump is stamped with the tester's "signature" marking to assure quality control.
- Non-corrosive in-take screen
- Cutaway illustrates features and is not indicative of specific model performance.

Stainless steel motor coupling.

Motor Bracket
No-Lead Brass Alloy

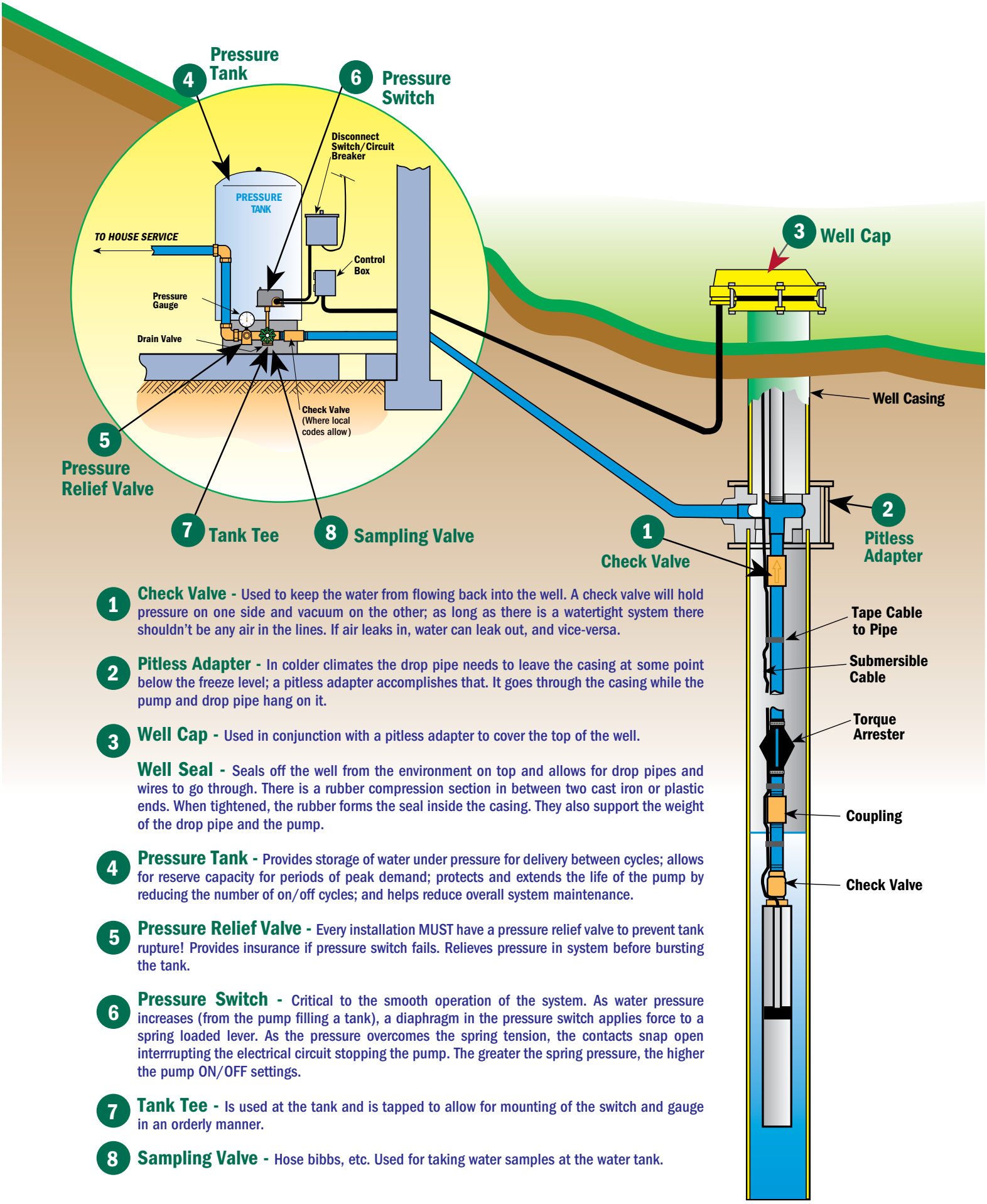

1 **Check Valve -** Used to keep the water from flowing back into the well. A check valve will hold pressure on one side and vacuum on the other; as long as there is a watertight system there shouldn't be any air in the lines. If air leaks in, water can leak out, and vice-versa.

2 **Pitless Adapter -** In colder climates the drop pipe needs to leave the casing at some point below the freeze level; a pitless adapter accomplishes that. It goes through the casing while the pump and drop pipe hang on it.

3 **Well Cap -** Used in conjunction with a pitless adapter to cover the top of the well.

Well Seal - Seals off the well from the environment on top and allows for drop pipes and wires to go through. There is a rubber compression section in between two cast iron or plastic ends. When tightened, the rubber forms the seal inside the casing. They also support the weight of the drop pipe and the pump.

4 **Pressure Tank -** Provides storage of water under pressure for delivery between cycles; allows for reserve capacity for periods of peak demand; protects and extends the life of the pump by reducing the number of on/off cycles; and helps reduce overall system maintenance.

5 **Pressure Relief Valve -** Every installation MUST have a pressure relief valve to prevent tank rupture! Provides insurance if pressure switch fails. Relieves pressure in system before bursting the tank.

6 **Pressure Switch -** Critical to the smooth operation of the system. As water pressure increases (from the pump filling a tank), a diaphragm in the pressure switch applies force to a spring loaded lever. As the pressure overcomes the spring tension, the contacts snap open interrrupting the electrical circuit stopping the pump. The greater the spring pressure, the higher the pump ON/OFF settings.

7 **Tank Tee -** Is used at the tank and is tapped to allow for mounting of the switch and gauge in an orderly manner.

8 **Sampling Valve -** Hose bibbs, etc. Used for taking water samples at the water tank.

How to Order 4” Submersible Pumps

Order by Model Number Example: 21050K3A

21

Pump Model
4" Submersible
No-Lead Brass Alloy
Pumps are **Model 21**

050

Horsepower
030 - 1/3 HP
050 - 1/2 HP
075 - 3/4 HP
100 - 1 HP
150 - 1 1/2 HP
200 - 2 HP
300 - 3 HP
500 - 5 HP

K

Series
J Series - 5 GPM
V Series - 7 GPM
K Series - 10 GPM
L Series - 15 GPM
P Series - 20 GPM
M Series - 25 GPM

3

Wires
Two wire or
Three wire

A

Other
Leave blank for 230V
60 HZ, Single Phase (Standard)
A - 115V Single Phase
C - 200V Three Phase
Z - 230V Three Phase
Q - 380V Three Phase
Y - 460V Three Phase

Other Options -
Contact Factory
M - 575V Three Phase
E - 220V 50HZ Single Phase
F - 220V 50HZ Three Phase
H - 380V 50HZ Three Phase
N - 415V 50HZ Three Phase

Model 21050K3A is a 1/2 HP, three wire, 115 volt, single phase no-lead brass 4" submersible pump, designed to pump in the 10 GPM range.

NOTES

- **Standard is 230V, Single Phase, 60 HZ (no suffix letter required)**
- **Three-Wire single phase models include** pump, motor, 48” leads, control box and check valve.
- **Two-Wire single phase models include** pump, motor, 48” leads, and check valve.
- **Three-Wire three phase models include** pump, motor, 48” leads, contactor, and check valve.
- All submersible pumps include **grounded leads.**

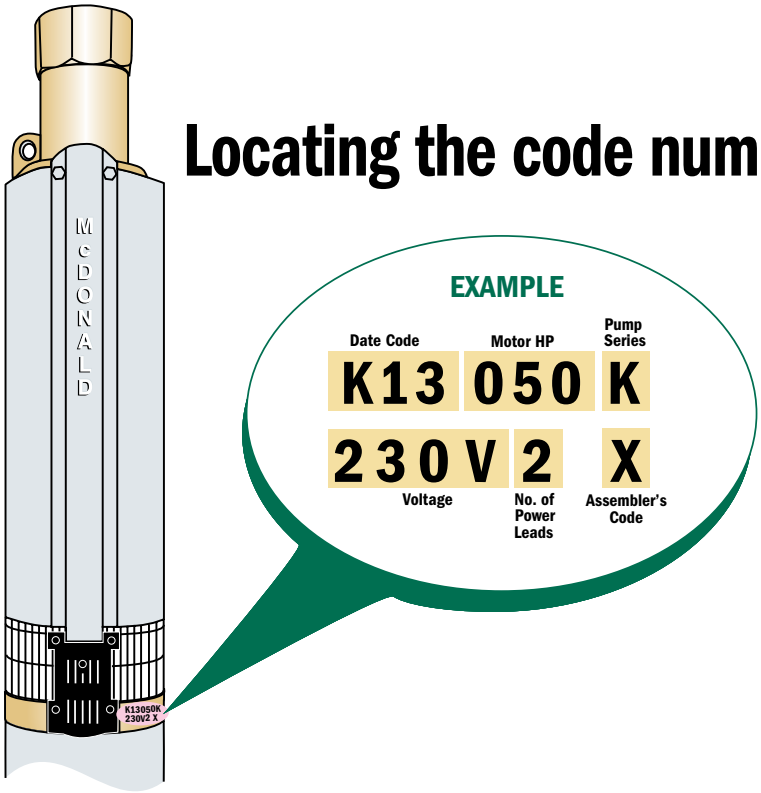

Locating the code number on the pump

A code is stamped on each A.Y. McDonald submersible pump. Contained in this code is the following information:

- Date of manufacture
- Motor HP
- Pump Series
- Voltage
- Number of power leads
- Assembler’s code

J Series - 5 GPM

A.Y. McDonald offers a full line of no-lead brass submersible pumps built for years of trouble free operation, with high-efficiency impellers and diffusers. These submersibles offer peak capacity performance in 5, 7, 10, 15, 20, and 25 gallons per minute (GPM). Other features include no-lead discharge head with a built-in check valve, and stainless steel shaft and coupling.

All J Series No-Lead Pumps come with a 1 1/4" discharge and sizes range from 1/3 to 1 1/2 horse power (HP). Two or three wire models up to 1 1/2 horse power (HP).

Models Available

Two Wire Single Phase

Model No.	HP	Stages	Volt	A	B	Wt.
21030J2A*	1/3	9	115	13.48"	9.53"	26
21030J2*	1/3	9	230	13.48"	9.53"	26
21050J2A	1/2	13	115	16.68"	9.53"	30
21050J2	1/2	13	230	16.68"	9.53"	30
21075J2	3/4	18	230	20.67"	10.66"	36
21100J2	1	23	230	25.93"	11.75"	41
21150J2	1 1/2	30	230	31.45"	15.12"	49

Three Wire** Single Phase

Model No.	HP	Stages	Volt	A	B	Wt.
21030J3A*	1/3	9	115	13.48"	9.53"	26
21030J3*	1/3	9	230	13.48"	9.53"	26
21050J3A	1/2	13	115	16.68"	9.53"	30
21050J3	1/2	13	230	16.68"	9.53"	30
21075J3	3/4	18	230	20.67"	10.66"	36
21100J3	1	23	230	25.93"	11.75"	41
21150J3	1 1/2	30	230	31.45"	13.28"	41

Three Wire** Three Phase

Model No.	HP	Stages	Volt	A	B	Wt.
21150J3Z	1 1/2	30	230	31.45"	11.75"	45
21150J3Y	1 1/2	30	460	31.45"	11.75"	45

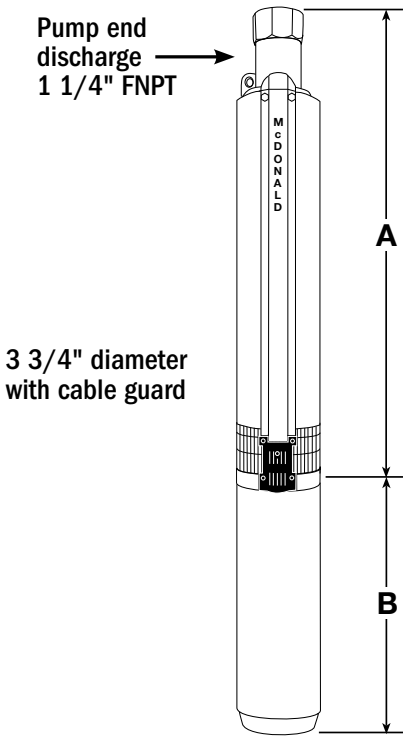

*All one-third horsepower pumps are furnished with one-half horsepower motors (and control boxes where applicable).
**All three wire pumps are available in three phase by selecting pump end and appropriate motor and contactor (see pages 18-22).

Output - in Gallons Per Minute (Depth to Water)

	PSI	25'	50'	75'	100'	125'	150'	175'	200'	225'
1/3 HP	0	11.7	10.6	9.5	8.4	7.3	6.1	4.8	3.4	1.8
	30	8.6	7.5	6.4	5.1	3.8	2.2			
	40	7.6	6.4	5.2	3.9	2.3				
	50	6.5	5.3	4.0	2.5					

	PSI	25'	50'	75'	100'	125'	150'	175'	200'	225'	250'	275'	300'	325'
1/2 HP	0	11.9	11.2	10.5	9.8	9.1	8.4	7.6	6.8	6.0	5.0	4.1	3.0	1.8
	30	10.0	9.2	8.5	7.8	7.0	6.1	5.3	4.3	3.2	2.1			
	40	9.3	8.6	7.8	7.0	6.2	5.3	4.4	3.3	2.2				
	50	8.6	7.9	7.1	6.3	5.4	4.4	3.4	2.3					
	60	7.9	7.2	6.3	5.5	4.5	3.5	2.3						

	PSI	25'	50'	75'	100'	125'	150'	175'	200'	225'	250'	275'	300'	325'	350'	375'	400'	425'	450'
3/4 HP	0	12.2	11.7	11.2	10.7	10.2	9.7	9.2	8.7	8.1	7.6	7.1	6.5	5.9	5.3	4.7	4.0	3.3	2.6
	30	10.8	10.3	9.8	9.3	8.8	8.3	7.7	7.2	6.6	6.1	5.5	4.9	4.2	3.5	2.7	1.9		
	40	10.3	9.8	9.3	8.8	8.3	7.8	7.2	6.7	6.1	5.5	4.9	4.3	3.6	2.8	2.0			
	50	9.9	9.4	8.9	8.3	7.8	7.3	6.7	6.2	5.6	4.9	4.3	3.6	2.9	2.0				
	60	9.4	8.9	8.4	7.9	7.3	6.8	6.2	5.6	5.0	4.4	3.7	2.9	2.1					

FRICTION LOSSES IN RISER PIPE HAVE NOT BEEN CALCULATED

J Series - 5 GPM

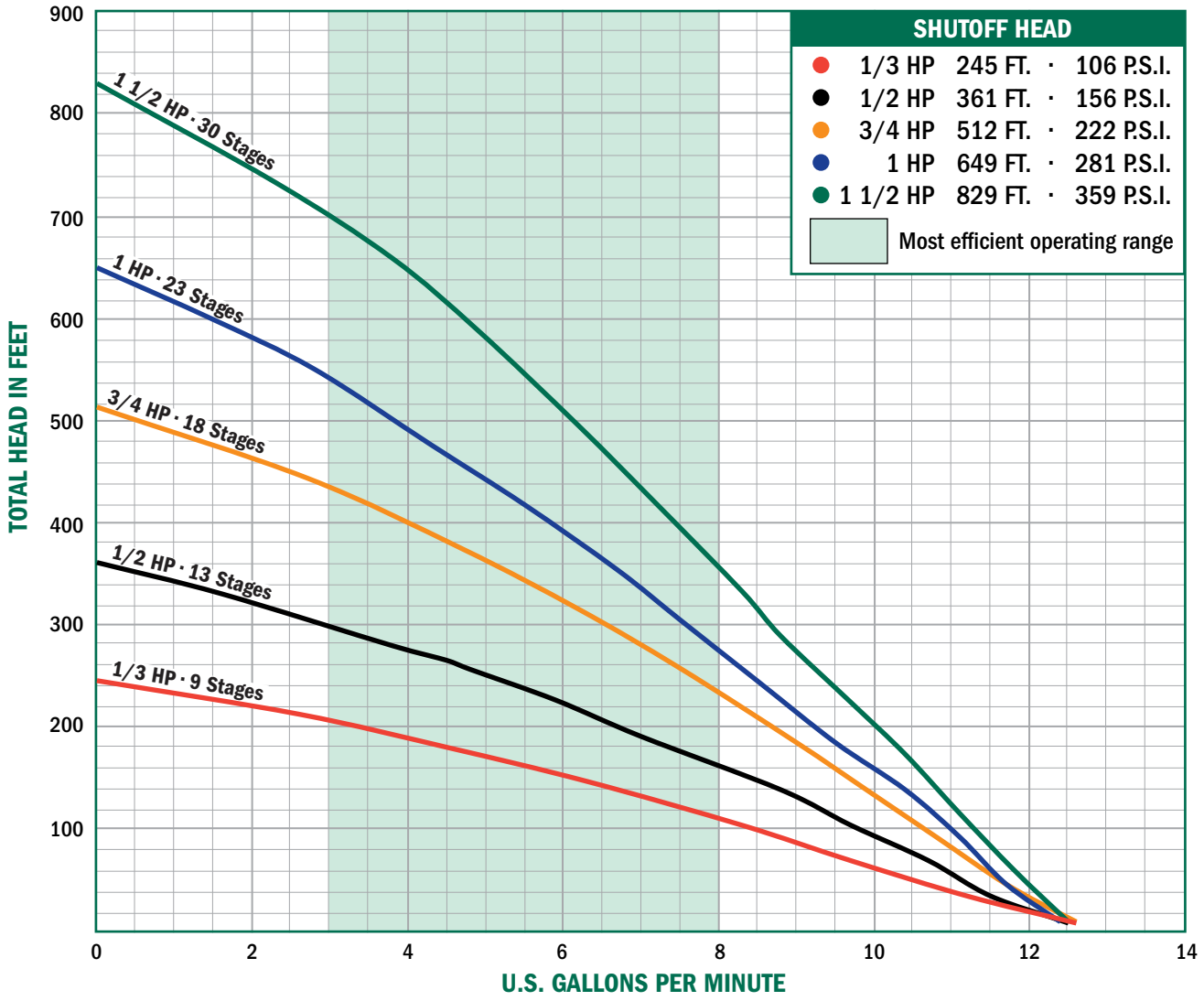

	PSI	50'	100'	150'	200'	250'	300'	350'	400'	450'	500'	550'	600'
1 HP	0	11.7	10.9	10.1	9.3	8.4	7.6	6.7	5.8	4.9	3.9	2.7	1.5
	30	10.6	9.8	9.0	8.1	7.3	6.4	5.5	4.5	3.4	2.3		
	40	10.2	9.4	8.6	7.7	6.9	6.0	5.0	4.0	2.9	1.7		
	50	9.9	9.0	8.2	7.3	6.4	5.5	4.6	3.5	2.4			
	60	9.5	8.6	7.8	6.9	6.0	5.1	4.1	3.0	1.8			

	PSI	50'	100'	150'	200'	250'	300'	350'	400'	450'	500'	550'	600'	650'
1½ HP	0	15.9	15.1	14.3	13.4	12.4	11.4	10.4	9.2	7.9	6.5	5.0	3.4	1.6
	30	14.8	13.9	13.0	12.1	11.0	9.9	8.7	7.4	5.9	4.4	2.7		
	40	14.4	13.5	12.6	11.6	10.5	9.4	8.1	6.7	5.2	3.6	1.9		
	50	14.0	13.1	12.1	11.1	10.0	8.8	7.5	6.0	4.5	2.8			
	60	13.6	12.7	11.7	10.6	9.5	8.2	6.8	5.3	3.7	2.0			

FRICTION LOSSES IN RISER PIPE HAVE NOT BEEN CALCULATED

V Series - 7 GPM

A.Y. McDonald offers a full line of no-lead brass submersible pumps built for years of trouble free operation, with high-efficiency impellers and diffusers. These submersibles offer peak capacity performance in 5, 7, 10, 15, 20, and 25 gallons per minute (GPM). Other features include no-lead discharge head with a built-in check valve, and stainless steel shaft and coupling.

All V Series No-Lead Pumps come with a 1 1/4" discharge and sizes range from 1/3 to 2 horse power (HP). Two wire models up to 1 1/2 horse power (HP) or three wire models up to 2 horse power (HP).

Models Available

Two Wire Single Phase

Model No.	HP	Stages	Volt	A	B	Wt.
21030V2A*	1/3	6	115	11.1"	9.53"	24
21030V2*	1/3	6	230	11.1"	9.53"	25
21050V2A	1/2	9	115	13.48"	9.53"	26
21050V2	1/2	9	230	13.48"	9.53"	26
21075V2	3/4	12	230	15.92"	10.66"	31
21100V2	1	16	230	19.11"	11.75"	34
21150V2	1 1/2	21	230	23.58"	15.12"	46

Three Wire** Single Phase

Model No.	HP	Stages	Volt	A	B	Wt.
21030V3A*	1/3	6	115	11.1"	9.53"	25
21030V3*	1/3	6	230	11.1"	9.53"	25
21050V3A	1/2	9	115	13.48"	9.53"	26
21050V3	1/2	9	230	13.48"	9.53"	26
21075V3	3/4	12	230	15.92"	10.66"	30
21100V3	1	16	230	19.11"	11.75"	35
21150V3	1 1/2	21	230	23.58"	13.62"	41
21200V3	2	26	230	28.34"	15.12"	49

Three Wire** Three Phase

Model No.	HP	Stages	Volt	A	B	Wt.
21150V3Z	1 1/2	21	230	23.58"	15.82"	41
21150V3Y	1 1/2	21	460	23.58"	15.82"	41
21200V3Z	2	26	230	28.34"	17.69"	49
21200V3Y	2	26	460	28.34"	17.69"	49

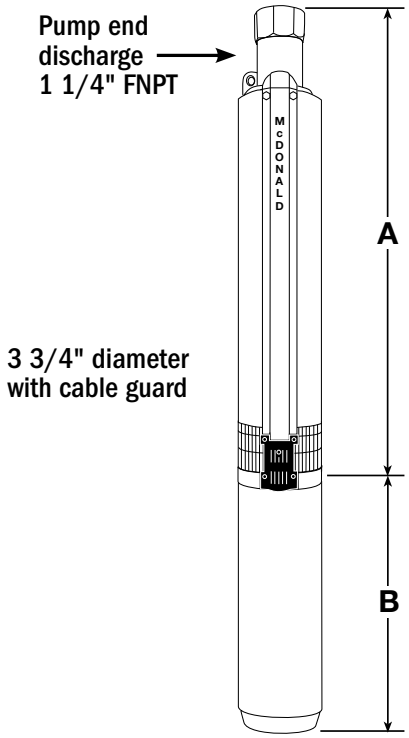

*All one-third horsepower pumps are furnished with one-half horsepower motors (and control boxes where applicable).
**All three wire pumps are available in three phase by selecting pump end and appropriate motor and contactor (see pages 18-22).

Output - in Gallons Per Minute (Depth to Water)

	PSI	25'	50'	75'	100'	125'	150'	175'
1/3 HP	0	15.1	13.7	12.2	10.5	8.6	6.4	3.8
	30	10.9	9.0	6.9	4.4	1.3		
	40	9.2	7.1	4.6	1.6			
	50	7.2	4.8	1.9				

	PSI	25'	50'	75'	100'	125'	150'	175'	200'	225'	250'	275'
1/2 HP	0	15.6	14.6	13.6	12.6	11.5	10.4	9.2	7.8	6.3	4.5	2.5
	30	12.8	11.8	10.7	9.5	8.2	6.7	5.0	3.0			
	40	11.9	10.8	9.6	8.3	6.8	5.1	3.1				
	50	10.9	9.7	8.4	6.9	5.2	3.3					
	60	9.8	8.5	7.0	5.4	3.4	1.3					

	PSI	25'	50'	75'	100'	125'	150'	175'	200'	225'	250'	275'	300'	325'	350'	375'
3/4 HP	0	16.1	15.5	14.8	14.0	13.3	12.5	11.6	10.8	9.9	8.9	7.8	6.7	5.5	4.2	2.8
	30	14.2	13.4	12.7	11.8	11.0	10.1	9.1	8.1	7.0	5.8	4.5	3.1	1.5		
	40	13.5	12.7	11.9	11.0	10.1	9.2	8.2	7.1	5.9	4.6	3.2	1.7			
	50	12.8	12.0	11.1	10.2	9.3	8.2	7.2	6.0	4.7	3.3	1.8				
	60	12.0	11.2	10.3	9.3	8.3	7.2	6.1	4.8	3.4	1.9					

FRICTION LOSSES IN RISER PIPE HAVE NOT BEEN CALCULATED

V Series - 7 GPM

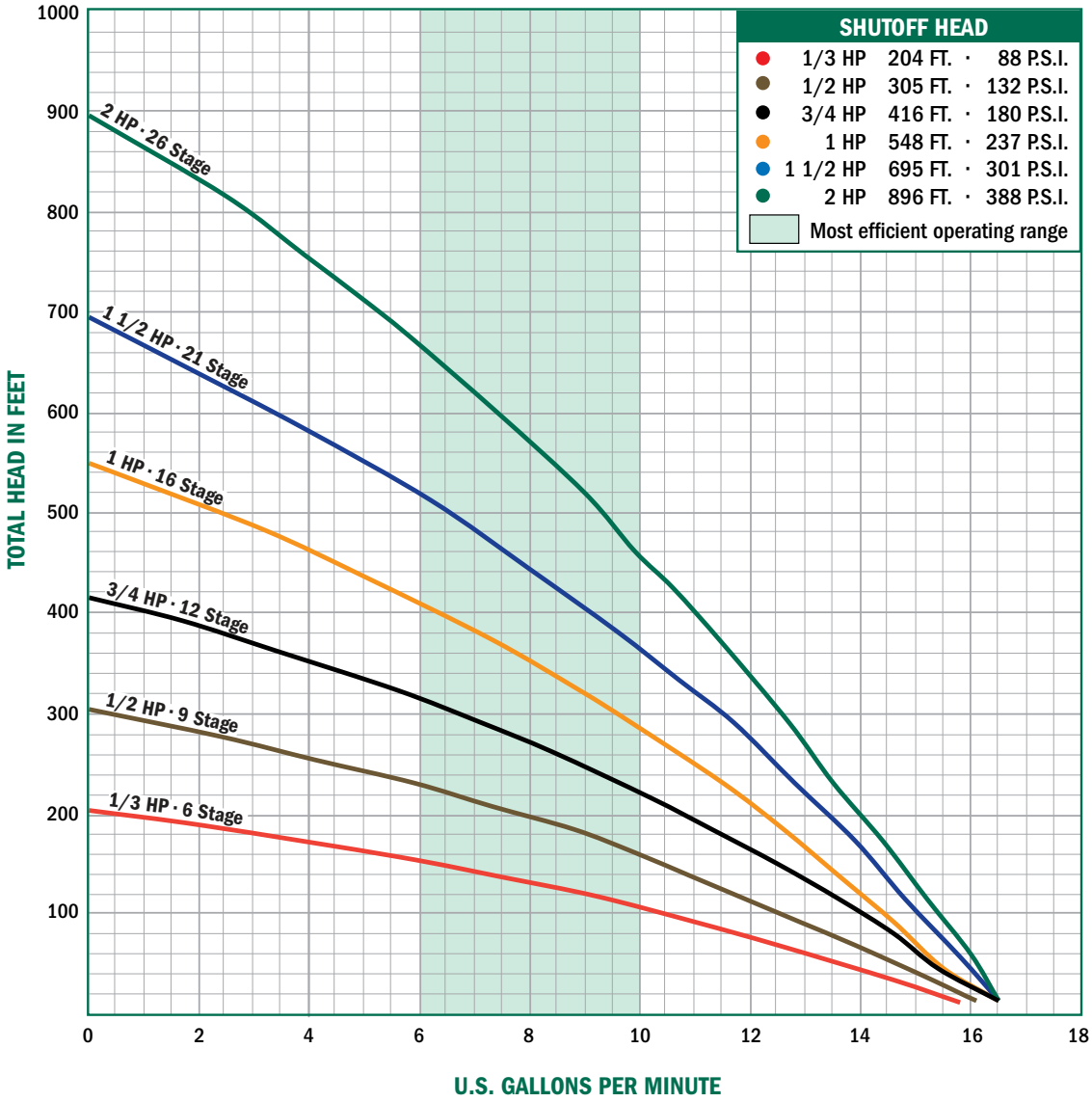

1 HP

PSI	25'	50'	75'	100'	125'	150'	175'	200'	225'	250'	275'	300'	325'	350'	375'	400'	425'	450'	475'
0	16.1	15.5	15.0	14.4	13.9	13.3	12.8	12.2	11.6	11.0	10.3	9.6	8.9	8.1	7.2	6.3	5.4	4.5	3.5
30	14.5	14.0	13.5	12.9	12.3	11.8	11.1	10.5	9.8	9.1	8.3	7.4	6.6	5.6	4.7	3.7	2.7		
40	14.0	13.5	12.9	12.4	11.8	11.2	10.5	9.9	9.1	8.3	7.5	6.6	5.7	4.7	3.8	2.8			
50	13.5	13.0	12.4	11.8	11.2	10.6	9.9	9.2	8.4	7.6	6.7	5.8	4.8	3.8	2.8				
60	13.0	12.5	11.9	11.3	10.6	10.0	9.2	8.5	7.6	6.8	5.8	4.9	3.9	2.9	1.9				

1½ HP

PSI	50'	100'	150'	200'	250'	300'	350'	400'	450'	500'	550'	600'	650'
0	15.9	15.1	14.3	13.4	12.4	11.4	10.4	9.2	7.9	6.5	5.0	3.4	1.6
30	14.8	13.9	13.0	12.1	11.0	9.9	8.7	7.4	5.9	4.4	2.7		
40	14.4	13.5	12.6	11.6	10.5	9.4	8.1	6.7	5.2	3.6	1.9		
50	14.0	13.1	12.1	11.1	10.0	8.8	7.5	6.0	4.5	2.8			
60	13.6	12.7	11.7	10.6	9.5	8.2	6.8	5.3	3.7	2.0			

2 HP

PSI	50'	100'	150'	200'	250'	300'	350'	400'	450'	500'	550'	600'	650'	700'	750'	800'	850'
0	16.1	15.4	14.7	14.0	13.3	12.6	11.8	11.0	10.2	9.3	8.4	7.4	6.4	5.3	4.1	2.9	1.5
30	15.1	14.5	13.8	13.0	12.3	11.5	10.7	9.8	8.9	8.0	7.0	6.0	4.9	3.7	2.3		
40	14.8	14.1	13.4	12.7	11.9	11.1	10.3	9.4	8.5	7.6	6.5	5.5	4.3	3.1	1.7		
50	14.5	13.8	13.1	12.3	11.5	10.7	9.9	9.0	8.1	7.1	6.1	4.9	3.8	2.4			
60	14.2	13.5	12.7	12.0	11.2	10.3	9.5	8.6	7.6	6.6	5.6	4.4	3.2	1.8			

FRICTION LOSSES IN RISER PIPE HAVE NOT BEEN CALCULATED

K Series - 10 GPM

A.Y. McDonald offers a full line of no-lead brass submersible pumps built for years of trouble free operation, with high-efficiency impellers and diffusers. These submersibles offer peak capacity performance in 5, 7, 10, 15, 20, and 25 gallons per minute (GPM). Other features include no-lead discharge head with a built-in check valve, and stainless steel shaft and coupling.

All K Series No-Lead Pumps come with a 1 1/4" discharge and sizes range from 1/3 to 5 horse power (HP). Two wire models up to 1 1/2 horse power (HP) or three wire models up to 5 horse power (HP).

Models Available

Two Wire Single Phase

Model No.	HP	Stages	Volt	A	B	Wt.
21030K2A*	1/3	5	115	12.01"	9.53"	19
21030K2*	1/3	5	230	12.01"	9.53"	19
21050K2A	1/2	7	115	13.65"	9.53"	19
21050K2	1/2	7	230	13.65"	9.53"	27
21075K2	3/4	9	230	15.34"	10.66"	29
21100K2	1	12	230	17.89"	11.75"	32
21150K2	1 1/2	16	230	22.55"	15.12"	42

Three Wire** Single Phase

Model No.	HP	Stages	Volt	A	B	Wt.
21030K3A*	1/3	5	115	12.01"	9.53"	19
21030K3*	1/3	5	230	12.01"	9.53"	19
21050K3A	1/2	7	115	13.65"	9.53"	19
21050K3	1/2	7	230	13.65"	9.53"	19
21075K3	3/4	9	230	15.34"	10.66"	29
21100K3	1	12	230	17.89"	11.75"	33
21150K3	1 1/2	16	230	22.55"	13.62"	38
21200K3	2	20	230	25.95"	15.12"	46
21300K3	3	26	230	31.06"	19.06"	70
21500K3	5	33	230	36.99"	29.62"	91

Three Wire** Three Phase

Model No.	HP	Stages	Volt	A	B	Wt.
21150K3Z	1 1/2	16	230	22.55"	11.75"	35
21150K3Y	1 1/2	16	460	22.55"	11.75"	35
21200K3Z	2	20	230	25.98"	13.62"	43
21200K3Y	2	20	460	25.98"	13.62"	43
21300K3Z	3	26	230	31.06"	16.04"	60
21300K3Y	3	26	460	31.06"	16.04"	60
21500K3Z	5	33	230	36.99"	29.62"	76
21500K3Y	5	33	460	36.99"	23.62"	76

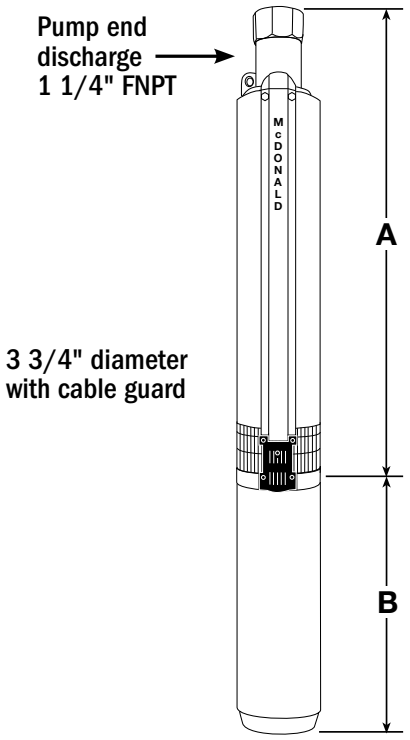

*All one-third horsepower pumps are furnished with one-half horsepower motors (and control boxes where applicable).
**All three wire pumps are available in three phase by selecting pump end and appropriate motor and contactor (see pages 18-22).

Output - in Gallons Per Minute (Depth to Water)

	PSI	25'	50'	75'	100'	125'	150'	175'
1/3 HP	0	18.78	16.62	14.27	11.68	8.75	5.31	0.93
	30	12.29	9.45	6.16	2.06			
	40	9.68	6.43	2.42				
	50	6.70	2.76					
	60	3.10						

	PSI	25'	50'	75'	100'	125'	150'	175'	200'	225'	250'
1/2 HP	0	19.90	18.49	16.99	15.40	13.69	11.84	9.79	7.49	4.78	1.32
	30	15.77	14.09	12.27	10.28	8.04	5.44	2.21			
	40	14.22	12.42	10.44	8.22	5.66	2.49				
	50	12.56	10.60	8.40	5.87	2.76					
	60	10.75	8.58	6.08	3.03						

	PSI	25'	50'	75'	100'	125'	150'	175'	200'	225'	250'	275'	300'	325'
3/4 HP	0	20.36	19.26	18.12	16.93	15.67	14.35	12.95	11.45	9.83	8.05	6.06	3.75	0.89
	30	17.20	15.97	14.66	13.28	11.80	10.21	8.47	6.54	4.31	1.61			
	40	16.06	14.76	13.39	11.92	10.34	8.61	6.69	4.49	1.84				
	50	14.86	13.49	12.03	10.46	8.75	6.85	4.67	2.07					
	60	13.60	12.15	10.59	8.89	7.00	4.85	2.29						

FRICTION LOSSES IN RISER PIPE HAVE NOT BEEN CALCULATED

	PSI	25'	50'	75'	100'	125'	150'	175'	200'	225'	250'	275'	300'	325'	350'	375'	400'	425'
1 HP	0	20.86	20.05	19.22	18.36	17.47	16.55	15.60	14.61	13.57	12.48	11.33	10.10	8.79	7.37	5.81	4.06	2.00
	30	18.56	17.68	16.77	15.82	14.84	13.81	12.73	11.59	10.39	9.10	7.71	6.18	4.48	2.51	0.09		
	40	17.75	16.84	15.89	14.91	13.89	12.81	11.68	10.48	9.20	7.82	6.30	4.61	2.67	0.29			
	50	16.91	15.97	14.99	13.97	12.90	11.77	10.58	9.30	7.93	6.42	4.75	2.83	0.50				
	60	16.04	15.06	14.05	12.98	11.86	10.67	9.40	8.04	6.54	4.89	2.99	0.70					

K Series - 10 GPM

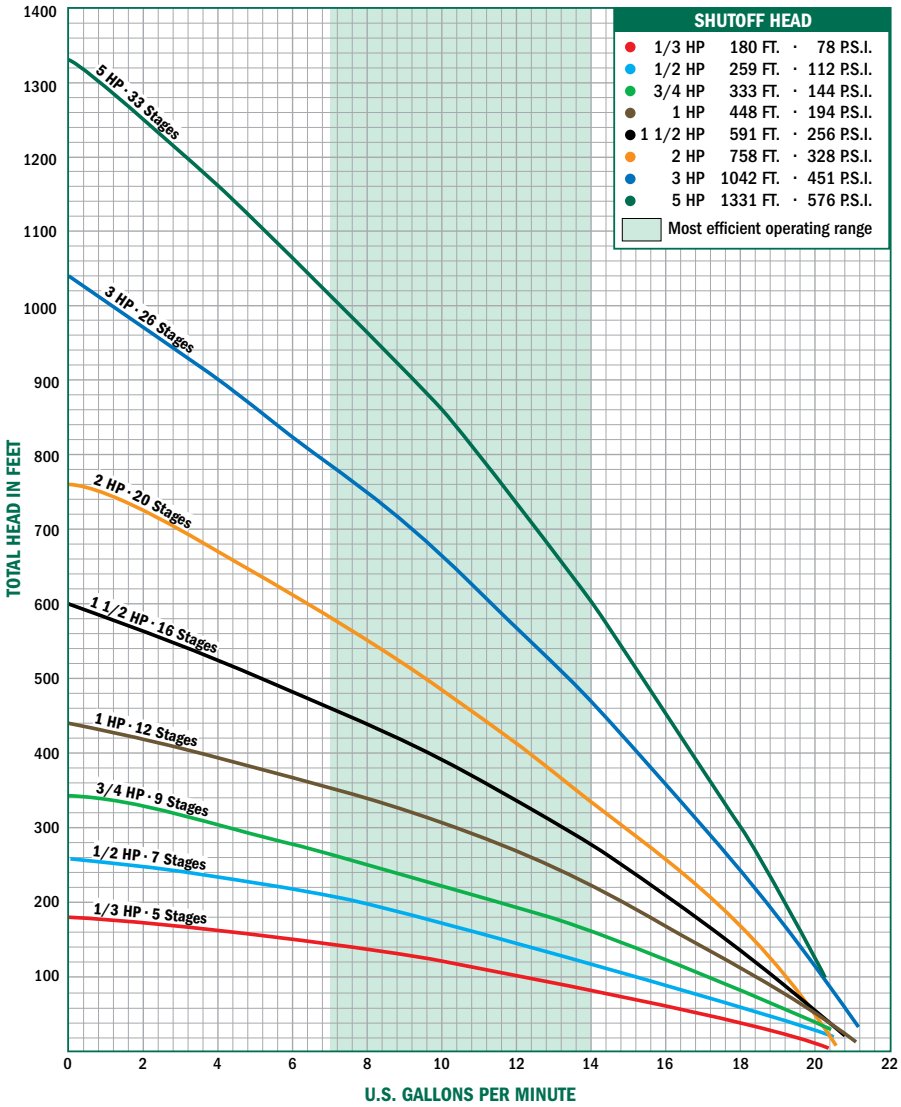

Output - in Gallons Per Minute (Depth to Water) - Continued

1½ HP

PSI	50'	100'	150'	200'	250'	300'	350'	400'	450'	500'	550'
0	20.18	18.95	17.66	16.31	14.87	13.34	11.69	9.89	7.88	5.58	2.80
30	18.46	17.15	15.76	14.29	12.72	11.01	9.14	7.03	4.58	1.51	
40	17.86	16.52	15.09	13.58	11.95	10.17	8.20	5.95	3.27		
50	17.25	15.87	14.41	12.84	11.15	9.29	7.20	4.78	1.78		
60	16.62	15.21	13.70	12.08	10.31	8.36	6.14	3.49	0.02		

2 HP

PSI	50'	100'	150'	200'	250'	300'	350'	400'	450'	500'	550'	600'	650'	700'	750'
0	19.85	18.89	17.89	16.85	15.78	14.66	13.49	12.26	10.96	9.59	8.11	6.51	4.75	2.77	0.46
30	18.51	17.49	16.44	15.35	14.21	13.02	11.77	10.44	9.03	7.51	5.85	4.02	1.93		
40	18.04	17.01	15.94	14.83	13.67	12.45	11.17	9.80	8.34	6.76	5.03	3.09	0.84		
50	17.57	16.52	15.44	14.30	13.11	11.87	10.55	9.14	7.63	5.98	4.16	2.10			
60	17.09	16.03	14.92	13.76	12.55	11.27	9.91	8.46	6.89	5.17	3.25	1.02			

FRICTION LOSSES IN RISER PIPE HAVE NOT BEEN CALCULATED

3 HP

PSI	50'	100'	150'	200'	250'	300'	350'	400'	450'	500'	550'	600'	650'	700'	750'	800'	850'	900'	950'	1000'
0	21.05	20.27	19.48	18.67	17.84	16.99	16.11	15.22	14.30	13.35	12.36	11.35	10.30	9.20	8.05	6.85	5.59	4.24	2.81	1.26
30	19.97	19.17	18.35	17.51	16.65	15.77	14.87	13.93	12.97	11.98	10.95	9.88	8.76	7.60	6.37	5.08	3.70	2.23	0.62	
40	19.60	18.79	17.96	17.12	16.25	15.36	14.44	13.49	12.52	11.51	10.46	9.37	8.23	7.04	5.78	4.45	3.03	1.50		
50	19.23	18.41	17.58	16.72	15.84	14.94	14.01	13.05	12.05	11.03	9.96	8.85	7.69	6.47	5.18	3.81	2.34	0.75		
60	18.85	18.03	17.18	16.32	15.43	14.51	13.57	12.59	11.58	10.54	9.45	8.32	7.13	5.88	4.56	3.14	1.62			

5 HP

PSI	50'	100'	150'	200'	250'	300'	350'	400'	450'	500'	550'	600'	650'	700'	750'	800'	850'	900'	950'	1000'	1050'	1100'	1150'	1200'	1250'	1300'
0	20.96	20.39	19.81	19.22	18.62	18.01	17.38	16.74	16.09	15.42	14.74	14.04	13.32	12.58	11.82	11.04	10.22	9.38	8.51	7.60	6.64	5.64	4.58	3.45	2.24	0.93
30	20.17	19.59	18.99	18.39	17.77	17.14	16.49	15.84	15.16	14.47	13.77	13.04	12.29	11.52	10.73	9.90	9.05	8.16	7.23	6.26	5.24	4.15	3.00	1.75	0.39	
40	19.90	19.31	18.71	18.10	17.48	16.84	16.19	15.53	14.85	14.15	13.43	12.70	11.94	11.16	10.35	9.51	8.64	7.74	6.79	5.80	4.75	3.63	2.43	1.14		
50	19.63	19.04	18.43	17.82	17.19	16.54	15.89	15.21	14.53	13.82	13.09	12.35	11.58	10.79	9.97	9.11	8.23	7.31	6.34	5.32	4.24	3.09	1.85	0.50		
60	19.36	18.76	18.15	17.53	16.89	16.24	15.58	14.90	14.20	13.49	12.75	12.00	11.22	10.41	9.58	8.71	7.81	6.86	5.87	4.83	3.72	2.53	1.24			

L Series - 15 GPM

A.Y. McDonald offers a full line of no-lead brass submersible pumps built for years of trouble free operation, with high-efficiency impellers and diffusers. These submersibles offer peak capacity performance in 5, 7, 10, 15, 20, and 25 gallons per minute (GPM). Other features include no-lead discharge head with a built-in check valve, and stainless steel shaft and coupling.

All L Series No-Lead Pumps come with a 1 1/4" discharge and sizes range from 1/3 to 5 horse power (HP). Two wire models up to 1 1/2 horse power (HP) or three wire models up to 5 horse power (HP).

Models Available

Two Wire Single Phase

Model No.	HP	Stages	Volt	A	B	Wt.
21030L2A*	1/3	5	115	13.52"	9.53"	26
21030L2*	1/3	5	230	13.52"	9.53"	26
21050L2A	1/2	6	115	14.59"	9.53"	26
21050L2	1/2	6	230	14.59"	9.53"	26
21075L2	3/4	8	230	16.75"	10.66"	30
21100L2	1	10	230	18.89"	11.75"	34
21150L2	1 1/2	13	230	22.11"	15.12"	42

Three Wire** Single Phase

Model No.	HP	Stages	Volt	A	B	Wt.
21030L3A*	1/3	5	115	13.52"	9.53"	26
21030L3*	1/3	5	230	13.52"	9.53"	26
21050L3A	1/2	6	115	14.59"	9.53"	26
21050L3	1/2	6	230	14.59"	9.53"	26
21075L3	3/4	8	230	16.75"	10.66"	30
21100L3	1	10	230	18.89"	11.75"	34
21150L3	1 1/2	13	230	22.11"	13.62"	39
21200L3	2	17	230	26.41"	15.12"	46
21300L3	3	23	230	34.23"	19.06"	60
21500L3	5	35	230	47.10"	29.62"	87

Three Wire** Three Phase

Model No.	HP	Stages	Volt	A	B	Wt.
21150L3Z	1 1/2	13	230	22.11"	11.75"	36
21150L3Y	1 1/2	13	460	22.11"	11.75"	36
21200L3Z	2	17	230	26.41"	13.62"	43
21200L3Y	2	17	460	26.41"	13.62"	43
21300L3Z	3	23	230	34.23"	16.04"	53
21300L3Y	3	23	460	34.23"	16.04"	53
21500L3Z	5	35	230	47.10"	23.62"	74
21500L3Y	5	35	460	47.10"	23.62"	74

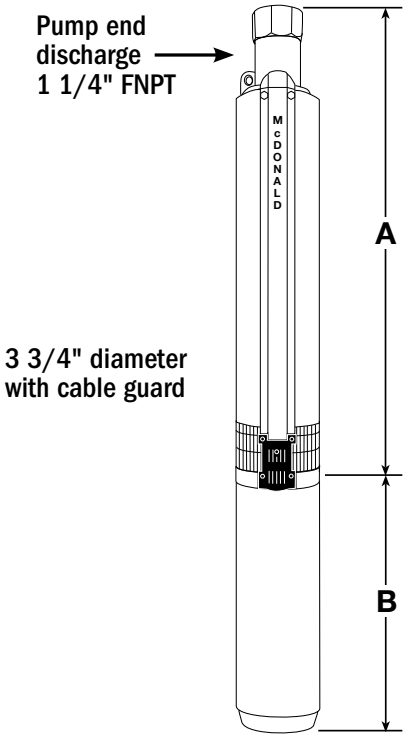

*All one-third horsepower pumps are furnished with one-half horsepower motors (and control boxes where applicable).
**All three wire pumps are available in three phase by selecting pump end and appropriate motor and contactor (see pages 18-22).

Output - in Gallons Per Minute (Depth to Water)

1/3 HP

PSI	25'	50'	75'	100'	125'
0	27.82	24.66	21.05	16.70	10.79
30	17.79	12.38			
40	12.86	2.69			
50	4.29				
60					

1/2 HP

PSI	25'	50'	75'	100'	125'	150'
0	28.28	25.58	22.58	19.18	15.14	9.84
30	20.00	16.14	11.23	2.99		
40	16.46	11.66	3.99			
50	12.08	4.85				
60	5.63					

3/4 HP

PSI	25'	50'	75'	100'	125'	150'	175'	200'	225'
0	28.58	26.69	24.66	22.46	20.05	17.33	14.17	10.21	4.08
30	22.98	20.62	17.98	14.94	11.22	5.91			
40	20.81	18.19	15.19	11.54	6.43				
50	18.40	15.44	11.85	6.92					
60	15.68	12.15	7.38						

1 HP

PSI	25'	50'	75'	100'	125'	150'	175'	200'	225'	250'	300'
0	28.92	27.42	25.84	24.16	22.37	20.44	18.33	15.97	13.26	9.96	5.33
30	24.55	22.79	20.89	18.83	16.53	13.92	10.78	6.60			
40	22.93	21.04	18.99	16.72	14.13	11.05	6.99				
50	21.19	19.15	16.90	14.34	11.31	7.36					
60	19.31	17.08	14.55	11.56	7.71	0.50					

FRICTION LOSSES IN RISER PIPE HAVE NOT BEEN CALCULATED

L Series - 15 GPM

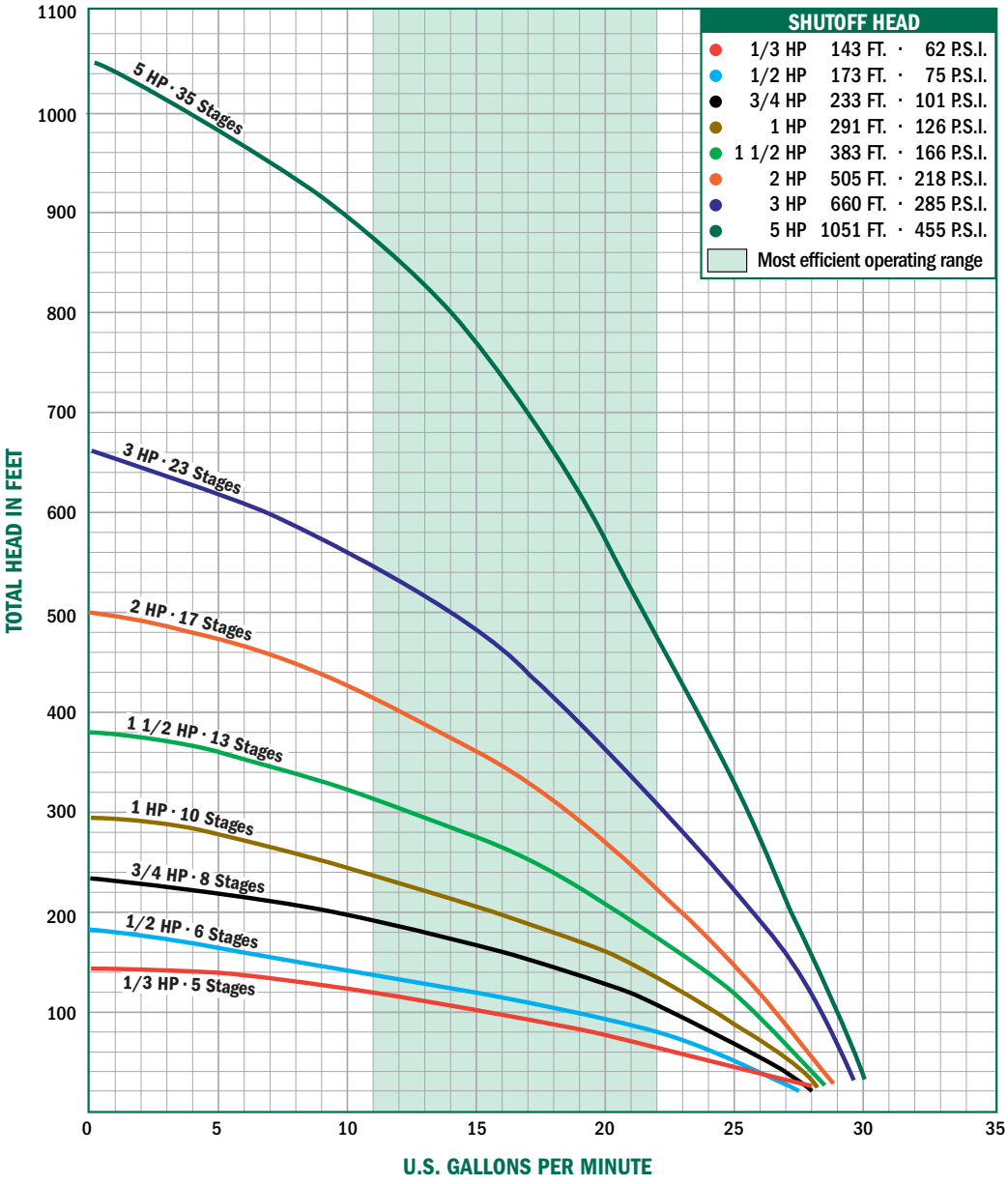

1½ HP

PSI	50'	100'	150'	200'	250'	300'	350'
0	28.02	25.72	23.20	20.39	17.15	13.20	7.62
30	24.78	22.16	19.20	15.74	11.35	4.06	
40	23.60	20.84	17.68	13.87	8.68		
50	22.37	19.44	16.03	11.73	4.93		
60	21.06	17.94	14.19	9.16			

2 HP

PSI	50'	100'	150'	200'	250'	300'	350'	400'	450'	500'
0	28.57	26.81	24.93	22.92	20.74	18.34	15.61	12.40	8.28	0.77
30	26.10	24.18	22.11	19.84	17.33	14.44	10.96	6.18		
40	25.23	23.24	21.09	18.72	16.05	12.93	9.00	2.66		
50	24.33	22.27	20.02	17.53	14.68	11.25	6.63			
60	23.40	21.26	18.91	16.27	13.19	9.34	3.38			

3 HP

PSI	50'	100'	150'	200'	250'	300'	350'	400'	450'	500'	550'	600'	650'
0	29.55	28.24	26.88	25.45	23.93	22.33	20.60	18.73	16.67	14.34	11.60	8.12	2.19
30	27.72	26.34	24.87	23.33	21.67	19.90	17.96	15.80	13.34	10.38	6.38		
40	27.09	25.67	24.17	22.58	20.87	19.02	16.99	14.71	12.05	8.72	3.56		
50	26.44	24.99	23.45	21.80	20.04	18.11	15.98	13.54	10.63	6.75			
60	25.78	24.29	22.70	21.01	19.17	17.16	14.90	12.27	9.01	4.12			

FRICTION LOSSES IN RISER PIPE HAVE NOT BEEN CALCULATED

5 HP

PSI	50'	100'	150'	200'	250'	300'	350'	400'	450'	500'	550'	600'	650'	700'	750'	800'	850'	900'	950'	1000'
0	29.70	28.91	28.10	27.27	26.42	25.54	24.62	23.68	22.69	21.67	20.59	19.47	18.27	17.00	15.63	14.14	12.49	10.61	8.38	5.43
30	28.60	27.79	26.95	26.08	25.19	24.26	23.30	22.30	21.26	20.17	19.01	17.79	16.48	15.07	13.53	11.80	9.80	7.36	3.85	
40	28.23	27.40	26.55	25.67	24.76	23.82	22.85	21.83	20.76	19.64	18.46	17.20	15.85	14.38	12.75	10.92	8.75	5.95	0.69	
50	27.85	27.01	26.15	25.26	24.33	23.38	22.38	21.34	20.25	19.10	17.89	16.59	15.18	13.65	11.94	9.97	7.57	4.20		
60	27.47	26.62	25.74	24.83	23.90	22.92	21.91	20.84	19.73	18.55	17.30	15.95	14.49	12.88	11.07	8.93	6.20	1.48		

P Series - 20 GPM

A.Y. McDonald offers a full line of no-lead brass submersible pumps built for years of trouble free operation, with high-efficiency impellers and diffusers. These submersibles offer peak capacity performance in 5, 7, 10, 15, 20, and 25 gallons per minute (GPM). Other features include no-lead discharge head with a built-in check valve, and stainless steel shaft and coupling.

All P Series No-Lead Pumps come with a 1 1/4" discharge and sizes range from 1/2 to 5 horse power (HP). Two wire models up to 1 1/2 horse power (HP) or three wire models up to 5 horse power (HP).

Models Available

Two Wire Single Phase

Model No.	HP	Stages	Volt	A	B	Wt.
21050P2A	1/2	5	115	13.52"	9.53"	26
21050P2	1/2	5	230	13.52"	9.53"	26
21075P2	3/4	7	230	15.67"	10.66"	30
21100P2	1	9	230	17.82"	11.75"	34
21150P2	1 1/2	12	230	21.04"	15.12"	44

Three Wire** Single Phase

Model No.	HP	Stages	Volt	A	B	Wt.
21050P3A	1/2	5	115	13.52"	9.53"	26
21050P3	1/2	5	230	13.52"	9.53"	26
21075P3	3/4	7	230	15.67"	10.66"	29
21100P3	1	9	230	17.82"	11.75"	34
21150P3	1 1/2	12	230	21.04"	13.62"	40
21200P3	2	14	230	23.19"	15.12"	45
21300P3	3	20	230	31.00"	19.06"	58
21500P3	5	32	230	43.88"	29.62"	86

Three Wire** Three Phase

Model No.	HP	Stages	Volt	A	B	Wt.
21150P3Z	1 1/2	12	230	21.04"	11.75"	37
21150P3Y	1 1/2	12	460	21.04"	11.75"	37
21200P3Z	2	14	230	23.19"	13.62"	42
21200P3Y	2	14	460	23.19"	13.62"	42
21300P3Z	3	20	230	31.00"	16.04"	51
21300P3Y	3	20	460	31.00"	16.04"	51
21500P3Z	5	32	230	43.88"	23.62"	74
21500P3Y	5	32	460	43.88"	23.62"	74

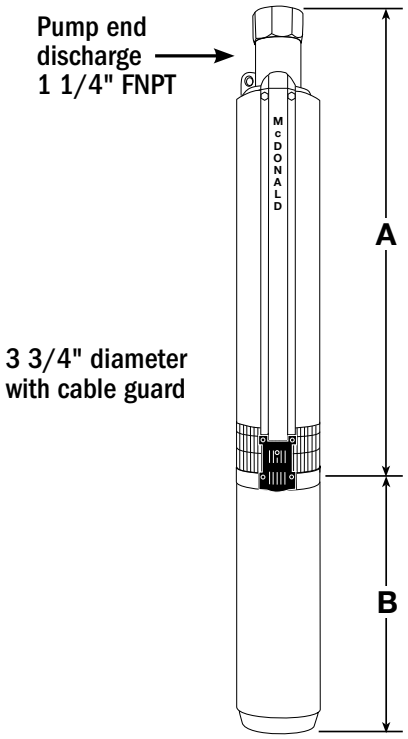

**All three wire pumps are available in three phase by selecting pump end and appropriate motor and contactor (see pages 18-22).

Output - in Gallons Per Minute (Depth to Water)

1/2 HP

PSI	25'	50'	75'	100'	125'
0	32.34	28.61	24.35	19.26	12.48
30	20.53	14.28	2.68		
40	14.83	4.36			
50	5.68				
60					

3/4 HP

PSI	25'	50'	75'	100'	125'	150'	175'	200'
0	32.36	29.82	27.06	24.01	20.58	16.54	11.39	2.53
30	24.74	21.40	17.53	12.71	5.44			
40	21.67	17.85	13.13	6.20				
50	18.16	13.54	6.91					
60	13.93	7.56						

1 HP

PSI	25'	50'	75'	100'	125'	150'	175'	200'	225'	250'
0	33.30	31.39	29.36	27.19	24.84	22.26	19.37	16.02	11.88	5.72
30	27.70	25.39	22.87	20.06	16.84	12.92	7.49			
40	25.57	23.07	20.29	17.10	13.26	8.01				
50	23.27	20.51	17.36	13.58	8.50					
60	20.73	17.62	13.90	8.97						

1½ HP

PSI	50'	100'	150'	200'	250'	300'	350'
0	32.95	29.95	26.64	22.90	18.50	12.88	3.03
30	28.71	25.26	21.30	16.53	10.04		
40	27.17	23.50	19.23	13.86	5.38		
50	25.53	21.62	16.93	10.65			
60	23.80	19.58	14.33	6.32			

FRICTION LOSSES IN RISER PIPE HAVE NOT BEEN CALCULATED

P Series - 20 GPM

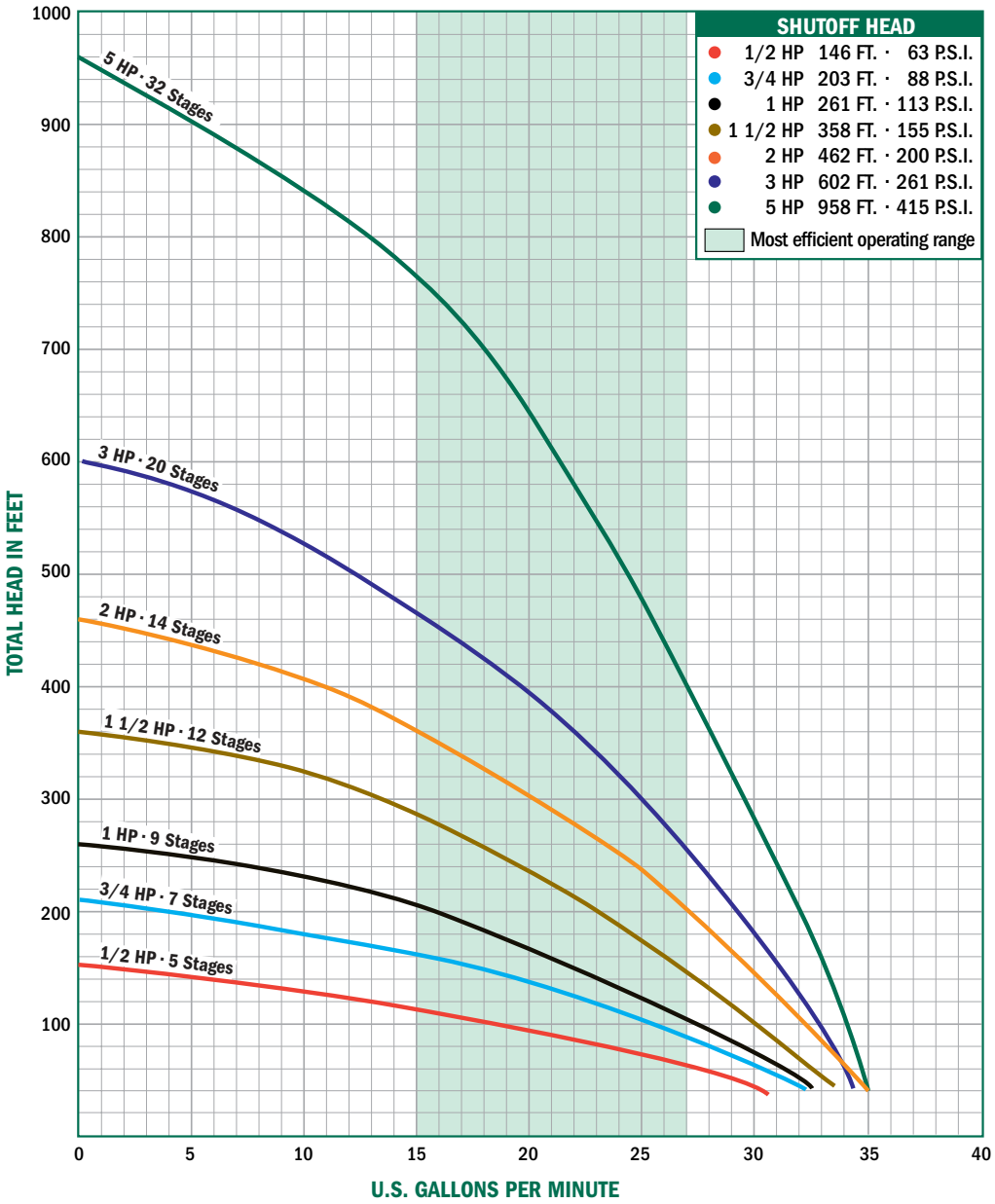

	PSI	50'	100'	150'	200'	250'	300'	350'	400'
2 HP	0	34.88	32.45	29.85	27.04	23.94	20.46	16.41	11.33
	30	31.47	28.79	25.88	22.65	18.98	14.61	8.85	
	40	30.26	27.48	24.43	21.02	17.07	12.20	5.06	
	50	29.00	26.11	22.91	19.28	14.97	9.38		
	60	27.70	24.68	21.30	17.40	12.62	5.79		

	PSI	50'	100'	150'	200'	250'	300'	350'	400'	450'	500'	550'
3 HP	0	34.31	32.64	30.88	29.03	27.05	24.92	22.61	20.06	17.16	13.72	9.23
	30	31.97	30.18	28.28	26.25	24.06	21.66	18.99	15.91	12.16	6.88	
	40	31.15	29.31	27.36	25.26	22.98	20.47	17.63	14.29	10.02	2.58	
	50	30.32	28.43	26.41	24.23	21.85	19.20	16.16	12.48	7.39		
	60	29.46	27.51	25.42	23.16	20.67	17.86	14.57	10.40	3.55		

FRICTION LOSSES IN RISER PIPE HAVE NOT BEEN CALCULATED

	PSI	50'	100'	150'	200'	250'	300'	350'	400'	450'	500'	550'	600'	650'	700'	750'	800'	850'	900'	950'
5 HP	0	35.14	34.10	33.04	31.94	30.80	29.62	28.40	27.12	25.79	24.38	22.90	21.32	19.62	17.78	15.74	13.43	10.69	7.15	.01
	30	33.70	32.62	31.50	30.35	29.16	27.91	26.61	25.25	23.82	22.30	20.68	18.93	17.02	14.88	12.43	9.46	5.32		
	40	33.20	32.11	30.98	29.80	28.59	27.32	25.99	24.60	23.13	21.56	19.89	18.07	16.06	13.80	11.15	7.77	2.10		
	50	32.70	31.59	30.44	29.25	28.01	26.71	25.36	23.93	22.42	20.80	19.07	17.17	15.06	12.64	9.81	5.71			
	60	32.19	31.06	29.89	28.68	27.42	26.10	24.71	23.24	21.69	20.02	18.21	16.22	13.98	11.37	8.07	2.79			

M Series - 25 GPM

A.Y. McDonald offers a full line of no-lead brass submersible pumps built for years of trouble free operation, with high-efficiency impellers and diffusers. These submersibles offer peak capacity performance in 5, 7, 10, 15, 20, and 25 gallons per minute (GPM). Other features include no-lead discharge head with a built-in check valve, and stainless steel shaft and coupling.

All M Series No-Lead Pumps come with a 1 1/4" discharge and sizes range from 1/2 to 5 horse power (HP). Two wire models up to 1 1/2 horse power (HP) or three wire models up to 5 horse power (HP).

Models Available

Two Wire Single Phase

Model No.	HP	Stages	Volt	A	B	Wt.
21050M2A	1/2	4	115	12.44"	9.53"	26
21050M2	1/2	4	230	12.44"	9.53"	26
21075M2	3/4	5	230	13.52"	10.66"	28
21100M2	1	7	230	15.67"	11.75"	33
21150M2	1 1/2	9	230	17.82"	15.12"	42

Three Wire** Single Phase

Model No.	HP	Stages	Volt	A	B	Wt.
21050M3A	1/2	4	115	12.44"	9.53"	26
21050M3	1/2	4	230	12.44"	9.53"	26
21075M3	3/4	5	230	13.52"	10.66"	28
21100M3	1	7	230	15.67"	11.75"	32
21150M3	1 1/2	9	230	17.82"	13.62"	38
21200M3	2	12	230	21.04"	15.12"	43
21300M3	3	16	230	25.33"	19.06"	55
21500M3	5	25	230	36.38"	29.62"	85

Three Wire** Three Phase

Model No.	HP	Stages	Volt	A	B	Wt.
21150M3Z	1 1/2	9	230	17.82"	11.75"	34
21150M3Y	1 1/2	9	460	17.82"	11.75"	35
21200M3Z	2	12	230	21.04"	13.62"	40
21200M3Y	2	12	460	21.04"	13.62"	40
21300M3Z	3	16	230	25.33"	16.04"	48
21300M3Y	3	16	460	25.33"	16.04"	48
21500M3Z	5	25	230	36.38"	23.62"	71
21500M3Y	5	25	460	36.38"	23.62"	71

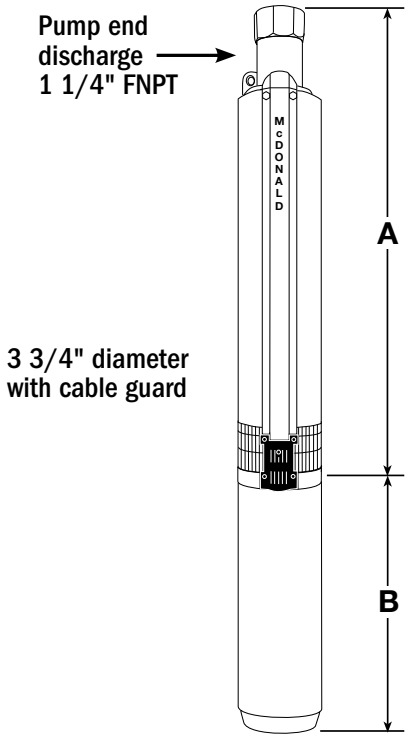

**All three wire pumps are available in three phase by selecting pump end and appropriate motor and contactor (see pages 18-22).

Output - in Gallons Per Minute (Depth to Water)

1/2 HP

PSI	25'	50'	75'	100'
0	34.97	29.23	22.43	13.64
30	15.93	2.93		
40	4.38			
50				

3/4 HP

PSI	25'	50'	75'	100'	125'	150'
0	36.08	31.97	27.33	21.88	14.91	2.74
30	23.22	16.71	6.80			
40	17.27	7.85				
50	8.81					

1 HP

PSI	25'	50'	75'	100'	125'	150'	175'	200'
0	38.23	35.39	32.34	29.02	25.34	21.13	16.10	9.38
30	29.81	26.22	22.15	17.35	11.16			
40	26.50	22.48	17.75	11.71	1.28			
50	22.80	18.14	12.24	2.61				
60	18.53		3.73					

1½ HP

PSI	25'	50'	75'	100'	125'	150'	175'	200'	225'	250'	275'
0	40.00	37.82	35.52	33.08	30.47	27.63	24.52	21.01	16.91	11.76	3.56
30	33.65	31.08	28.30	25.26	21.85	17.91	13.07	6.06			
40	31.28	28.52	25.50	22.13	18.24	13.49	6.76				
50	28.74	25.74	22.40	18.56	13.90	7.42					
60	25.98		18.87	14.29	8.04						

FRICTION LOSSES IN RISER PIPE HAVE NOT BEEN CALCULATED

M Series - 25 GPM

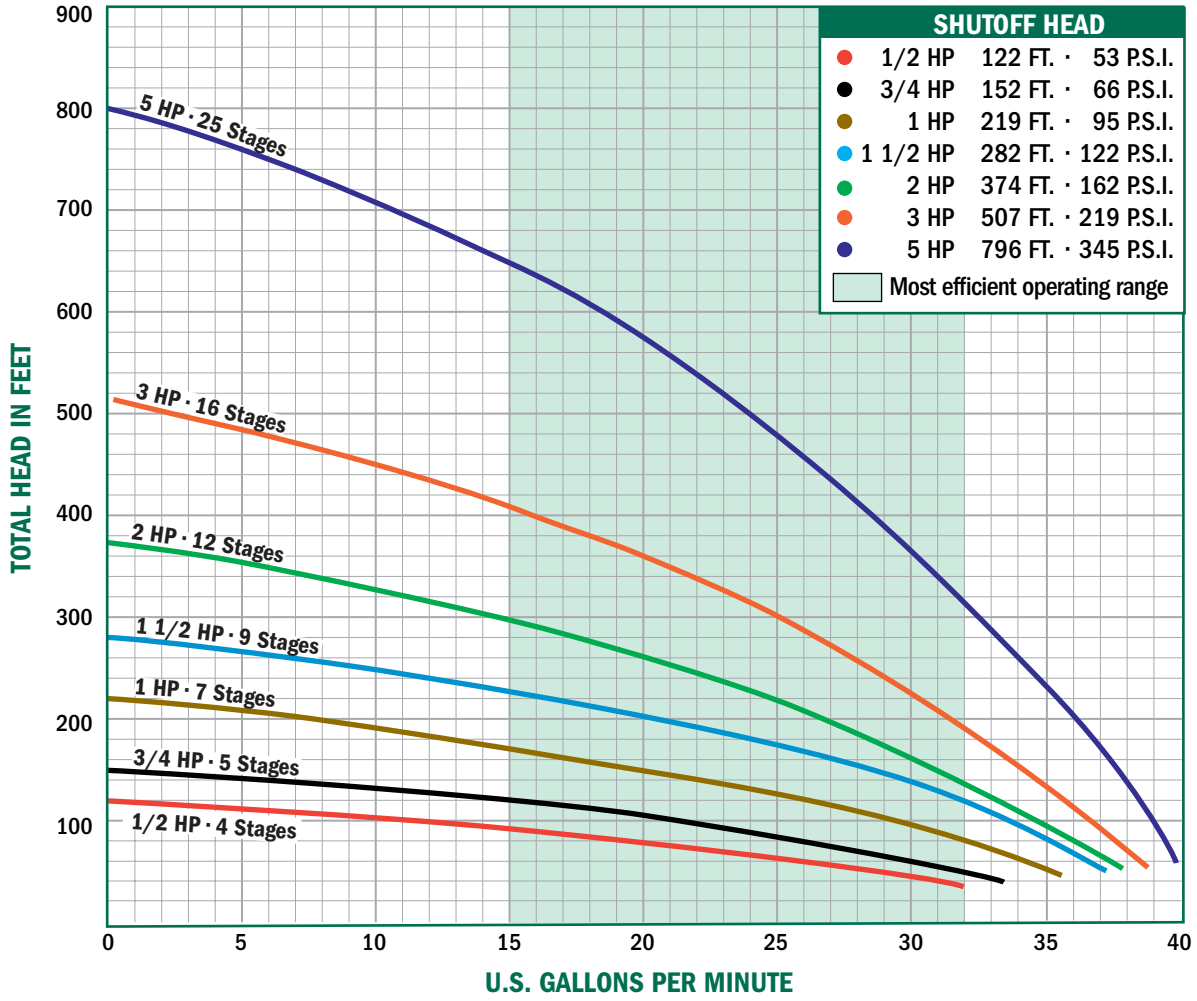

	PSI	50'	100'	150'	200'	250'	300'	350'
2 HP	0	38.07	34.66	30.92	26.74	21.91	15.98	7.38
	30	33.26	29.37	24.97	19.79	13.16	1.33	
	40	31.52	27.42	22.70	16.98	9.04		
	50	29.68	25.33	20.23	13.75	2.92		
	60	27.75	23.09	17.47	9.80			

	PSI	50'	100'	150'	200'	250'	300'	350'	400'	450'	500'
3 HP	0	39.30	36.84	34.22	31.42	28.38	25.02	21.23	16.75	11.09	1.27
	30	35.85	33.16	30.28	27.12	23.62	19.61	14.78	8.24		
	40	34.63	31.86	28.86	25.55	21.84	17.51	12.08	3.58		
	50	33.38	30.50	27.37	23.90	19.94	15.19	8.85			
	60	32.08	29.09	25.82	22.14	17.87	12.56	4.51			

FRICTION LOSSES IN RISER PIPE HAVE NOT BEEN CALCULATED

	PSI	50'	100'	150'	200'	250'	300'	350'	400'	450'	500'	550'	600'	650'	700'	750'
5 HP	0	40.4	38.9	37.4	35.8	34.1	32.4	30.6	28.6	26.5	24.2	21.6	18.7	15.2	11.0	5.8
	30	38.3	36.8	35.2	33.5	31.7	29.8	27.8	25.6	23.2	20.5	17.4	13.7	9.2	3.5	
	40	37.6	36.0	34.4	32.7	30.9	28.9	26.8	24.5	22.0	19.1	15.8	11.7	6.7		
	50	36.9	35.3	33.6	31.9	30.0	28.0	25.8	23.4	20.7	17.7	14.0	9.5			
	60	36.2	34.5	32.8	31.0	29.1	27.0	24.7	22.2	19.4	16.1	12.1	7.1			

4" Water Well - Two Wire - Single Phase - 60 HZ

HP	KW	Downward Thrust Lbs	Volts	Service Factor	Franklin Model No.	A.Y. McDonald Model No.
1/3	.25	300	115	1.75	244 502 90	3129-731
		300	230	1.75	244 503 90	3129-732
1/2	.37	300	115	1.60	244 504 90	3129-736
		300	230	1.60	244 505 90	3129-733
3/4	.55	300	230	1.50	244 507 90	3129-734
1	.75	650	230	1.40	244 508 90	3129-735
1 1/2	1.1	650	230	1.30	244 309 90	3129-755

4" Water Well - Three Wire - Single Phase - 60 HZ

HP	KW	Downward Thrust Lbs	Volts	Service Factor	Franklin Model No.	Franklin Control Box	A.Y. McDonald Model No.	A.Y. McDonald Control Box
1/3	.25	300	115	1.75	214 502 90	280 102 49	3129-364	6618-116
		300	230	1.75	214 503 90	280 103 49	3129-365	6618-117
1/2	.37	300	115	1.60	214 504 90	280 104 49	3129-366	6618-118
		300	230	1.60	214 505 90	280 105 49	3129-367	6618-119
3/4	.55	300	230	1.50	214 507 90	280 107 49	3129-359	6617-110
1	.75	650	230	1.40	214 508 90	280 108 49	3129-360	6617-111
1 1/2	1.1	650	230	1.30	224 300 92	282 300 81	3129-361	6617-428
2	1.5	650	230	1.25	224 301 92	282 301 81	3129-396	6617-113

4" Water Well - Three Wire - Three Phase - 60 HZ

HP	KW	Downward Thrust Lbs	Volts	Service Factor	Franklin Model No.	A.Y. McDonald Model No.
1/2	.37	300	230	1.60	234 511 92	3129-788
		300	460	1.60	234 521 94	3129-789
3/4	.55	300	200	1.50	234 502 92	3129-853
		300	230	1.50	234 512 92	3129-790
		300	460	1.50	234 522 94	3129-791
1	.75	650	200	1.40	234 503 92	3129-856
		650	230	1.40	234 513 92	3129-792
		650	460	1.40	234 523 94	3129-793
1 1/2	1.1	650	200	1.30	234 504 92	3129-839
		650	230	1.30	234 514 92	3129-794
		650	460/380*	1.30/1.0	234 524 94	3129-795
		650	575	1.30	234 534 94	3129-869
2	1.5	650	200	1.25	234 305 92	3129-798
		650	230	1.25	234 315 92	3129-796
		650	460/380*	1.25/1.0	234 325 94	3129-797
		650	575	1.25	234 335 94	3129-855

Do not use motors in swimming areas

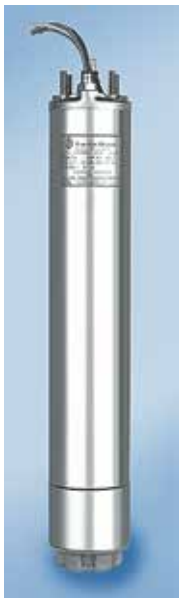

4" High Thrust Water Well - Three Wire - Single Phase - 60 HZ (Control Box Required)

HP	KW	Downward Thrust Lbs	Volts	Service Factor	Franklin Model No.	Franklin Control Box	A.Y. McDonald Model No.	A.Y. McDonald Control Box
3	2.2	900	230	1.15	224 302 26	282 302 83	3129-363	6617-142
3	2.2	1500	230	1.15	224 302 86	282 302 83	3129-880	6617-142
5	3.7	1500	230	1.15	224 303 86	282 113 93	3129-717	6617-134

4" High Thrust Water Well - Three Wire - Three Phase - 60 HZ
(Special Control Required - See note)

HP	KW	Downward Thrust Lbs	Volts	Service Factor	Franklin Model No.	A.Y. McDonald Model No.
3	2.2	900	200	1.15	234 306 26	3129-846
		900	230	1.15	234 316 26	3129-709
		900	460/380*	1.15	234 326 26	3129-807
		900	575	1.15	234 336 26	3129-868
5	3.7	1500	200	1.15	234 307 86	3129-847
		1500	230	1.15	234 317 86	3129-718
		1500	460/380*	1.15	234 327 86	3129-808
		1500	575	1.15	234 337 86	3129-835
7 1/2	5.5	1500	200	1.15	234 308 86	3129-848
		1500	230	1.15	234 318 86	3129-783
		1500	460/380*	1.15	234 328 86	3129-784
		1500	575	1.15	234 338 86	3129-866
10	7.5	1500	460/380*	1.15	234 595 86	3129-785
		1500	575	1.15	234 598 86	3129-883

Note:
Franklin does not manufacture three-phase controls. Standard three-phase contactor with overload protection is required for positive motor protection.

Warranty is void where proper overload protection is not employed.

Quick Disconnect (QD)

- For use with three wire single phase submersible motors 1/3 through 1 HP

HP	KW	Volts	HZ	Franklin Model No.	A.Y. McDonald Model No.
1/3	.25	115	60	280 102 49	6618-116
1/3	.25	230	60	280 103 49	6618-117
1/2	.37	115	60	280 104 49	6618-118
1/2	.37	230	60	280 105 49	6618-119
3/4	.55	230	60	280 107 49	6617-110
1	.75	230	60	280 108 49	6617-111

Capacitor Start/Capacitor Run CRC Control Boxes

HP	Volts	HZ	Franklin Model No.	A.Y. McDonald Model No.
1/2	230	60	282 405 50	6617-116
3/4	230	60	282 407 50	6617-117
1	230	60	282 408 50	6617-118

Standard Integral HP

- For use with single phase submersible motors 1 1/2 through 5 HP

HP	KW	Volts	HZ	Franklin Model No.	A.Y. McDonald Model No.
1 1/2	1.1	230	60	282 300 81	6617-428
2	1.5	230	60	282 301 81	6617-113
3	2.2	230	60	282 302 81	6617-114
5	3.7	230	60	282 113 81	6617-133

Deluxe Integral HP Includes Magnetic Contactor

- For use with single phase submersible motors 2 through 5 HP - 60 HZ

HP	KW	Volts	Coil Inrush Current	Franklin Model No.	A.Y. McDonald Model No.
2	1.5	230	0.22 Amps	282 301 83	6617-141
3	2.2	230	0.22 Amps	282 302 83	6617-142
5	3.7	230	0.22 Amps	282 113 93	6617-134

QD Pumptec

- For use with 4" single phase, three wire submersible motors 1/3 through 1 HP.

Protects against:
- Low yield wells - Low voltage - Power surges
- Air or gas locked pump - Drop in water level
- Clogged well screen - Broken shaft or coupling - Worn pump parts

HP	Volts	HZ	Franklin Model No.	A.Y. McDonald Model No.
1/3-1	230	60	580 007 0600	6617-145

Pumptec - with remote reading

- For use with 4" single phase submersible motors 1/3 through 1 1/2 HP.

Protects against:
- Low yield wells -Low voltage
- Air or gas locked pump - Drop in water level
- Clogged well screen - Broken shaft or coupling - Worn pump parts

HP	Volts	HZ	Franklin Model No.	A.Y. McDonald Model No.
1/3-1 1/2	115/230	60	580 002 0600	6617-425

Pumptec-Plus

- For use with 4" single phase submersible motors 1/2 through 5 HP.

Protects against:
- Over/under load - Over/under voltage
- Low yield wells - Mud or sand clogging
- Cavitation (air lock) - Drop in water level
- Rapid cycling - Faulty check valve

HP	Volts	HZ	Franklin Model No.	A.Y. McDonald Model No.
1/2-5	230	60	580 006 0100	6617-143

Subdrive 15

- For Indoor/Outdoor use.
- For use in residential or light commercial constant pressure applications with McDonald 3/4 HP pump end mounted to a 1 1/2 HP Franklin Electric three phase motor.

Built-in protection and diagnostics:
- Surge protection - Underload - Undervoltage
- Locked pump - Open circuit - Short circuit
- Overheated controller

HP	Volts	HZ	Franklin Model No.	A.Y. McDonald Model No.	Nema Rating
1 1/2	208/230	60	587 020 510 3	**6617-433**	Nema 3R

Subdrive 75

- For Outdoor use.
- For use in residential or light commercial constant pressure applications with a McDonald 3/4 HP pump end mounted to a 1 1/2 HP Franklin Electric three phase motor.

Built-in protection and diagnostics:
- Surge protection - Underload - Undervoltage
- Locked pump - Open circuit - Short circuit
- Overheated controller

HP	Volts	HZ	Franklin Model No.	A.Y. McDonald Model No.	Nema Rating
1 1/2	230	60	587 020 338 4	**6617-156**	Nema 4

Subdrive 20

- For Indoor/Outdoor use.
- For use in residential or light commercial constant pressure applications with a McDonald 1 HP pump end mounted to a 2 HP Franklin Electric three phase motor.

Built-in protection and diagnostics:
- Surge protection - Underload - Undervoltage
- Locked pump - Open circuit - Short circuit
- Overheated controller

HP	Volts	HZ	Franklin Model No.	A.Y. McDonald Model No.	Nema Rating
2	208/230	60	587 020 530 3	**6617-435**	Nema 3R

Subdrive 100

- For Outdoor use.
- For use in residential or light commercial constant pressure applications with a McDonald 1 HP pump end mounted to a 2 HP Franklin Electric three phase motor.

Built-in protection and diagnostics:
- Surge protection - Underload - Undervoltage
- Locked pump - Open circuit - Short circuit
- Overheated controller

HP	Volts	HZ	Franklin Model No.	A.Y. McDonald Model No.	Nema Rating
2	230	60	587 020 410 4	**6617-158**	Nema 4

Subdrive 30

- For Indoor/Outdoor use.
- For use in residential or light commercial constant pressure applications with a McDonald 1 1/2 HP pump end mounted to a 3 HP Franklin Electric three phase motor.

Built-in protection and diagnostics:
- Surge protection - Underload - Undervoltage
- Locked pump - Open circuit - Short circuit
- Overheated controller

HP	Volts	HZ	Franklin Model No.	A.Y. McDonald Model No.	Nema Rating
3	208/230	60	587 020 540 3	**6617-435**	Nema 3R

Subdrive 150

- For Outdoor use.
- For use in residential or light commercial constant pressure applications with a McDonald 1 1/2 HP pump end mounted to a 3 HP Franklin Electric three phase motor.

Built-in protection and diagnostics:
- Surge protection - Underload - Undervoltage
- Locked pump - Open circuit - Short circuit
- Overheated controller

HP	Volts	HZ	Franklin Model No.	A.Y. McDonald Model No.	Nema Rating
3	230	60	587 020 415 4	**6617-155**	Nema 4

Subdrive 300

- For Outdoor constant pressure use.
- For use with McDonald 3 HP pump end mounted to a 5 HP Franklin Electric three phase motor.

Built-in protection and diagnostics:
- Surge protection - Underload - Undervoltage
- Locked pump - Open circuit - Short circuit
- Overheated controller

HP	Volts	HZ	Franklin Model No.	A.Y. McDonald Model No.	Nema Rating
5	220/260	60	587 020 630 0	**6617-153**	Nema 4

SubDrive 2W

- For Indoor/Outdoor constant pressure use.
- For use with existing 1/2, 3/4, & 1 HP
- * Single Phase System, Two Wire Franklin Electric Motor

Built-in protection and diagnostics:
- Surge protection - Underload - Undervoltage
- Locked pump - Open circuit - Short circuit
- Overheated controller

HP	Volts	HZ	Franklin Model No.	A.Y. McDonald Model No.	Nema Rating
1/2 - 1	207/260	60	587 020 322 3	**6617-164**	Nema 3R

Monodrive

- For Indoor/Outdoor constant pressure use.
- For use with existing 1/2, 3/4 & 1 HP
* Single Phase System, Three Wire Franklin Electric Motor

Built-in protection and diagnostics:
- Surge protection - Underload - Undervoltage
- Locked pump - Open circuit - Short circuit
- Overheated controller

HP	Volts	HZ	Franklin Model No.	A.Y. McDonald Model No.	Nema Rating
1/2 - 1	208/230	60	587 020 500 3	**6617-432**	Nema 3R

Monodrive

- For Outdoor constant pressure use.
- For use with existing 1/2, 3/4 & 1 HP
* Single Phase System, Three Wire Franklin Electric Motor

Built-in protection and diagnostics:
- Surge protection - Underload - Undervoltage
- Locked pump - Open circuit - Short circuit
- Overheated controller

HP	Volts	HZ	Franklin Model No.	A.Y. McDonald Model No.	Nema Rating
1/2 - 1	230	60	587 020 311 4	**6617-159**	Nema 4

Monodrive XT

- For Indoor/Outdoor constant pressure use.
- For use with existing 1 1/2 & 2 HP
* Single Phase System, Three Wire Franklin Electric Motor

Built-in protection and diagnostics:
- Surge protection - Underload - Undervoltage
- Locked pump - Open circuit - Short circuit
- Overheated controller

HP	Volts	HZ	Franklin Model No.	A.Y. McDonald Model No.	Nema Rating
1 1/2 & 2	230	60	587 020 520 3	**6617-434**	Nema 3R

Monodrive XT

- For Outdoor constant pressure use.
- For use with existing 1 1/2 & 2 HP
* Single Phase System, Three Wire Franklin Electric Motor

Built-in protection and diagnostics:
- Surge protection - Underload - Undervoltage
- Locked pump - Open circuit - Short circuit
- Overheated controller

HP	Volts	HZ	Franklin Model No.	A.Y. McDonald Model No.	Nema Rating
1 1/2 & 2	230	60	587 020 411 4	**6617-160**	Nema 4

For additional information on Constant Pressure, see the Pressure Master Catalog or contact factory.

Contactors

IEC Contactors for three phase motors
Each kit includes Nema 1 enclosure, contactor, and overload assembled with the correct voltage coil needed.

CONTACTORS WITH 200V COIL

A.Y. McDonald Part No.	HP	Volts
3131-290	1/2	200
3131-291	3/4	200
3131-292	1	200
3131-293	1 1/2	200
3131-294	2	200
3131-295	3	200
3131-296	5	200
3131-297	7 1/2	200
3131-298	10	200
3131-299	15	200
3131-300	20	200
3131-301	25	200
3131-302	30	200

CONTACTORS WITH 230V COIL

A.Y. McDonald Part No.	HP	Volts
3131-303	1/2	230
3131-304	3/4	230
3131-305	1	230
3131-306	1 1/2	230
3131-307	2	230
3131-308	3	230
3131-309	5	230
3131-310	7 1/2	230
3131-311	10	230
3131-312	15	230
3131-313	20	230
3131-314	25	230
3131-315	30	230

CONTACTORS WITH 460V COIL

A.Y. McDonald Part No.	HP	Volts
3131-316	1/2	460
3131-317	3/4	460
3131-318	1	460
3131-319	1 1/2	460
3131-320	2	460
3131-321	3	460
3131-322	5	460
3131-323	7 1/2	460
3131-324	10	460
3131-325	15	460
3131-326	20	460
3131-327	25	460
3131-328	30	460
3131-329	40	460
3131-330	50	460
3131-331	60	460
3131-332	75	460

Pump Accessories

A.Y. McDonald offers a full line of accessories to complete your pumping system.

No-Lead Silicon Bronze Check Valves Spring Loaded

400 PSI working pressure. Bronze finished body

500SB - FNPT x FNPT, No tappings
3/4", 1", 1 1/4", 1 1/2", 2"

540SB - FNPT x FNPT, tapped 1/8" and 1/4"
1", 1 1/4", 1 1/2", 2"

500MS - FNPT x MNPT, No tappings
1" x 1 1/4", 1 1/4" x 1 1/4", 2" x 2"

Stainless Steel Check Valves - Spring Loaded

400 PSI working pressure.

500MSS - FNPT x MNPT, No tappings
1" x 1 1/4", 1 1/4" x 1 1/4"

400SB - No-Lead Silicon Bronze Foot Valves

Perforated stainless steel strainer - Spring loaded
200 PSI working pressure
3/4", 1", 1 1/4", 1 1/2", 2"

6214 - No-Lead Pressure Relief Valves

- No-Lead Brass Construction
- Composition Disc on Brass Seat
- 180°F Max. Temperature
- Field Adjusting Not Recommended

Sizes Available:

- 1/2", 3/4", 1" - Factory set at 75 PSI or 30 PSI
- 1 1/4", 1 1/2", 2" - Factory Set at 65 PSI or 30 PSI

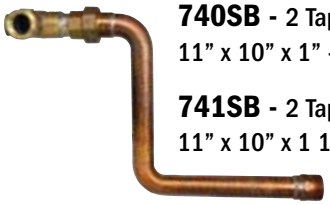

No-Lead Elevated Tank Tees

740SB - 2 Taps - 3/4" x 1"
11" x 10" x 1" - Length x Height x Connection

741SB - 2 Taps - 1" x 1 1/4"
11" x 10" x 1 1/4" - Length x Height x Connection

1/2" - 1 1/4"

1 1/2" - 2"

Pump Accessories

Pipe Holder - 8871

For 1", 1 1/4", 1 1/2", or 2" pipe

- Solid cast iron construction
- Time proven design
- 2000 lb. non-shock load limit

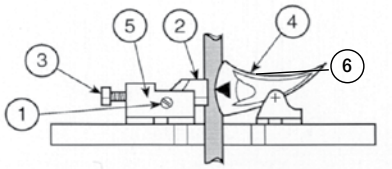

Pipe Holder Repair Parts

1 - 3117-612 Set screw 1/2-13 x 3/4
2 - 6814-236 Adjusting slide
3 - 3117-611 Adjusting screw
4 - 6814-235 Pipe holder dog
5 - 6814-234 Body Casting
6 - 6814-237 Pin
7 - 6814-238 Wood Base

Sanitary Well Seals

Two-piece, cast iron construction. Rubber Composition Seal.

459S - One Pipe

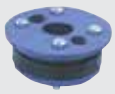

4" well.....1", 1 1/4"
4 1/2" well .....1 1/4"
5" well.....1", 1 1/4"
5 5/8" well .....1 1/4"
6" well.....1", 1 1/4", 1 1/2", 2"

460S - Two Pipe

4" well.....1 1/4" x 1"
5" well.....1 1/4" x 1"
5 5/8" well .....1 1/4" x 1"
6" well.....1 1/4" x 1"
6" well.....1 1/2" x 1 1/4"

Plastic Sanitary Well Seals

Two-piece, plastic construction.
Rubber Composition Seal.

401S - 4" well..... 1"
402S - 4" well..... 1 1/4"
451S - 4 1/2" well..... 1"
452S - 4 1/2" well... 1 1/4"
453S - 4 1/2" well ... 1 1/2"
501S - 5" well..... 1"
601S - 6" well..... 1"
602S - 6" well..... 1 1/4"

Also available in two pipe, contact factory.

Air Volume Controls

Float Types

894 3129-383 Deep Well

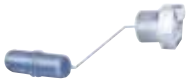

Diaphragm type

30-AV **3129-378** - 1/4"
42-AV **3129-388** - 1/4"
80-AV **3129-379** - 1/4"
120-AV **3129-380** - 3/8"
45-AV **3129-389** - 1/4"
100-AV **3129-386** - 3/8"

REPAIR KITS available (see price list)

Float & Valve

8713 Float Valve
18" long - 3/4" or 1"
Repair Parts available (see price list)

8715 Floats for Float Valve
3" x 12" diameter float

Pressure Gauge

5999-897 Pressure Gauge
0-100 lbs. - 2" Dial - MPT. 1/4" No-Lead brass stem.
Steel case, Vertical installation

For electrical accessories, please see price list.

Switches

"FSG" Pressure switches are rated to 1 1/2 HP, 115V, single phase and/or 2 HP, 230V, single phase or up to 3 HP, 230V, three phase. Submersible pumps above 2 HP, one phase require deluxe control boxes with these switches.

A.Y. McDONALD MODEL NO.	SIZE	SETTING	MODEL
3129-421	1/4"	20-40	(9013FSG2J20)
3129-423	1/4"	30-50	(9013FSG2J21)
3129-432	1/4"	40-60	(9013FSG2J24)
3129-442	1/4"	20-40	(9013FSG2J20C20) 20 pack
3129-443	1/4"	30-50	(9013FSG2J21C20) 20 pack
3129-448	1/4"	40-60	(9013FSG2J24C20) 20 pack

Switches with "P" include pulsation plug to dampen surges to the switch

3129-414	1/4"	20-40	(9013FSG2J20P)
3129-436	1/4"	30-50	(9013FSG2J21P)

A.Y. McDONALD MODEL NO.	SIZE	SETTING	MODEL

Switches with "M4" include auto cut-off if pressure drops to about 10 PSIG below cut-in pressure - requires manual reset with lever provided.

3129-420	1/4"	20-40	(9013FSG2J20M4)
3129-433	1/4"	30-50	(9013FSG2J21M4)
3129-438	1/4"	40-60	(9013FSG2J24M4)

Switches with "M1" include manual cut-off lever to allow circuit interruption at the switch to service the pump.

3129-439	1/4"	30-50	(9013FSG2J21M1)

A.Y. McDONALD MODEL NO.	SIZE	SETTING	MODEL

"GSG" heavier duty switches are rated to 3 HP 230 V. Single phase and 5 HP 230 V. Three phase plus DC to 1 HP. They require use of deluxe control boxes on submersible pumps above 3 HP single phase.

3129-430	1/4"	20-40	(9013GSG2J20)
3129-435	1/4"	30-50	(9013GSG2J21)
3129-434	1/4"	40-60	(9013GSG2J24)

A.Y. McDONALD MODEL NO.	SIZE	SETTING	MODEL
3129-457	1/4"	20-40	
3129-458	1/4"	30-50	
3129-459	1/4"	40-60	

A.Y. McDonald Mfg. Co. is a leading manufacturer of Water Works Brass, Plumbing Valves, Pumps and Water Systems, and High Pressure Gas Valves and Meter Bars. The Company has distinguished itself with a proud tradition of quality and reliability since its founding in 1856.

The mission of A.Y. McDonald Mfg. Co., in the words of our founder, is "to make good products and sell them honestly." We, the stockholders and employees, accomplish this by extending the McDonald family culture through excellent customer service and by focusing on our customers' needs.

WARNING: It is unlawful in **CALIFORNIA & VERMONT (effective 1/1/2010); MARYLAND (effective 1/1/2012); LOUISIANA (effective 1/1/2013) and the UNITED STATES OF AMERICA (effective 1/4/2014)** to use any product in the installation or repair of any public water system or any plumbing in a facility or system that provides water for human consumption if the wetted surface area of the product has a weighted average lead content greater than 0.25%. This prohibition does not extend to service saddles used in California, Louisiana or under USA Public Law 111-380.

EST. 1856
McDonald®

More than a brand. **We're a family.**

aymcdonald.com ◆ 1-800-292-2737 ◆ sales@aymcdonald.com

5/15