ATRIO

Three-Hole Bidet Faucet M-Size

MODEL # 24016000

Pure Freude an Wasser

GROHE

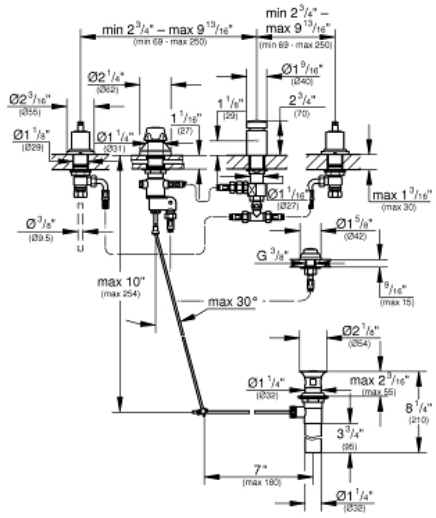

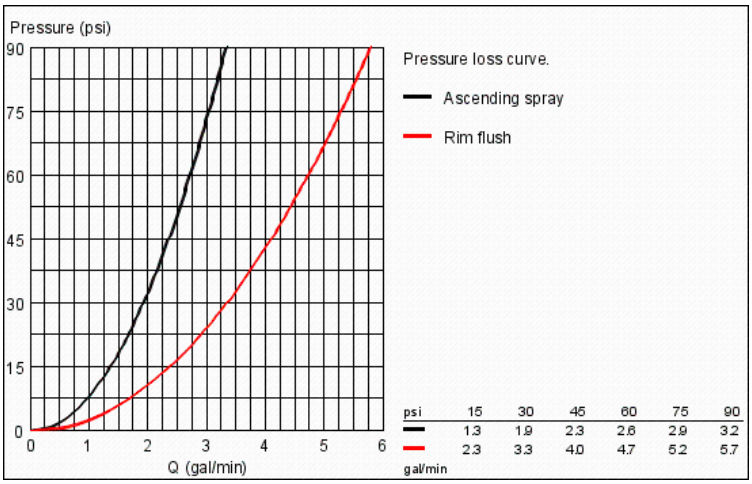

Product Description:
ATRIO
Three-Hole Bidet Faucet M-Size

Standard Specification:
- **GROHE StarLight** chrome finish
- Diverter: rim flush/bidet spray
- Check installation compatibility with bidet fixture
- Less handles – order (18 026) or (18 027) (sold separately)

Applicable Codes & Standards:
- Energy Policy Act of 1992
- ASME A112.18.1/CSA B125.1

Color:
❑ 24016000 StarLight Chrome