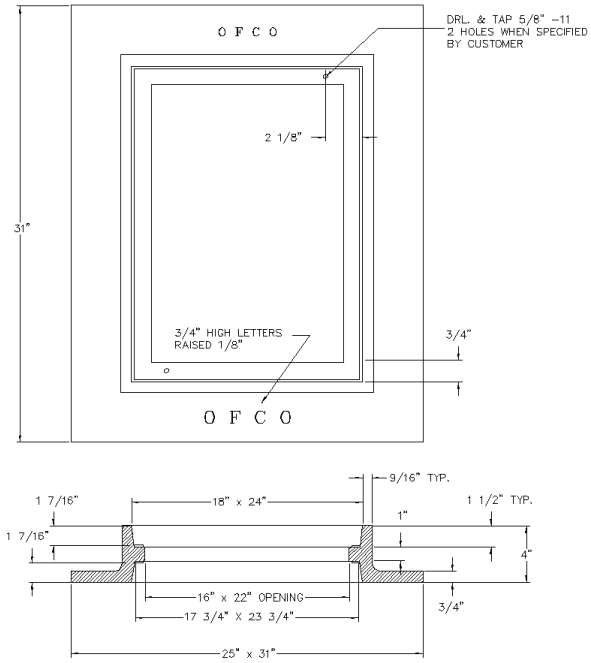

NOTES: King County STD. 2-014			OLYMPIC FOUNDRY INC.		
			18" X 24" REVERSIBLE FRAME		
MATL: Cast Iron ASTM A48, CL30			RATING: H-20	PART NO. SM50	
APPROX WT: 125 Lbs			REV: A DATE: 7/3/2003 New border		REV A
DOCUMENT APPROVED BY: DATE:	DWN: CL DATE: 7/3/2003	TOLERANCE XX +- .1 XXX +- .06 XXXX +- .030 < +- 2 DEG	REV: DATE:		
	CHKD: CL DATE: 7/3/2003		DWG #: SM50 FRAME	SCALE: N/A	SHEET: 1 OF 1