CROSLEY
FURNITURE

Small Record Player Stand
CF1192

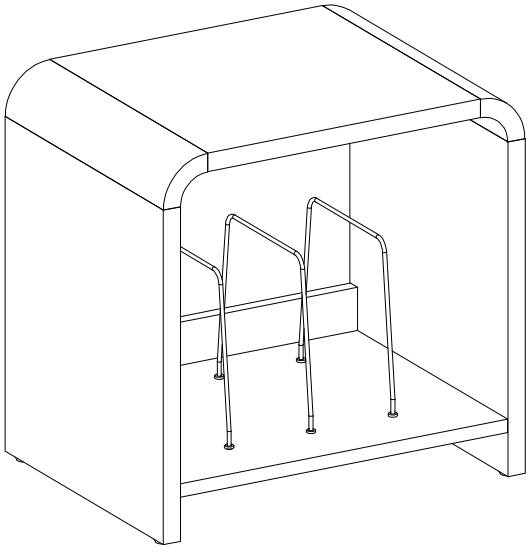

PARTS LIST

A	B	C	D	E
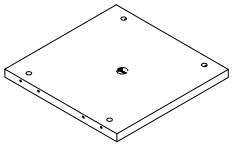	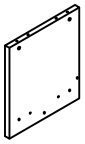	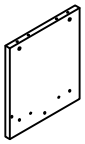	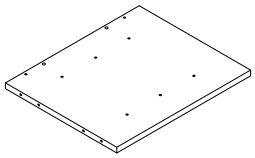	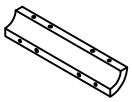
Top Panel 1 PC	Left Panel 1 PC	Right Panel 1 PC	Bottom Panel 1 PC	Corner 2 PCS

F	G	H
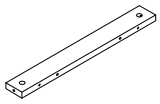	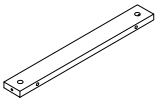	
Upper Rail 1 PC	Lower Rail 1 PC	Metal Wire 3 PCS

HARDWARE LIST

#1	#2	#3	#4	#5
 7*38mm			 8*30mm	 10*50mm
Tapping Bolt 2 PCS (Extra 1)	Cam Bolt 16 PCS (Extra 1)	Cam Lock 16 PCS (Extra 1)	Short Wood Dowel 8 PCS (Extra 1)	Long Wood Dowel 8 PCS (Extra 1)

#6	#7	#8	#9	#10
	 8*4*50mm		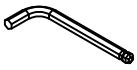 M4	
Hex Nut 6 PCS (Extra 1)	Flat Head Screw 2 PCS (Extra 1)	Wrench 1 PC	Allen Wrench 1 PC	Cam Sticker 16 PCS (Extra 1)

ADDITIONAL TOOLS (Not Provided)

Note: It is not recommended to use power tools during assembly.

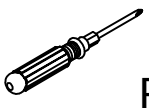

Phillips Head Screwdriver

Note: Wood dowels are intended for alignment. Additional clearance between wood dowel and pre-drilled hole is intentional for ease of assembly.

Step 1. Insert cam bolts (part #2) into pre-drilled holes of panels (parts B, C & E) using phillips head screwdriver.

Note: Do not over tighten cam bolts. Stop tightening once threads on cam bolt are no longer visible.

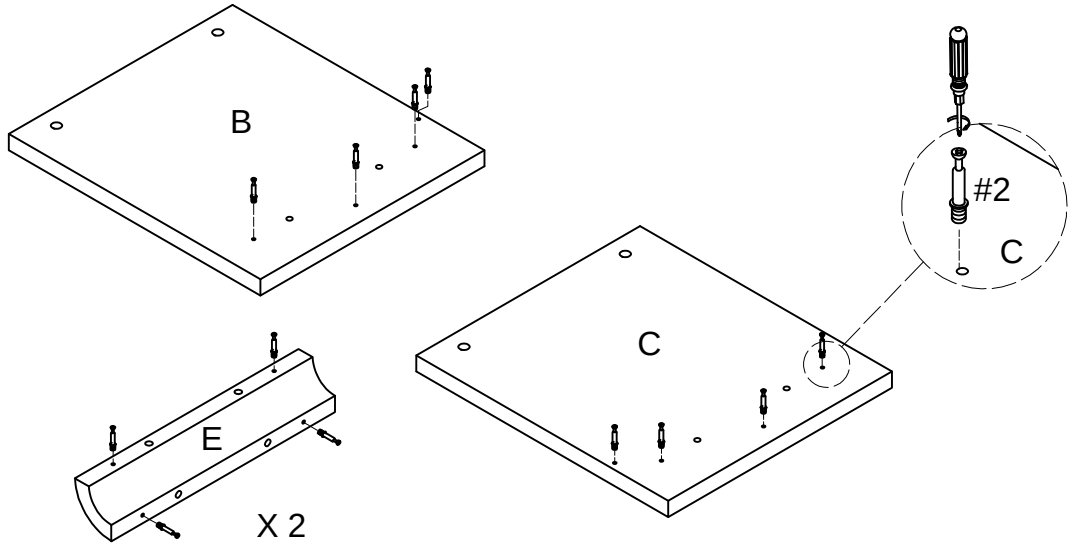

#2 x 16

Step 2. Attach corners (part E) to top panel (part A) using cam locks (part #3), long wood dowels (part #5) and phillips head screwdriver.

Note: Cam locks must rotate a full 180°. See pictured insert.

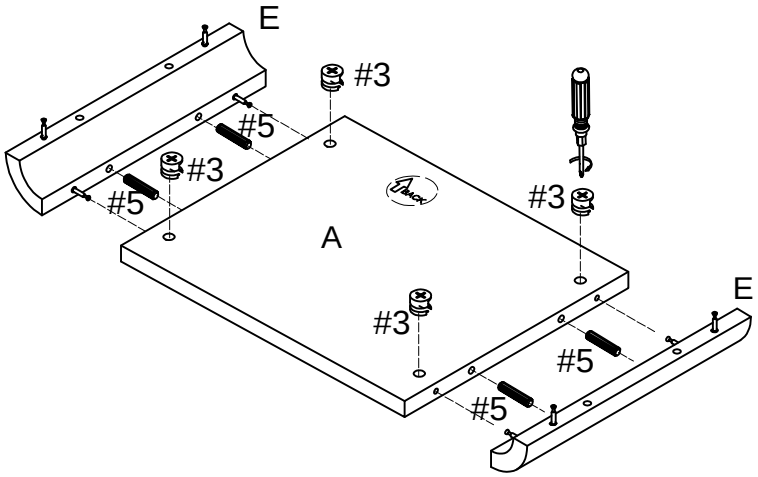

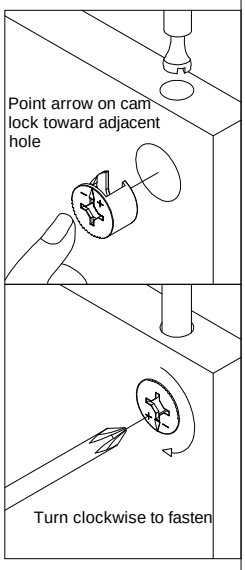

#3 x 4

#5 x 4

Step 3. Attach metal wires (part H) to bottom panel (part D) using hex nuts (part #6) and wrench (part #8).

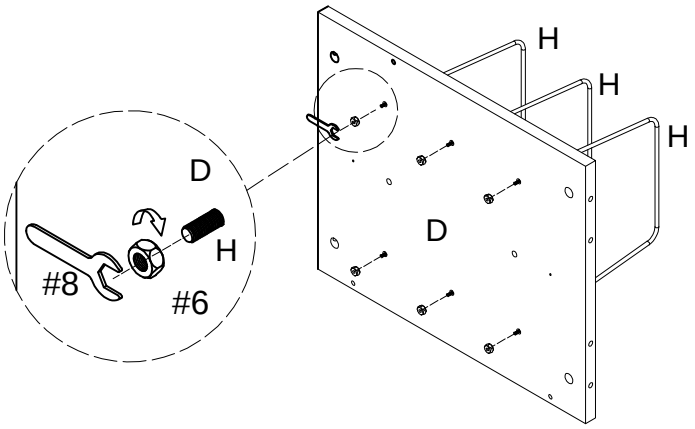

#6 x 6

#8 x 1

Step 4. Attach rails (parts F & G) to bottom panel (part D) using tapping bolts (part #1), short wood dowels (part #4), flat head screws (part #7), allen wrench (part #9) and phillips head screwdriver.

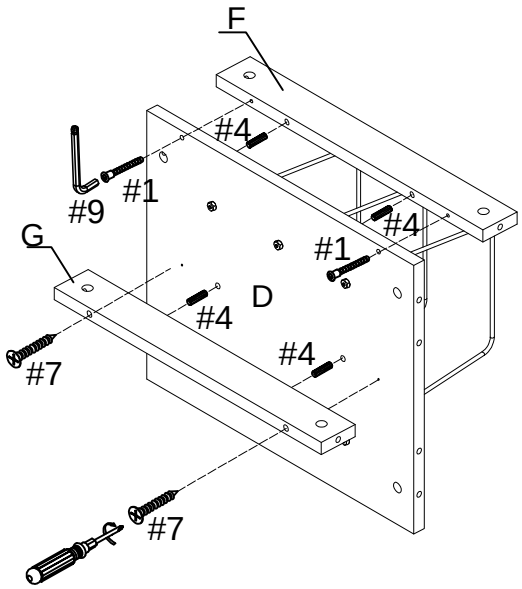

#1 x 2

#4 x 4

#7 x 2

#9 x 1

Step 5. Attach panels (parts B & C) to assembled unit (parts D, F & G) using cam locks (part #3), short wood dowels (part #4) and phillips head screwdriver.

Note: Cam locks must rotate a full 180°. See pictured insert.

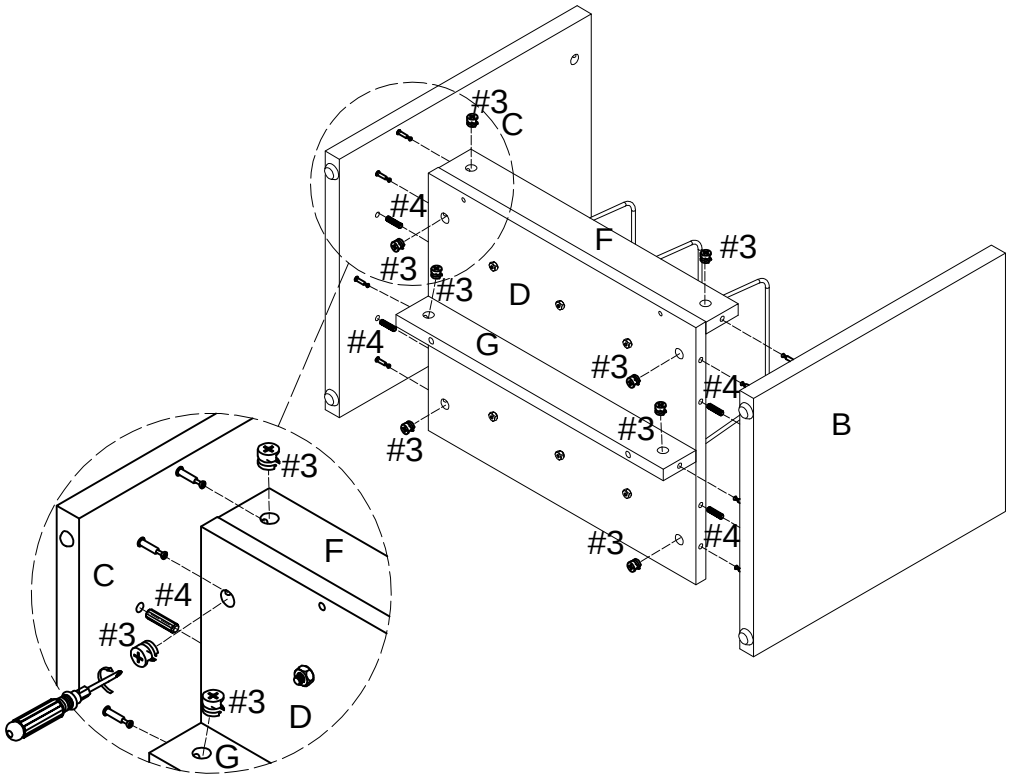

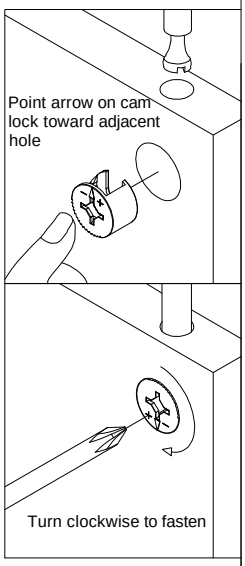

#3 x 8

#4 x 4

Step 6. Attach panels (parts A & E) to assembled unit (parts B & C) using cam locks (part #3), long wood dowels (part #5) and phillips head screwdriver.

Note: Cam locks must rotate a full 180°. See pictured insert.

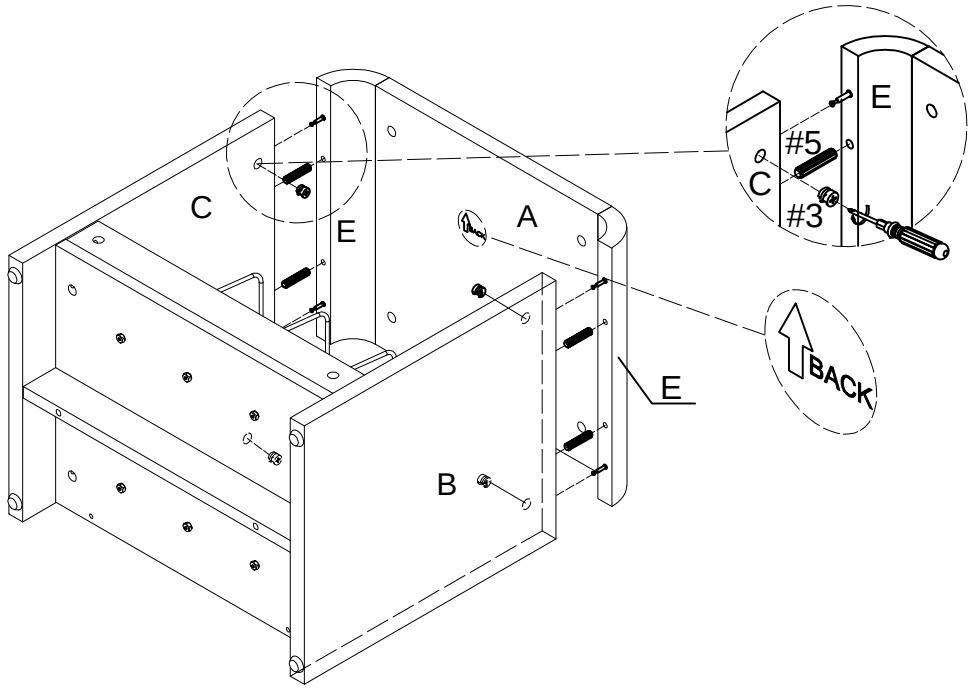

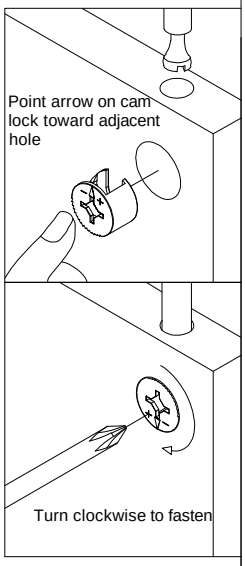

#3 x 4

#5 x 4

Step 7. Carefully turn unit upright. Using cam stickers (part #10) cover all cam locks (part #3).

NOTE: It is important to adjust levelers once fully assembled and upright. Extend adjustable leveler until it's firmly in contact with the floor. If relocating, adjust leveler as needed until it's firmly in contact with the floor in new location.

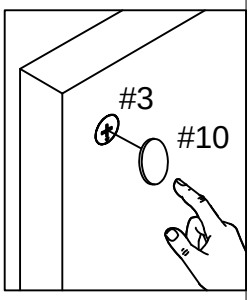

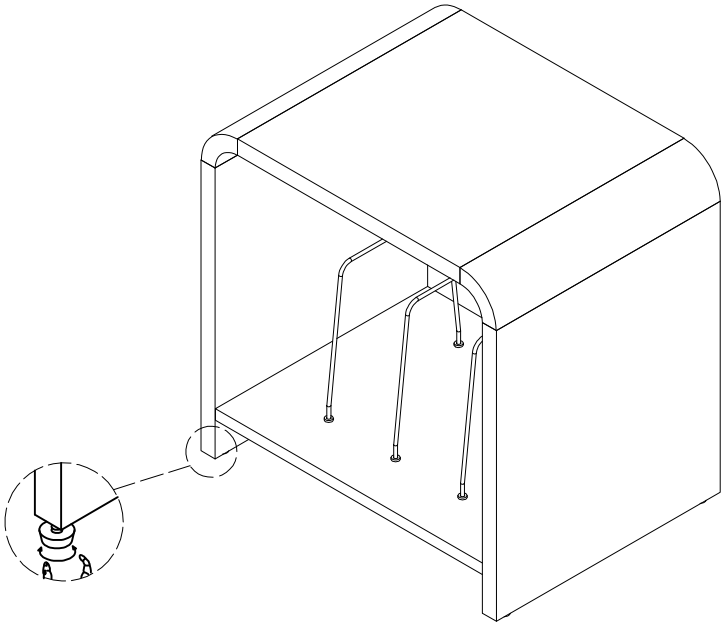

#10  x 16

