CROSLEY
FURNITURE

Record Player Stand
CF1213

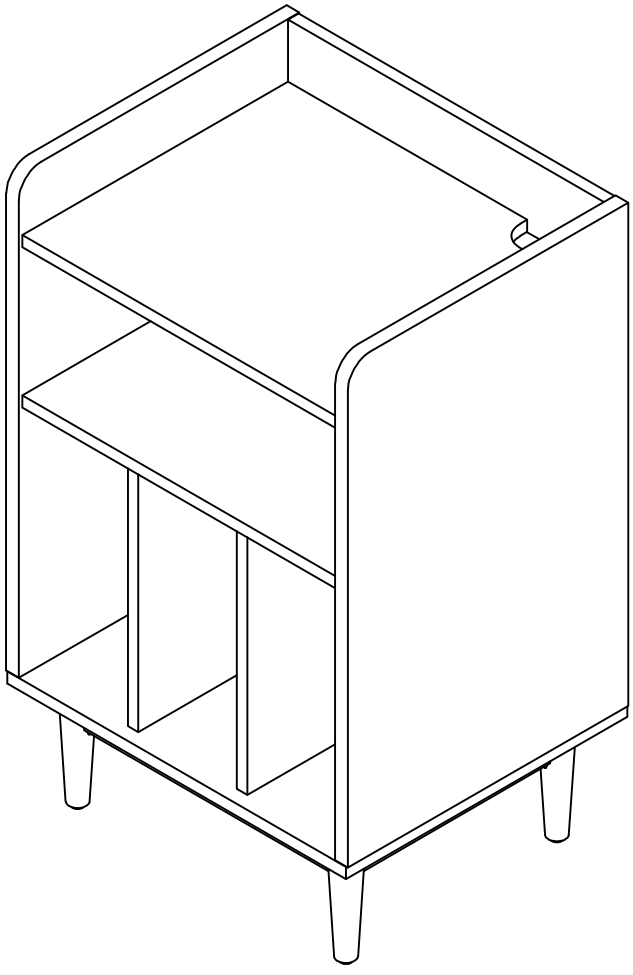

PARTS LIST

A	B	C	D	E
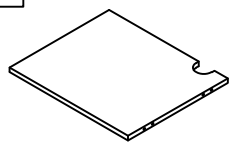	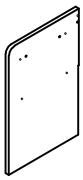	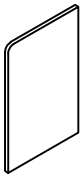	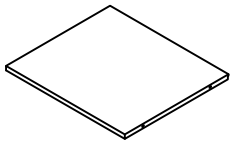	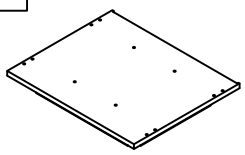
Top Panel 1 PC	Left Panel 1 PC	Right Panel 1 PC	Shelf 1 PC	Bottom Panel 1 PC

F	G	H	I
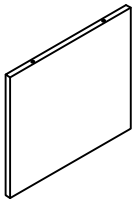	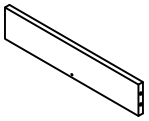	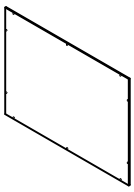	
Partition Panel 2 PCS	Upper Back Panel 1 PC	Lower Back Panel 1 PC	Leg 4 PCS

HARDWARE LIST

#1	#2	#3	#4	#5
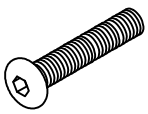 1/4"*45mm	 1/4"*10mm	 1/4"*13mm	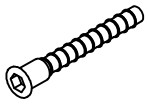	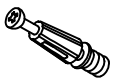
Bolt 8 PCS (Extra 1)	Spring Washer 8 PCS (Extra 1)	Flat Washer 8 PCS (Extra 1)	Tapping Bolt 4 PCS (Extra 1)	Cam Bolt 11 PCS (Extra 1)

#6	#7	#8	#9	#10
	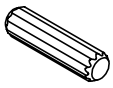 8*30mm	 8*3*12mm	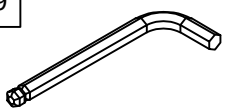 M4	
Cam Lock 11 PCS (Extra 1)	Wood Dowel 18 PCS (Extra 1)	Screw 10 PCS (Extra 1)	Allen Wrench 1 PC	Cam Sticker 11 PCS (Extra 1)

#11

Safety Strap Kit 1 SET

ADDITIONAL TOOLS (Not Provided)

Note: It is not recommended to use power tools during assembly.

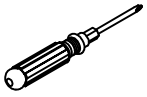

Phillips Head Screwdriver

Note: Wood dowels are intended for alignment. Additional clearance between wood dowel and pre-drilled hole is intentional for ease of assembly.

Step 1. Insert cam bolts (part #5) into pre-drilled holes of panels (parts A, B & G) using phillips head screwdriver.

Note: Do not over tighten cam bolts. Stop tightening once threads on cam bolt are no longer visible.

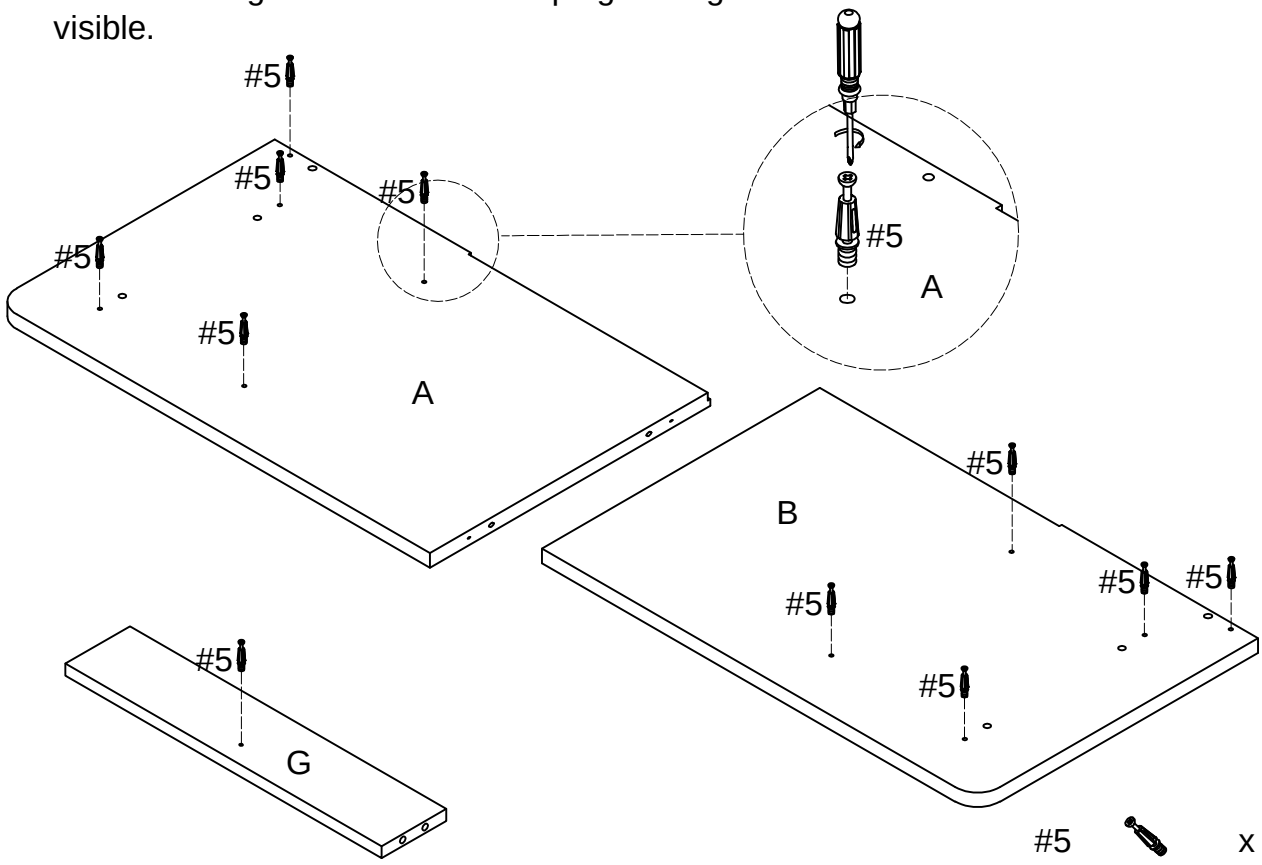

#5 x 11

Step 2. Attach legs (part I) to bottom panel (part E) using bolts (part #1), spring washers (part #2), flat washers (part #3) and allen wrench (part #9).

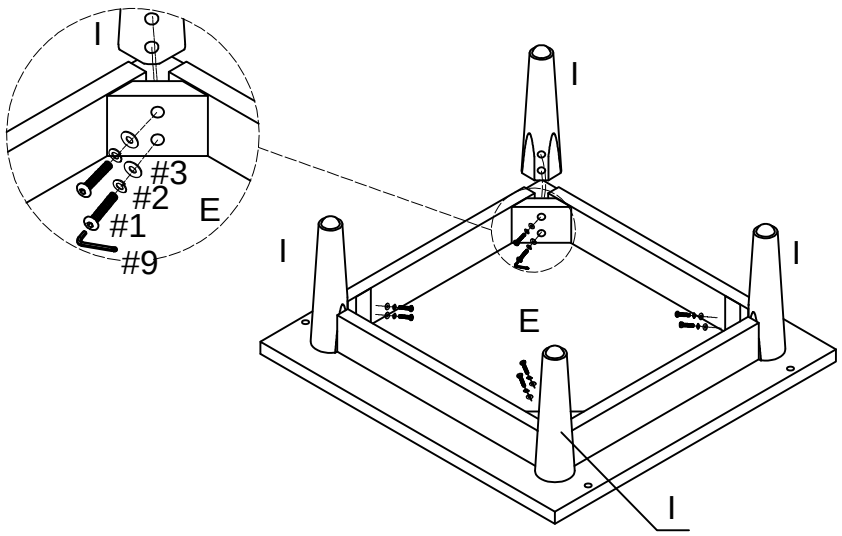

#1 x 8

#2 x 8

#3 x 8

#9 x 1

Step 3. Attach upper back panel (part G) to top panel (part A) using cam lock (part #6) and phillips head screwdriver.

Note: Cam locks must rotate a full 180°. See pictured insert.

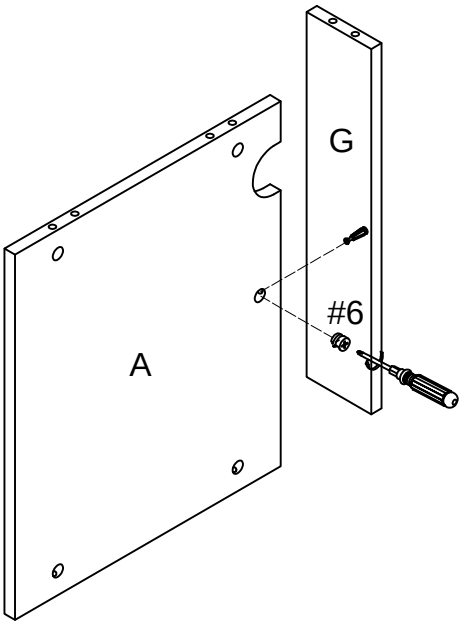

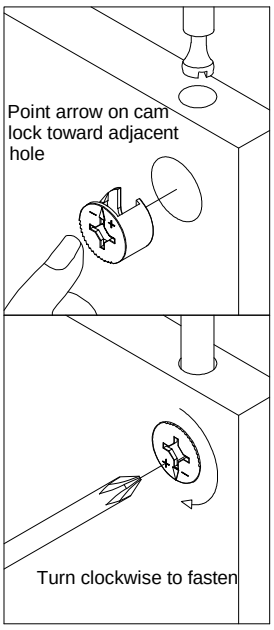

#6 x 1

Step 4. Attach panels (parts B & C) to assembled unit (parts A & G) and shelf (part D) using cam locks (part #6), wood dowels (part #7) and phillips head screwdriver.

Note: Cam locks must rotate a full 180°. See pictured insert.

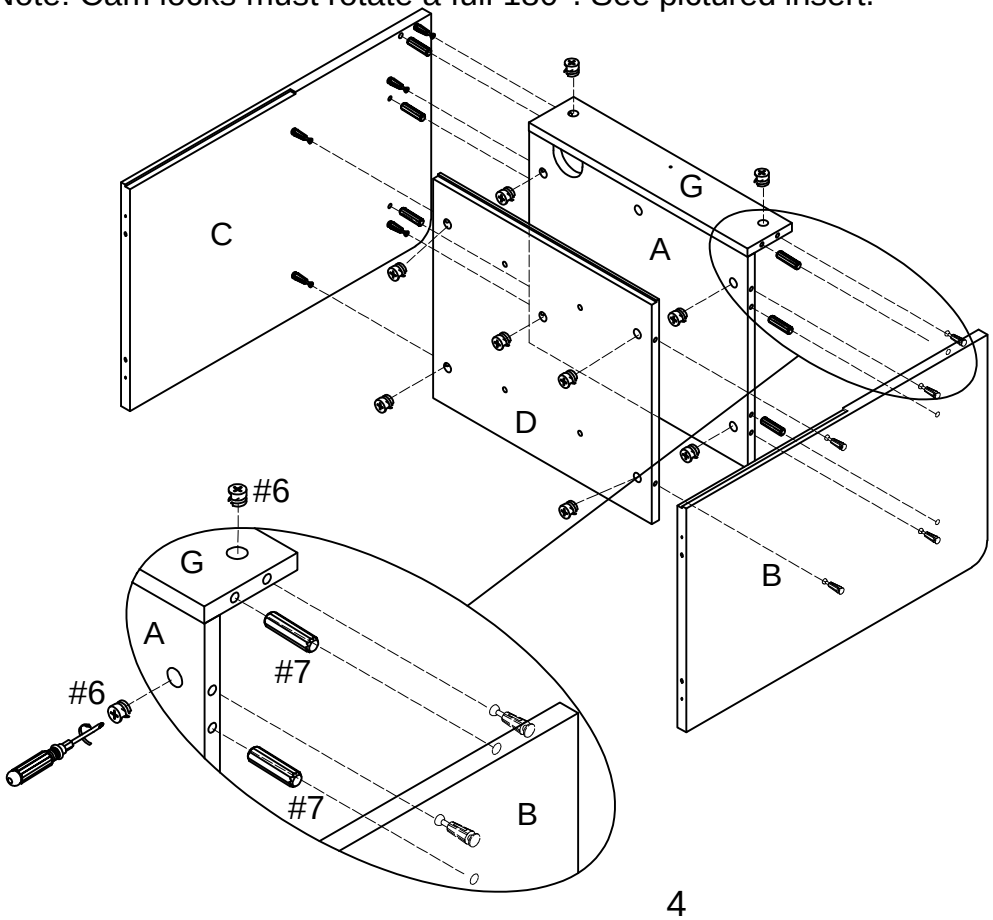

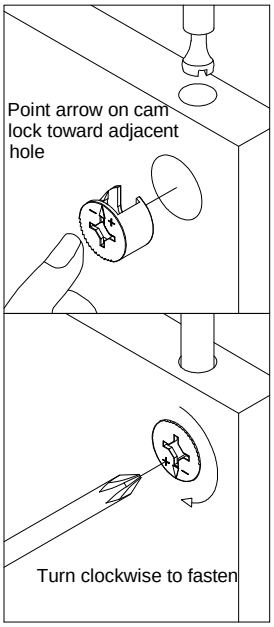

#6 x 10

#7 x 6

Step 5. Attach partition panels (part F) to shelf (part D) using wood dowels (part #7).

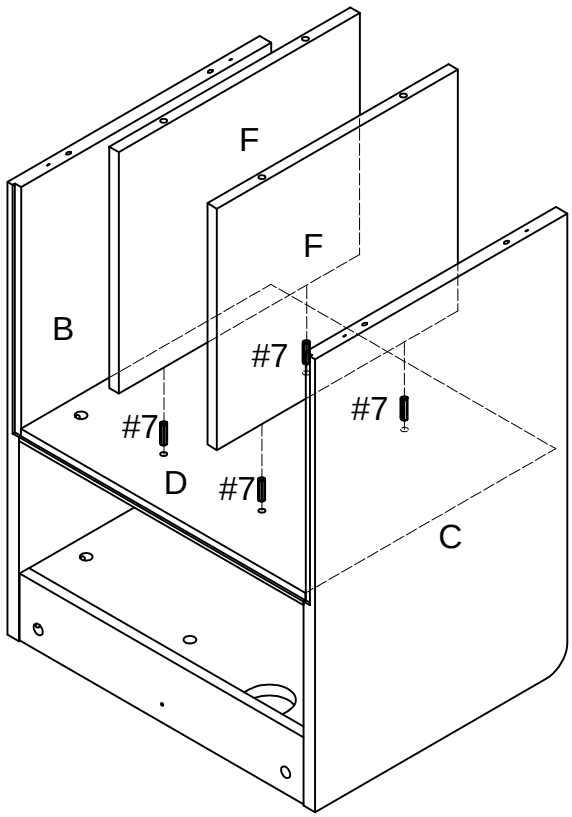

#7 x 4

Step 6. Attach bottom panel (part E) to assembled unit (parts B, C & F) using tapping bolts (part #4), wood dowels (part #7) and allen wrench (part #9).

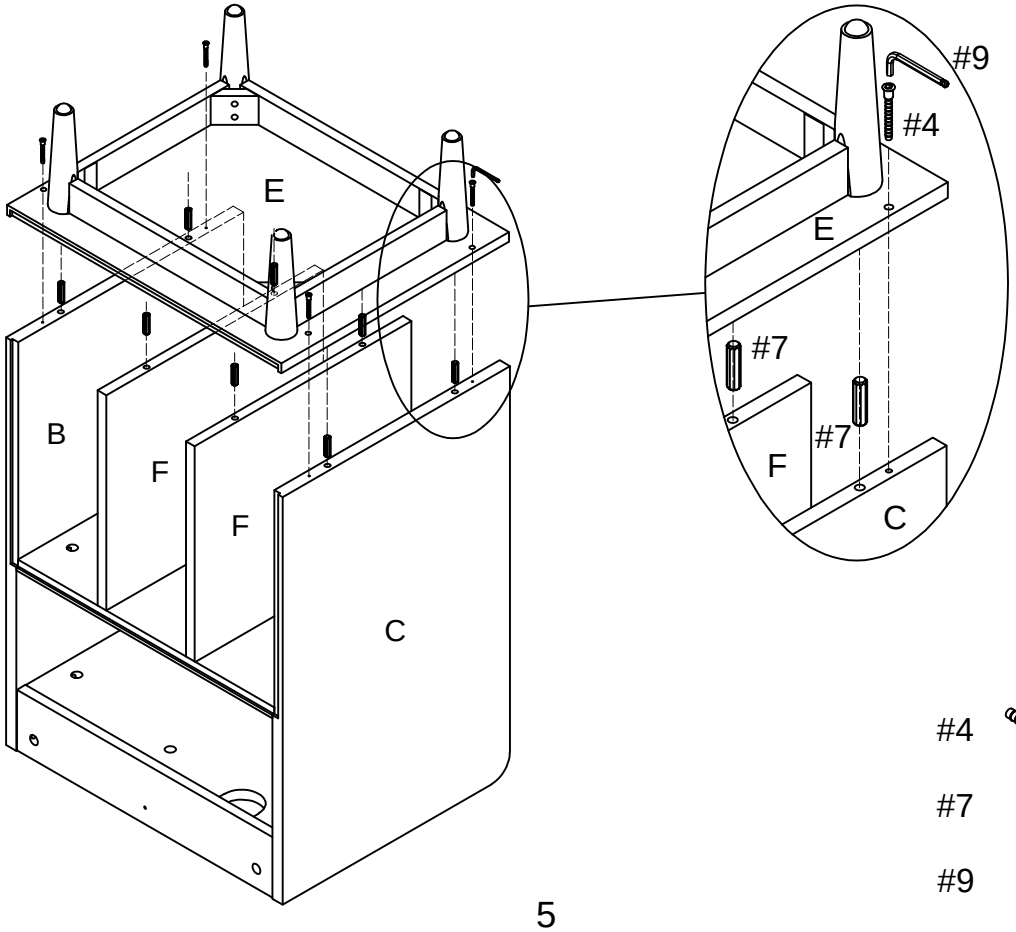

#4 x 4

#7 x 8

#9 x 1

Step 7. Attach lower back panel (part H) to assembled unit (parts B, C, D & E) using screws (part #8) and phillips head screwdriver.

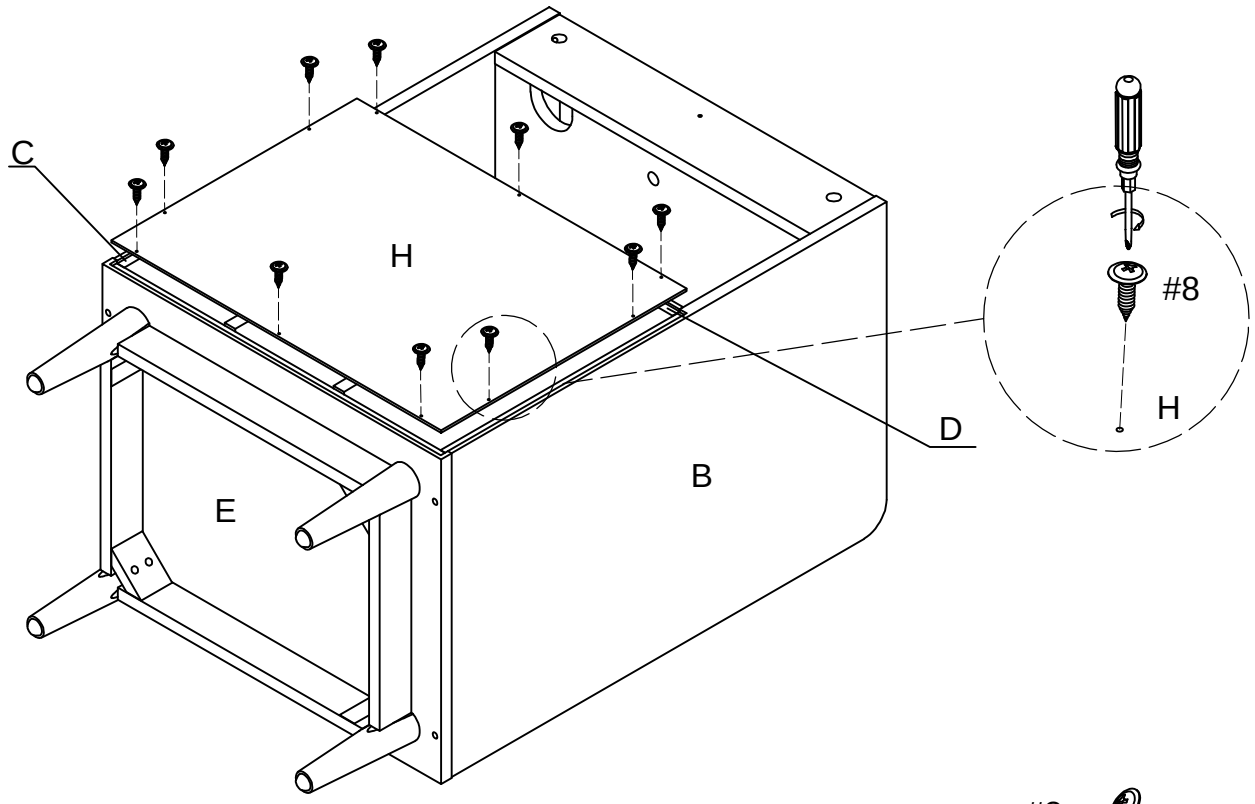

#8 x 10

Step 8. Carefully turn unit upright. Using cam stickers (part #10) cover cam locks (part #6).

NOTE: It is important to adjust levelers once fully assembled and upright. Extend adjustable leveler until it's firmly in contact with the floor. If relocating, adjust leveler as needed until it's firmly in contact with the floor in new location.

Important: Safety strap kit (part #11) must be installed to prevent tipping damage and/or injury.

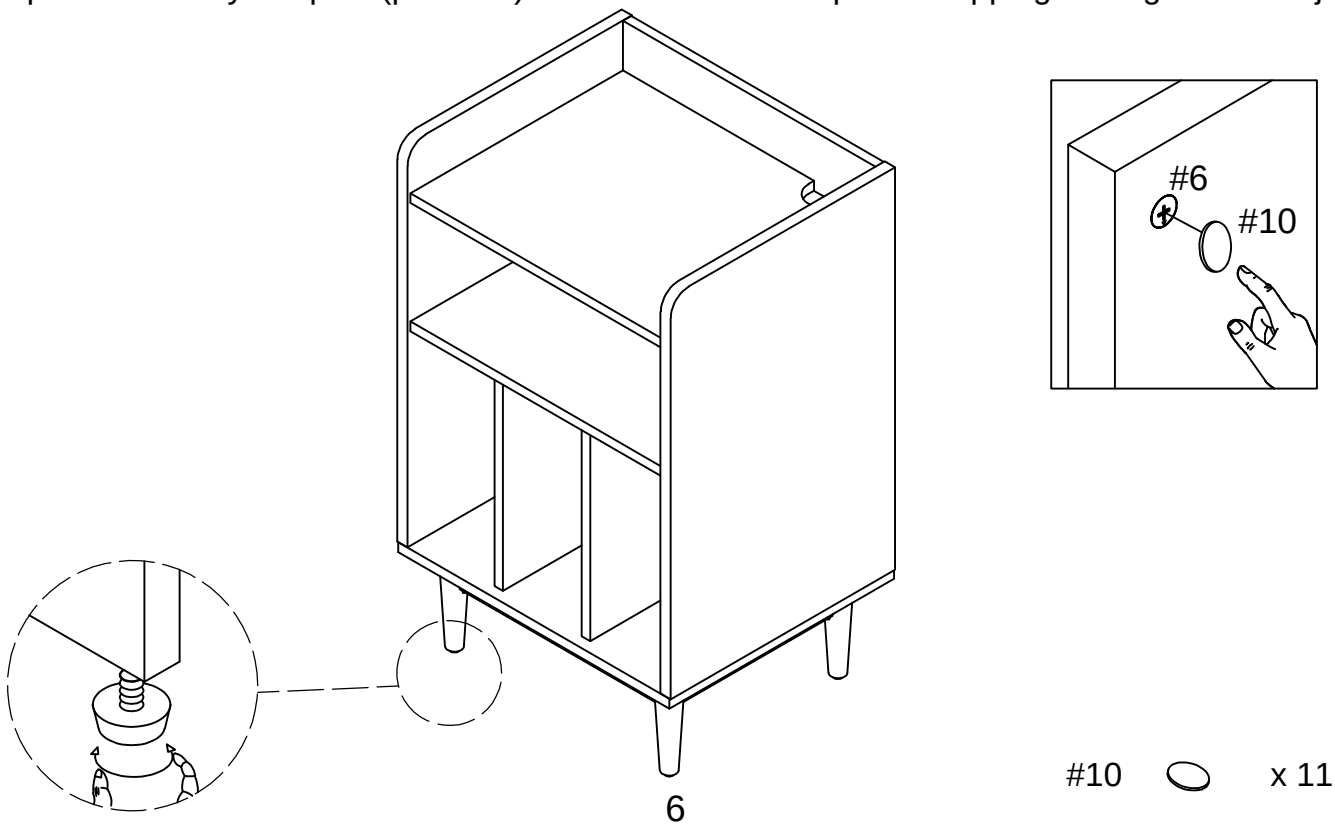

#10 x 11

#11	A	B	C	D	E
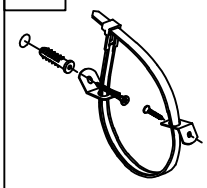			 8*3*15mm	 8*4*35mm	
Safety Strap Kit 1 SET	Wall Anchor 1 PC	Bracket 2 PCS	Short Screw 1 PC	Long Screw 1 PC	Safety Wall Strap 1 PC

SAFETY WALL STRAP INSTALLATION

Note: It is highly recommended to install this safety strap kit to prevent tipping, damage and/or injury.

1. Insert short screw (C) and safety wall strap (E) through bracket (B) and attach to upper back panel (part G) using phillips head screwdriver.
2. Drill a 11/32" hole where you want to secure the unit. The drilled hole will be at the same height as the hole in upper back panel (part G) where bracket (B) is attached. Tap wall anchor (A) into the hole.
3. Insert long screw (D) and safety wall strap (E) through bracket (B) into wall anchor (A) using phillips head screwdriver.
   Note: This item is not intended for clothing storage use.

