Product must fulfil the RoHS-directive
(Directive 2002/95/EY) requirements.

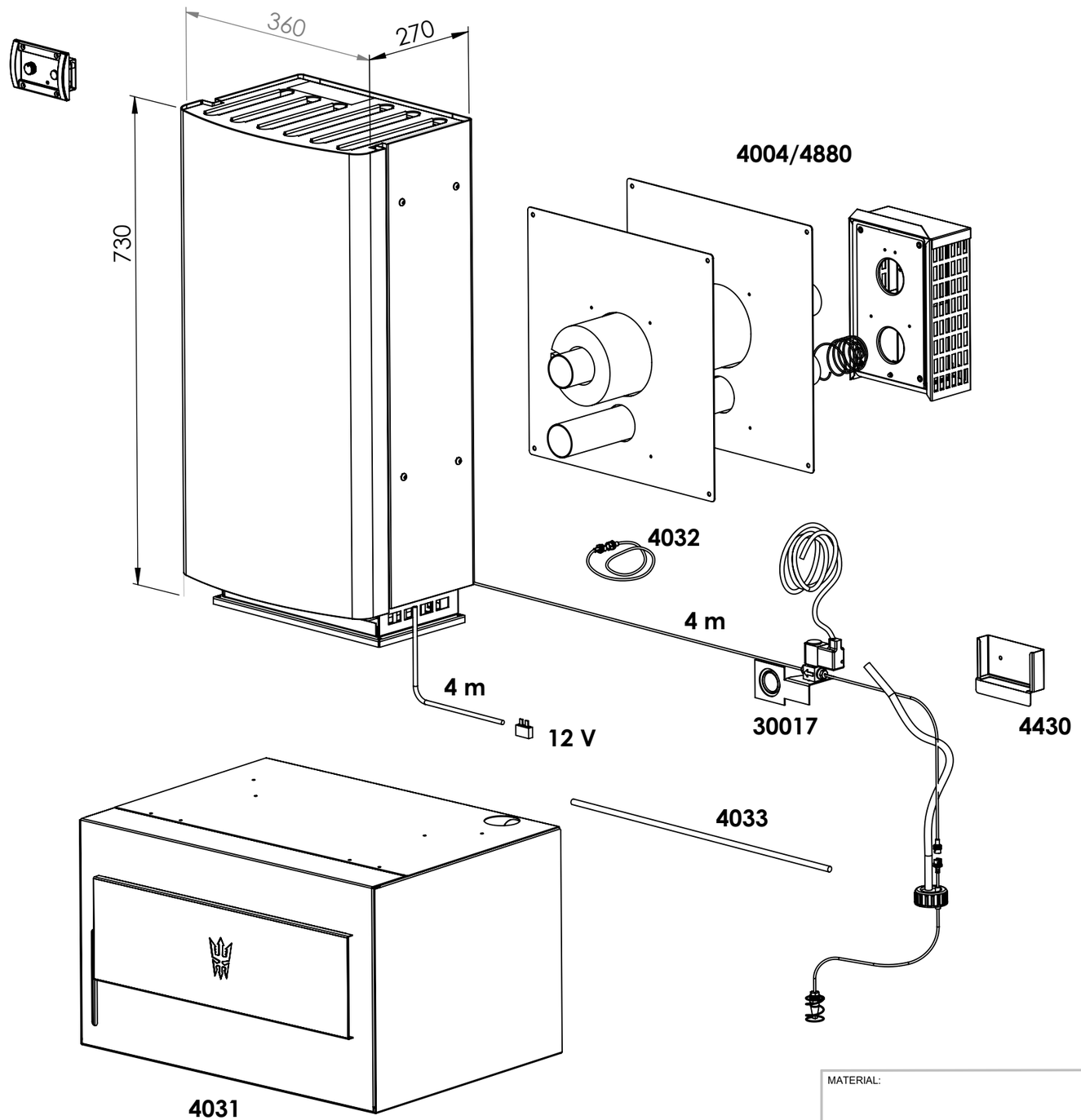


| | | | |
|---|---|---|---|
| MATERIAL: | THICKNESS: S= | FINISH: | WEIGHT g |
| TOLERANCES: General tolerance ISO 2768-m | | NAME 26CC+varusteet | |
| DRAWN Janne | DATE | APPV'D | SHEET 1 OF 1 |
| wallas® | | DWG NO. 26CC + varusteet 2 SCALE:1:20 | CODE / REVISION |

A3