Spartan Water
Viking Water

INSTALLATION, OPERATION AND SERVICE INSTRUCTIONS

2+1 year warranty at: wallas.fi/takuu
Download the latest version of manual at
https://wallas.fi/documents/

Safety - Safety Instructions for water heaters 3
Technical information - Supplies and accessories 4
Technical information - Technical data Spartan & Viking Water 5
Technical information - Operation description 5
Technical information - Things to note before Installation 7
Technical information - System dimensioning quidelines 8
Technical information - Heater system dimensioning 9
Installation - Fastening the devices 11
Installation - General electrical connections 13
Installation - Product specific electrical connections 14
Installation - Coolant connections 16
Installation - Installation example 17
Installation - On-demand hot water accumulator 18
Matrix heaters - Supplies and accessories 19
Matrix heaters - Technical information 21
Matrix heaters - Things to note before Installation 22
Matrix heaters - Heater system dimensioning 23
Matrix heaters - Matrix heater measures and connections 25
Matrix heaters - Device operation 28
Installation - Bleeding and filling system with coolant 29
Installation - Camper/RV installation 30
Exhaust gas connections - Exhaust gas connections coaxial 32
Exhaust gas connections - Closable lead-through 2460 (Viking water only) 33
Exhaust gas connections - Side lead-through 2467 34
Exhaust gas connections - Deck lead-through 5300 35
Exhaust gas connections - Drainage lock 2471 - Water heaters 36
Exhaust gas connections - Stern lead-through 5400 37
Exhaust gas connections - Insulation kit 2461 37
Fuel connections - Fuel connections 38
Fuel connections - Fixed tank connection 30011 39
Fuel connections - Separate tank connection 367200 40
Fuel connections - Solenoid valve 30012 41
Fuel connections - Tank external filters 30015, 30016 42
Fuel connections - Selecting the fuel 43
RV Fuel connections - Tank connection 30018 44
Operation - Device operation 45
Control Panel - Control Panel Installation 48
Control Panel - Basic features for water heaters 49
Control Panel - Connecting with the Remote application 57
Control Panel - Software update 62
Control Panel - Error Codes 63
Important information - Installation check list 65
Important information - Maintenance recommendations for water heaters 67
Important information - Warranty terms 68
Important information - Disclaimers 69

Safety Instructions for water heaters

This manual has information on product safety and instructions to reduce risk of accidents and injuries.

!	This heater (hereinafter also referred as "unit" and "device") is designed and intended for recreational use.
!	We recommend having a Wallas-Marin professional install our products to avoid improper installation that can cause injury or property damage.
!	Installation instructions in this manual and country-specific requirements must be followed.
!	It is the responsibility of the owner and the installer to determine which requirements and standards apply to specific installations.
!	Wallas-Marin offers a 2+1 year/2000 hour warranty. The warranty is not valid if the unit has not been installed according to the manual or the country-specific regulations have not been followed.
!	Do not repair, replace or remove any part of the unit unless specifically recommended in the manual. All other servicing should be done by an authorized Wallas-Marin Distributor or Service Center.
!	This unit is not intended for use by persons (including children) with reduced physical, sensory or mental capabilities (that could affect a safe handling of the product), or lack of experience and knowledge, unless they have been given supervision or instruction concerning use of the appliance by a person responsible for the safety.
!	Before touching the heater, make sure that it is completely cooled down and all the hoses and coolant are below 37 °C / 100 F.
!	Keep the water temperature above 55 °C (131 F). Heat the water once a week to more than 70 °C (158 F).
!	When designing or installing the system, make sure that any possible leakage points (joints, the whole heater, the expansion tank and the hot water accumulator) are installed in such a place that the possible leaks cannot destroy anything.
!	Country specific rules must be followed in engine room compartment installations.
!	As with any carbon-hydrogen combusted product, the vessel should be properly fitted with a CO detector, tested regularly and replaced as per the manufacturer’s schedule. The installer must ensure there is sufficient ventilation into the indoor space for occupants and system operation.
!	Wallas-Marin reserves the right to change or improve its products, and to modify appearances and specifications without notice.

Supplies and accessories

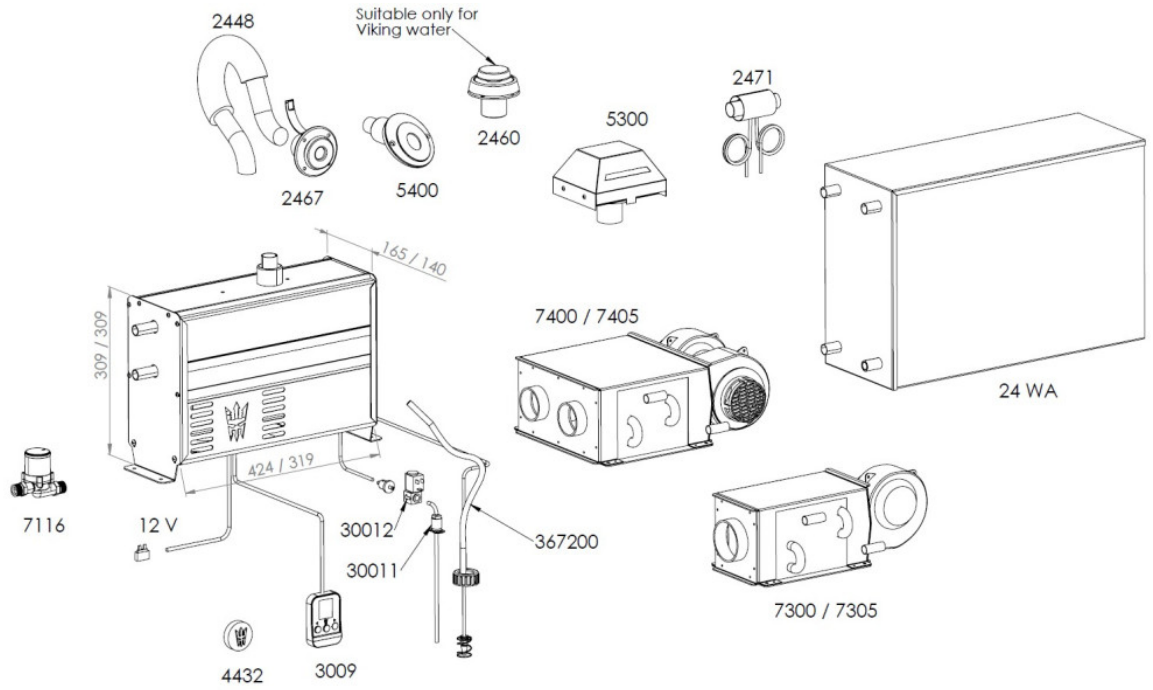

Package contents (Spartan water heater in the picture above)	
Diesel heater (Spartan water **or** Viking water) Fuel hose (4m) Power cable (4m) Control panel	Control panel cable (5m) Wired calorifier temp sensor / cylinderstat Accessory bag

List of supplies and accessories	
2448 Coaxial Exhaust hose, ø 28 / 45 mm **2460** Sealable deck lead through (**Viking water only**) **2467** Coaxial hull exhaust lead-through, ø 28 / 45 mm **2471** Drainage lock **30011** Tank fitting / diesel **30012** Magnetic solenoid valve 12V/0,5 A **367200** Lead through kit for separate tank	**4432** Wireless temperature beacon **5300** Deck lead-through **5400** Stern lead-through, ø 28 / 45 mm **7116** Circulation pump 5W with wire **24 WA** On-demand hot water accumulator **7300** 1,8 kW Matrix Heater **7400** 3,6 kW Matrix Heater

To get more detailed information about the available supplies and accessories please visit wallas.fi > Part search

https://wallas.fi/partsearch/index.php?action=unit&l=101

Technical data Spartan & Viking Water

	Spartan water	Viking water
Fuel	Diesel oil, light furnace oil, HVO-fuel, HVO EN 15940, B10 EN 16734, D20/30 EN 16709	Diesel oil, light furnace oil, HVO-fuel, HVO EN 15940, B10 EN 16734, D20/30 EN 16709
Coolant	50 % glycol / 50 % water Blue/green BS6580 ethylene glycol	50 % glycol / 50 % water Blue/green BS6580 ethylene glycol
Operating voltage	12 V DC	12 V DC
Fuel consumption	0,16 l/h - 0,5 l/h (5,4 - 16,9 oz/h)	0,1 l/h - 0,3 l/h (3,4 - 10,1 oz/h)
Heating power	1,4 kW - 5 kW (4,700 - 17,000 BTU)	0,9 kW - 3,0 kW (3,070 - 10,250 BTU)
Power consumption	0,5 A - 1,2 A (6-7 A during start up, 8 min)	0,6 A - 1,0 A (6-7 A during start up, 8 min)
Dimensions (L x W x H)	424 x 165 x 309 mm (16 11/16" x 6 1/2" x 12 3/16")	319 x 140 x 309 mm (12 9/16" x 5 1/2" x 12 3/16")
Weight	11,0 kg (24 lbs)	8,5 kg (19 lbs)
Maximum permitted length of exhaust pipe	2 m coaxial (2448)	2 m coaxial (2448)
Maximum permitted length of fuel hose	8 m	8 m
Minimum area of the replacement air opening	200 cm²	200 cm²
Water connection	19 mm	19 mm
Radiator system	Radiator system heat loss must be 5,0 kW If heat loss is less than 5,0 kW heater does not work as designed.	Radiator system heat loss must be 3,0 kW If heat loss is less than 3,0 kW heater does not work as designed.
Connections	Solenoid valve Remote control Water pump	Solenoid valve Remote control Water pump
Suitable Exhaust gas lead-throughs	2467, 5300, 5400	2460, 2467, 5300, 5400
Recommended usage temperature	-15 – +30 celsius ***	-15 – +30 celsius ***
ECE-R122 and ECE-R10	E24*10R06/02*4772*00 and E24*10R06/02*4772*00	E24*10R06/02*4772*00 and E24*10R06/02*4772*00

Operation description

Wallas Water heater is designed especially for water circulation heating systems outside of the electricity network.

Light furnace oil, diesel oil or paraffin can be used to fuel the device. The heater is powered by a 12-volt battery, which can be recharged, for example, by a solar cell, wind generator or a mains power adapter.

The combustion air is fed in from outside, the device and its circulation is completely enclosed, and balanced with the flue-gas exhaust head, which eliminates the effect of wind pressure on the combustion.

The heater's evaporation burner is activated automatically when the device is started. The glow plug in the burner ignites the fuel that has been pumped into the burner. The glow time is fixed: it starts and ends automatically.

All functions are controlled electronically. The fuel pump and combustion air blower are fully stabilised against voltage fluctuations, which ensures clean combustion, regardless of changes in the battery voltage.

The heater is equipped with built-in overheat protection, which cuts the fuel feed if the device overheats.

When the heater is switched off, it cools down automatically. The cooling function ventilates the burner, and discharges the flue-gases generated during the switch-off, to outside.

Things to note before Installation

Heater installation

Country specific regulations shall be followed in any installation. The warranty of products is valid only in installations that are done according to this manual. Wallas recommends that the device be installed by an authorized Wallas service shop or professional installer.

Selecting the installation location

The device shall be installed into a dry space in a protected location. The device must be mounted to a solid surface. When installing, please note that the device needs to be removable for servicing. Connections and location should be made so that the device can be easily disconnected for removal.

The heater should be installed vertically level when the boat is on an even keel. The static inclination must not exceed 5°. While the device will tolerate being temporarily tilted to a steep angle (even for some hours), the burner will not yield optimal performance if it is constantly inclined.

Select the place of installation to allow a minimum amount of bending in the hoses / ducting. Avoid installing the heater and control panel in the immediate vicinity of any potential water intrusion. If possible, install the control panel on a vertical surface.

In case of water entering the exhaust hose from outside, the heater can be damaged. Water in the exhaust hose might suffocate the heater, leading to toxic gasses.

Installation of pipes, hoses and cables

Power cables, water and fuel hoses must be protected in locations where they are susceptible to mechanical damage due to sharp edges or heat. All cables and hoses should have a fluid precluding "drip loop" to prevent water or other fluids from following wires or hoses to the heater. Ensure that the cable connections are not strained.

The exhaust hoses are hot. The exhaust hose can be partially insulated, check instructions from check list.

Installation of valves

A separate mixing valve must be installed to the hot water line if Wallas on-demand hot water accumulator is used because Wallas on-demand hot water accumulator doesn't have a mixing valve built-in.

Installation space

The device can be installed within the heated space or outside of it. The device should be protected from rain and splash water.

It's forbidden to install the heater to a space which may contain gasoline fumes! This may lead to unwanted heater operation, or sudden combustion.

!	When designing or installing the system, make sure that any possible leakage points (joints, the whole heater and the expansion tank) are installed in such a place that the possible leaks cannot destroy anything. It is recommended to build a spill reservoir which can hold the coolant used in the system.

Following sections of manual are presenting important basic installation information but if you have any questions please be free to contact purchasing/local distributor point for more information.

System dimensioning quidelines

The start of a Spartan Water heater creates during its first 10 minutes 2400 kJ energy. This means that the coolant system needs to absorb the same amount of energy. The heater will automatically stop (pause) when the coolant is over the target by 10 °C (22 F) and start again (from pause) when the temperature is 15 °C below the target. This 25 °C difference needs to "fit" to the coolant system. This means that the minimum coolant volume is 30 liter for Spartan Water.

The coolant will expand in the system. Wallas 7120 expansion tank has capacity of 3 l. The expansion factor of the coolant is ~5%. Thus the minimum required expansion tank volume (when having the miminum coolant volume mentioned above) for Spartan is 1,5 l.

If there is 100 l coolant in the system, the 5 l expansion tank is required, or 3 l daytank connected to the 7120 Wallas expansion tank's splill bleed.

The hoses in the system are ø 19 mm (3/4") so there is ~ 3 dl coolant in 1 m (3 feet) hose.

The minimum required values for the system dimensioning can be found from the table below.

Dimensioning quidelines	Spartan Water	Viking Water
Heating power in start up	4000 W	1500 W
Created energy in start up	2400 kJ	900 kJ
Minimum coolant volume	30 l	11 l
Expansion tank (minimum)	1,5 l	0,5 l
Coolant hose need		
Without buffer tank	110 m	40 m
With Wallas 16 l accumulator	54 m	no extra hose needed
With Wallas 24 l accumulator	25 m	no extra hose needed
Buffer tank size		
10 m water hose	27 l	8 l
25 m water hose	23 l	4 l
40 m water hose	19 l	0 l
50 m water hose	16 l	-
110 m water hose	0 l	-

For more detailed information please contact the local Wallas distributor or Wallas sales.

Heater system dimensioning

Matrix heater and/or radiator size calculations

The following input data are needed for dimensioning the appropriate matrix heater

- dimensions of the space to be heated (m or ft)
- intended use (type) of the space (salon, sleeping etc.)

Calculation A (resulting W) Formula: L x W x H x 0,8 x Factor A = _____ W	
L W H 0,8	Length of the space (m) Width of the space (m) Height of the space (m) Adjustment factor
Factor A selection table	
80 100 120 150	Small spaces like heads or working rooms Sleeping spaces All other spaces High use spaces like salon
Example: A space 4 m long, 3 m wide and 2 m high that is a salon (high use) would require 4 x 3 x 2 x 0,8 x 150 = 2 880 W matrix heater or radiator	

Calculation B (resulting BTU) Formula: L x W x H x 0,8 x Factor B = _____ BTU/h	
L W H 0,8	Length of the space (ft) Width of the space (ft) Height of the space (ft) Adjustment factor
Factor B selection table	
8 10 12 15	Small spaces like heads or working rooms Sleeping spaces All other spaces High use spaces like salon
Example: A space 10 feet long, 12 feet wide and 6,5 feet high that is a salon (high use) would require 10 x 12 x 6,5 x 0,8 x 15 = 9 360 BTU/h matrix heater or radiator	

Example matrix (m^3 / Factor A / W)

Space	Factor A			
m^3	80	100	120	150
10	640	800	960	1 200
20	1 280	1 600	1 920	2 400
50	3 200	4 000	4 800	6 000
100	6 400	8 000	9 600	12 000

Example matrix (ft^3 / Factor B / BTU/h)

Space	Factor B			
ft^3	8	10	12	15
350	2 240	2 800	3 360	4 200
700	4 480	5 600	6 720	8 400
1600	10 240	12 800	15 360	19 200
3600	23 040	28 800	34 560	43 200

For more detailed information please contact the local Wallas distributor or Wallas sales.

!	**Do not over radiate the system.**

If the temperature of the coolant does not rise to the target temperature, the built coolant system is over radiating. This means that there is a risk of condensation in the burner. Condensation water may cause soot and caulking into the burner / heat exchanger.

Signs of the over radiation:

- Coolant never reaches the target temperature and the heater power has remained 100%. E.g. target 55 °C coolant temperature have raised to 45 °C but does not rise from that.
- Exhaust lead through drips water

Causes for over radiating:

- Too many heating elements in the heating system drawing too much thermal energy from the coolant, for example too many Matrix heater or radiators
- Some component is loosing heat, for example coolant hose running against cold hull

Choosing the right Matrix heater and other heating elements

Heating elements' combined output should never exceed the heater's nominal heating output by a factor of 1,2x. For example, 3 kW VikingWater can have 2 x 1,8 kW Matrix heater. Overradiating is partially prevented with the software's temperature limit. The Matrix heaters won't start if the coolant is under 40 °C.

Fastening the devices

Floor mounting

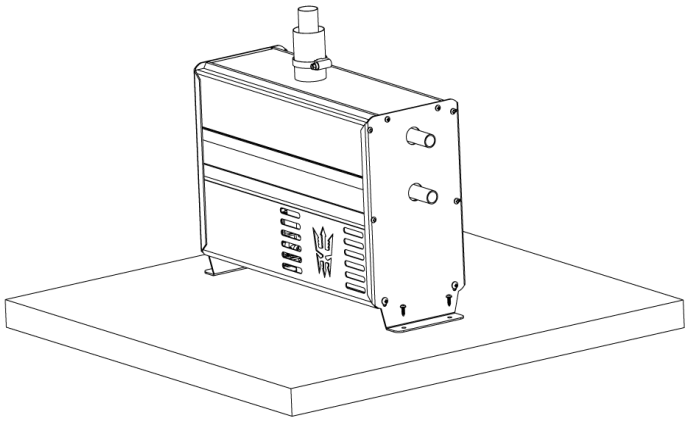

The heater can be installed to the floor by using "legs". Secure the device to a flat stable surface which is not tilted more than 5 degrees from the horizontal plane. While the device might not break if it is temporarily tilted to a steep angle (even for some hours) the burner will not yield optimal performance if it is constantly inclined. The "legs" and necessary screws can be found from the accessory bag.

The heater (Spartan water or Viking water) must be well fastened to withstand heeling of vessel in all directions.

.

Ensure that there is enough space for the exhaust hose installation above the heater.

Dimensions Spartan water

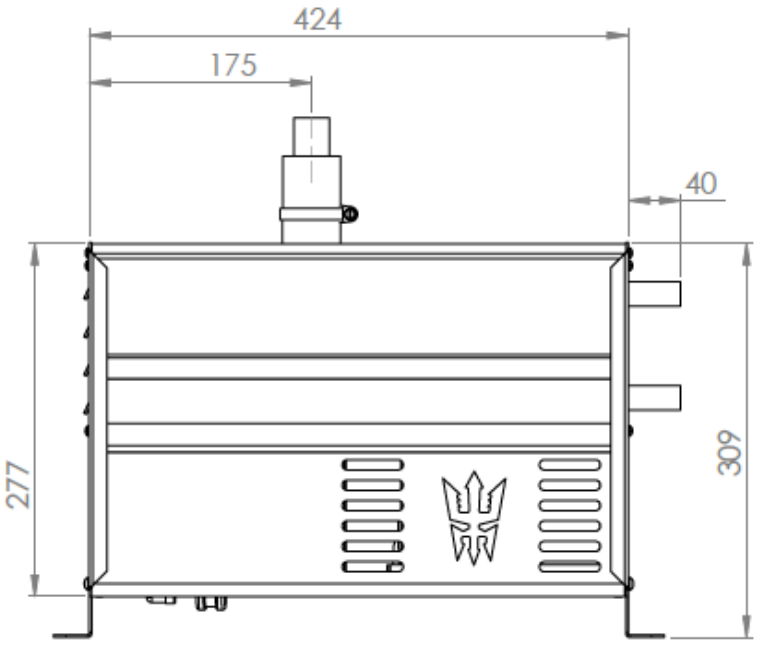

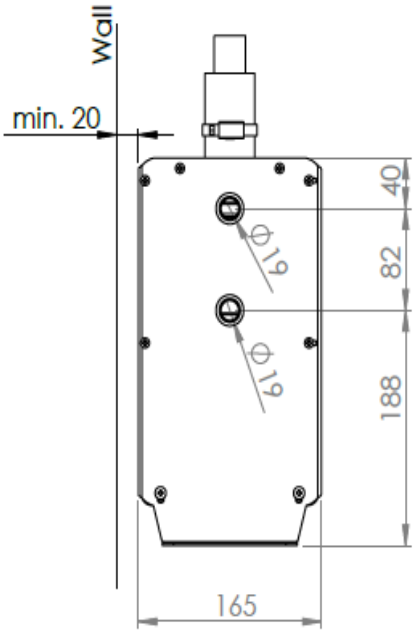

Dimensions Viking water

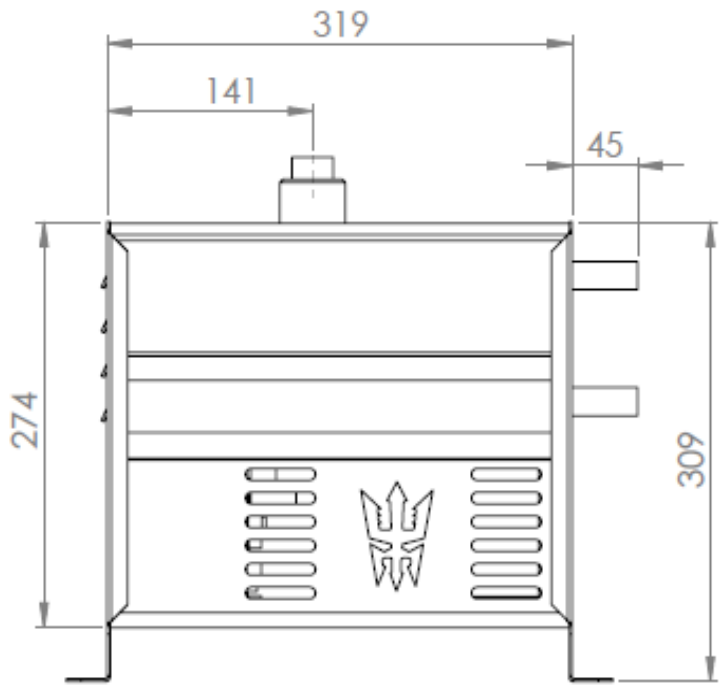

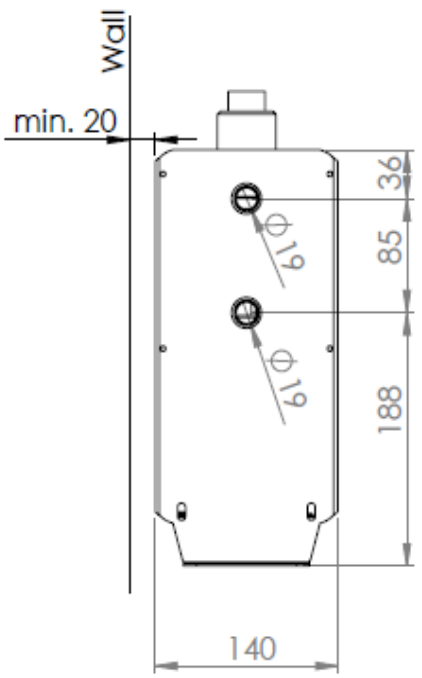

General electrical connections

Safety instructions for wiring the heater	
!	Make sure that electrical cables are not damaged. Avoid: chafing, kinking, jamming or exposure to heat. Electrical connections and ground connections must be free of corrosion and firmly connected.

Things to note about the connections

All connections must be arranged in the craft so that they can function perfectly under normal operating conditions. Insulate unused cable ends.

The device uses 12 V (nominal) direct current voltage. To minimize current losses, make the power cable as short as possible and avoid joining. The cross-sectional area of the cable is dependent on the length of the power cords. The cross-sectional area of the cable should be consistent all the way from the device to the battery. The maximum length of the power cord is 10 m, based on 6 AWG cable.

The cross-sectional area of the cable	
Total length of the power cord (m)	**Minimum cross-sectional area of the cable in square mm (US Gauge)**
0-4	2,5 (13 or 12 AWG)
4-6	6 (9 or 8 AWG)
6-10	10 (7 or 6 AWG)
If a thicker cable is required, make a separate joint in the power cord. See picture "Electrical connections of the device".	

!	**In metal-hulled boat,** you must ensure that the device, the flue gas lead-through, the fuel connection, the control panel and all other parts are insulated from the boat's hull. This must be done to prevent electrochemical corrosion and to prevent voltage from being transmitted from the hull to the device or vice versa during electrical faults.

Product specific electrical connections

Electrical connections from power system

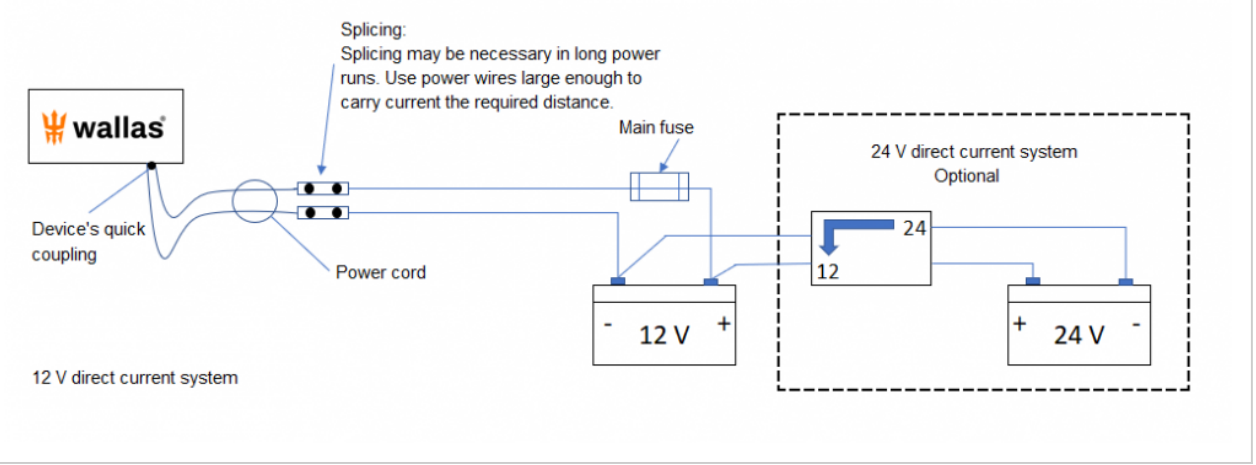

12 V direct current system

Connect the red wire of the power cord to the plus terminal of the battery and the black or blue wire to the minus terminal. A 15 A main fuse must be installed near the battery on the red plus wire of the power cord. See picture above.

24 V direct current system

If the device is to receive power from a 24 V system, always connect a charging voltage reducer through a 12 V battery before connecting the device as shown above.

Without the battery most voltage reducers will not be enough to generate the large amount of current the glow plug requires.

After the 12 V battery, the connection is the same as in a 12 V system. Note, if using remote wire, the remote wire also needs connection to 12V, not 24V.

For DC DC 24/12 converter ask recommendation from your local dealer. There are major differences between them, but typically a converter rated for 25A is required.

Checking the connection

The device consumes the most power when it is starting (glow on). At this time, voltagedrop is at it's highest. During the glowing phase, the voltage must not fall below 11 V measured at the quick coupling. See picture above. If the voltage is lower than this, the device may not start.

All wires should to be mounted with smooth bending and equipped with strain relief.

Connection points of the device

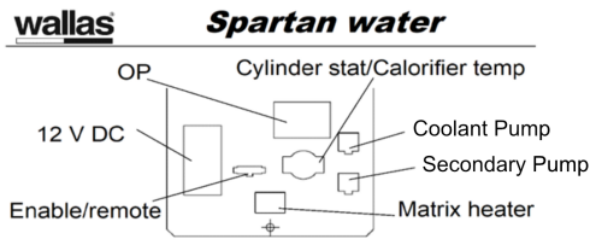

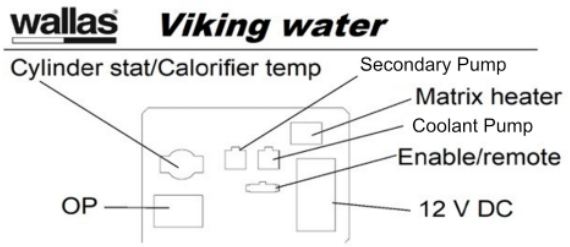

OP	Control panel	**OP**	Control panel
12 V DC	Power cable	**12 V DC**	Power cable
Secondary Pump	Secondary water pump	**Secondary pump**	Secondary water pump
Matrix heater	Control wire for Matrix heater	**Matrix heater**	Control wire for Matrix heater
Enable/remote	Remote wire (optional)	**Enable/remote**	Remote wire (optional)
Coolant Pump	Coolant pump	**Coolant pump**	Coolant pump
Cylinder stat	Thermometer to calorifier	**Cylinder stat**	Thermometer to calorifier

Connection alternatives (optional)



A wireless thermo sensor (4432) can be connected to the heater. The wireless thermostat is the most accurate sensor and portable.

If the heater does not have any sensors connected, then room temperature monitoring is not available.

Power loss sensing & shutdown
If the heater is needed to be protected from the accidental main switch cutoff while unit is still running it can be done following way.

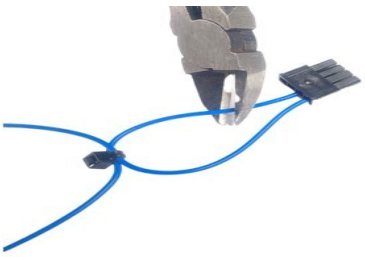

Locate the blue Enable wire loop what is connected to bottom of the heater.
Cut the 2nd wire nearby connector and connect it to main switch +12V pole.

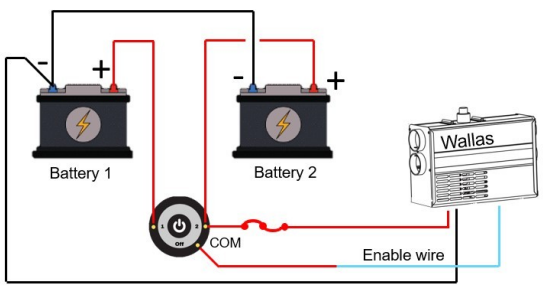

The blue wire should connect to the red +12V lead coming from the controlled side of the boat's main battery switch.

If the main boat switch is opened (turned off) while the heater is running, the heater will initiate a controlled or "normal" shutdown. Re-closing the main battery switch will not re-start the heater. Re-start must be initiated by the user at the panel or via mobile device from Wallas Remote application.

Coolant connections

All water heating components must be installed in safe locations, where they do not cause any scalding or damage to people, animals, or surrounding materials due to excessive heat. Especially metal joints can get as hot as the coolant (max +85 °C) and can cause damage if they are positioned too close to less heat-resistant materials.

Before doing any installation or service work for the heater or water system, shut down the heater and let the system cool down to prevent possible injury or burns.

!	**When choosing the installation location, it should be noted that in the event of a possible leak, the leaking water will not enter the boat/vehicle/building structures. There must be an overflow basin or an outlet pipe in the installation space of the device.**
!	**Spring clamp must be used in every hose barb connection.**

Make sure that the flow direction is correct in your installation.
Route all the coolant hoses so that they are rising from the lowest point to higher. This will prevent air locks from the system.
Follow the hose manufacturer's bending radius recommendations to prevent clogging or kinking.
Make sure that the coolant hoses are far enough from the hot places such as engine/stoves/heaters/fireplaces.
Coolant ducting and fuel hoses must be protected in locations where they are susceptible to mechanical damage due to sharp edges, chafing or heat.
Double check all the hose clamps and joints to prevent any leakages.
Make sure that the temperature difference between the inlet and outlet of the coolant is approximately 10 Celsius. This ensures that the water flow through the whole system is sufficient.

The heater is designed to be used with the open header tank. The system should not be pressurized. The maximum pressure of the system is 0,5 bar.
To prevent corrosion and freezing, the system has to contain enough antifreeze/coolant liquid following the coolant manufacturer's recommendations.
Before first start up, or after liquid change, it is important to bleed the coolant system of air. If the system is not free of air, the system will not work as designed.
When choosing the size of a header tank make sure that volume of the tank is large enough. In coolant systems using 19 mm hose, for every 10 m of hose, a 64 °C temperature change will change coolant volume by 4 cl. In coolant systems using 21 mm hose, for every 10 m of hose, a 64 °C temperature change will change coolant volume by 5 cl.

Maximum height difference for Wallas (7116) 5W circulation pump is 1,4 m and it will pump max 8.5 l/min.

Maximum height difference for Wallas (7117) 15W circulation pump is 3,2 m and it will pump max 12,6 l/min.

Water pump installation

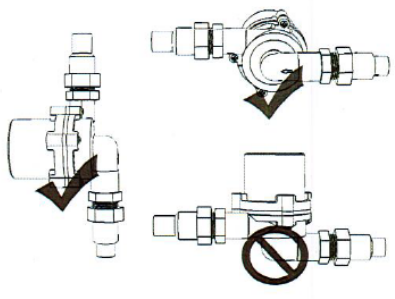	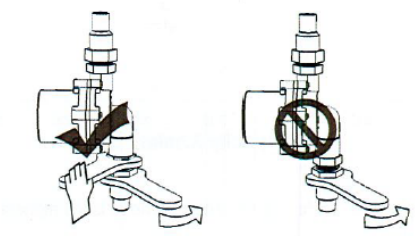	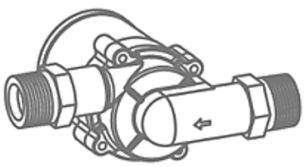
The water pump must be installed horizontally.	When tightening the connector, use two 21 mm wrench, ViceGrip® or equivalent to tighten the joint.	Arrow printed to the side of the pump indicates the flow direction.

Installation example

Water/coolant installation example (Wallas on-demand hot water accumulator)

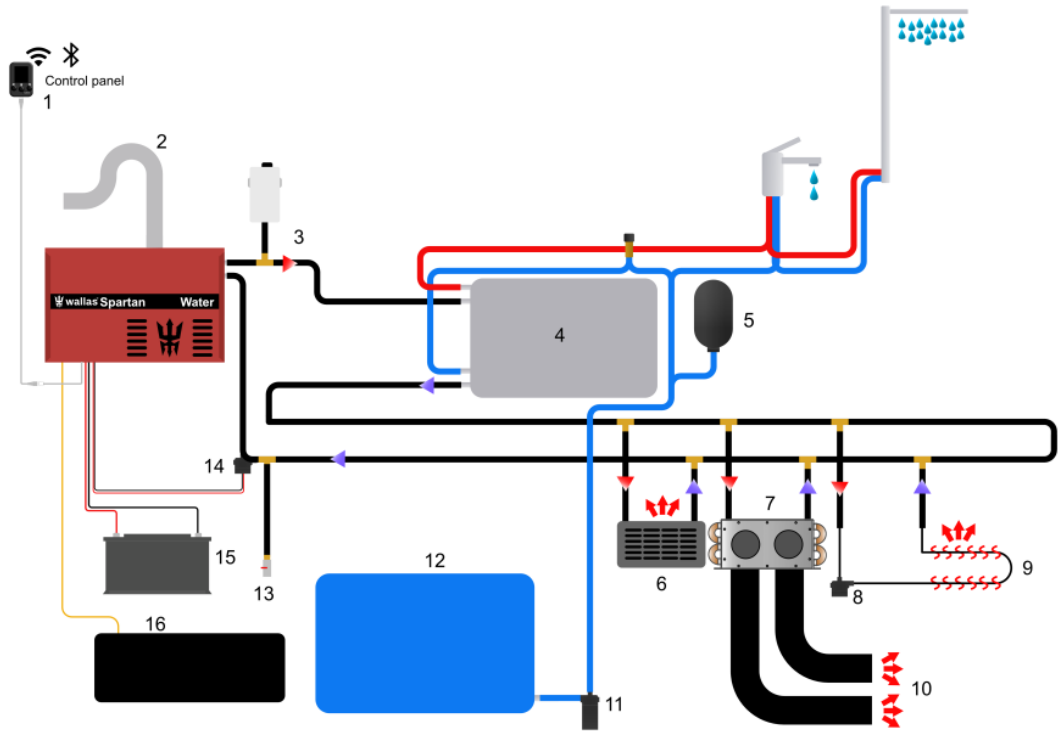

1. Control panel
2. Exhaust pipe
3. Coolant circuit 19 mm
4. Hot water accumulator
5. Accumulator tank
6. Radiator
7. Matrix heater
8. Secondary water pump
9. Under floor heating
10. Warm air ducts
11. Fresh water pump
12. Fresh water tank
13. Filling valve
14. Coolant pump
15. 12V battery
16. Fuel tank

On-demand hot water accumulator

There are two different sizes of Wallas hot water accumulators available; 17 liters and 25 liters. It is recommended to use Wallas on-demand hot water accumulators for optimal performance with the Spartan water or Viking water installations.

Hot water accumulator connections		
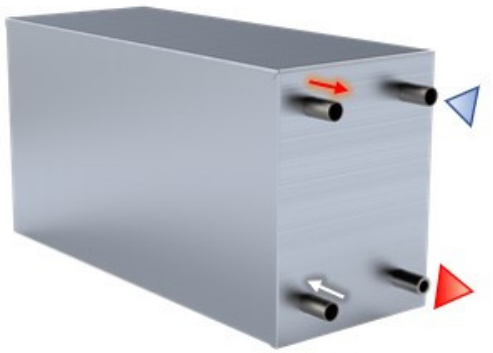	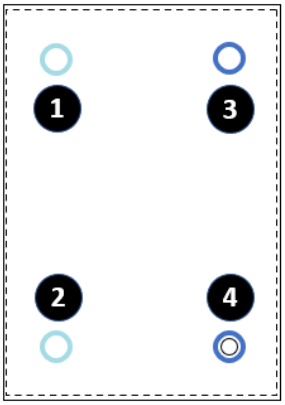	1. Warm water outlet 2. Cold water inlet 3. Coolant inlet 4. Coolant outlet (can be recognized from the double pipe) The pictures attached are not to actual scale.

Hot water accumulator can be chosen and installed to the fresh water system. Follow the hot water accumulator instructions to ensure proper installation method.

If typical hot water tank / calorifier is used consult the manufacturer's instructions.

!	**Mixing valve must be installed if Wallas on-demand hot water accumulator is used.**
!	**Do not use the warm water coming through the tank as drinking water.**
!	If the water heater has not been used for more than a month, heat the water to over 70 °C (158 F) for at least two hours and run the water.
!	Fresh water maximum usage pressure is 3 bar. **Do not attach to general water supply network without pressure reduser.**

Wallas on demand hot water accumulators

Volume (total)	Volume (water)	L x W x H	Hose connector pipe lenght	Code
17 l	1,1 l	539 x 204 x 270 mm	31 mm	16WA
25 l	2,4 l	578 x 208 x 367 mm	33 mm	24WA

Supplies and accessories

Heaters with ø 60 mm outlets	Heaters with ø 75 mm outlets
7305 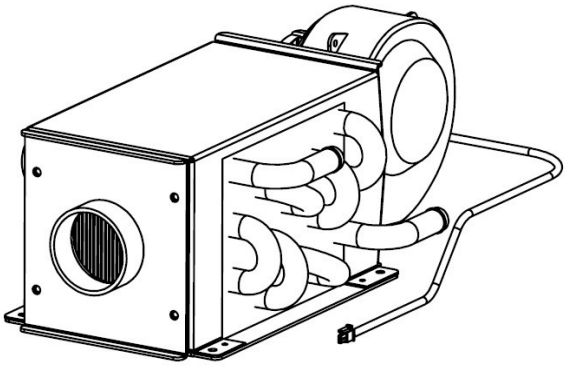 **7405** 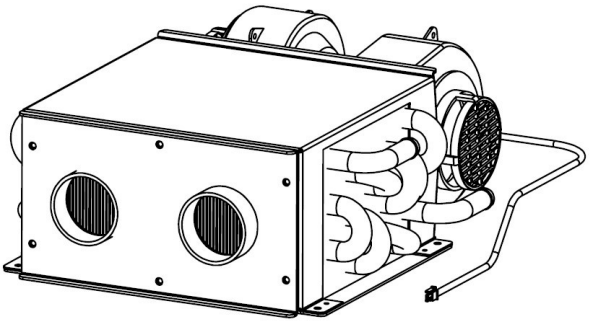	**7300** 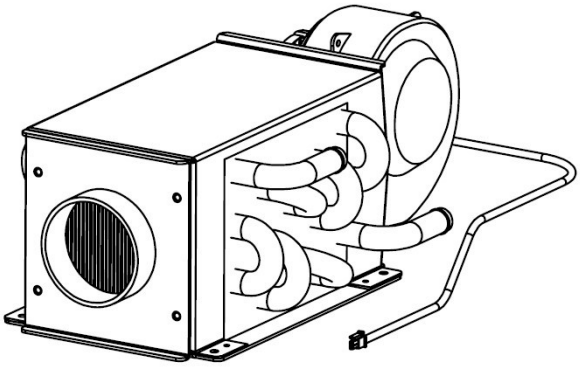 **7400** 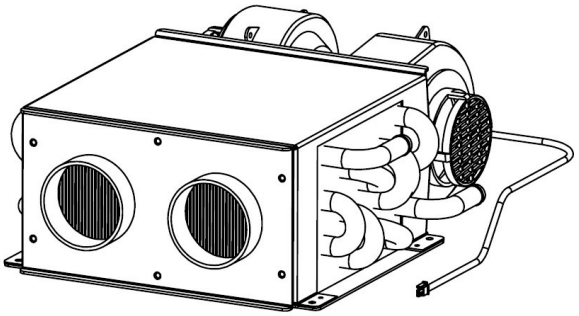

Package contents

1 pc Matrix heater (7300, 7305, 7400 **or** 7405) with power cable
1 pc Extension cable 4 meters

List of supplies and accessories

Accessories for 7305 & 7405	Accessories for 7300 & 7400
3760 RV Water heater sys. installation kit ø 60 mm **3730** Basic Installation kit, Water heater **7119** Waterhose 19 mm EPDM fiber reinforced **7120** Expansion tank **7126** 19 mm coolant feed/empty valve **7127** 1/12" female conn. w/ 19mm hose barb **7319** 19 mm hose clamp **7519** 19 mm T-joint **2410** Warm air duct ø 60 mm **2411** Warm air ventilation grill ø 60 mm **2448** Exhaust tube ø 28/45 mm inox **2468** Coaxial bulkhead lead-through **30018** Tank connection standard **7319** 19 mm hose clamp **7719** 19 mm silicone hose	**3775** Boat Water heater installation kit 75 mm **3730** Basic Installation kit, Water heater **7119** Waterhose 19 mm EPDM fiber reinforced **7120** Expansion tank **7126** 19 mm coolant feed/empty valve **7127** 1/12" female conn. w/ 19mm hose barb **7319** 19 mm hose clamp **7519** 19 mm T-joint **2448** Exhaust tube ø 28/45 mm inox **2467** Coaxial hull lead-through **30011** Tank fitting / diesel **3410** Warm air duct ø 75 mm **3411** Warm air ventilation grill ø 75 mm **7319** 19 mm hose clamp **7719** 19 mm silicone hose

2410 Warm air duct ø 60 mm **2411** Warm air ventilation grill ø 60 mm **2417** Bulkhead lead through ø 60 mm **2418** Duct extension ø 60 mm **2419** Insulated warm air duct ø 60 mm **2441** Warm air ventilation grill ø 60 mm white **2448** Exhaust tube ø 28/45 mm inox **2468** Coaxial bulkhead lead-through **30018** Tank connection standard **4414** Duct adapter ø 60/75 mm **4416** Duct adapter ø 60/75 mm **7119** Waterhose 19 mm EPDM fiber reinforced **7120** Expansion tank **7126** 19 mm coolant feed/empty valve **7127** 1/12" female conn. w/ 19mm hose barb **7302** 2 x 60 mm end plate for 1,8kw matrix **7319** 19 mm hose clamp **7519** 19 mm T-joint **7719** 19 mm silicone hose	**3410** Warm air duct ø 75 mm **3411** Warm air ventilation grill ø 75 mm **3413** Warm air 3-way divider ø 75 mm **3414** Duct adapter ø 75/90 mm **3416** Silencer ø 75 mm **3417** Bulkhead lead through ø 75 mm **3418** Duct extension ø 75 mm **3419** Insulated warm air duct ø 75 mm **3441** Warm air ventilation grill ø 75 mm white **4414** Duct adapter ø 60/75 mm **4416** Duct adapter ø 60/75 mm **7319** 19 mm hose clamp **7719** 19 mm silicone hose

To get more detailed information about the available supplies and accessories please visit wallas.fi > Part search

https://wallas.fi/partsearch/index.php?action=unit&l=101

Technical information

Matrix heater	7300	7400
Output	1800 W	3600 W
Air flow min/max (m³/h)	14 / 222	22 / 353
Current / Power consumption min/max	0,04 /2,3 A and 0,5 /27,5 W	0,1 / 5,5 A and 1,2 / 66 W
Dimensions (L x W x H)	420 x 215 x 138 mm (16 17/32" x 8 15/32" x 5 7/16")	420 x 330 x 138 mm (16 17/32" x 12 63/64" x 5 7/16")
Weight	3,2 kg / 7,0 lb.	5,2 kg / 11,4 lb.
Pipe connections	19 mm	19 mm

Due to physical laws of thermodynamics, Wallas-Marin announces measured values with 10 % tolerance.

Things to note before Installation

Heater installation

Country specific regulations shall be followed in any installation. The warranty of products is valid only in installations that are done according to this manual. Wallas recommends that the device be installed by an authorized Wallas service shop or professional installer.

Selecting the installation location

The device shall be installed into a dry space in a protected location. The device must be mounted to a solid surface. When installing, please note that the device needs to be removable for servicing. Connections and location should be made so that the device can be easily disconnected for removal.

The device shall be installed in a place where water can not enter the ventilation fan or other components. The ventilation fan must also be protected any other objects from entering.

The installation space must have sufficient air replacement for the ventilation fan air flow.

Select the place of installation to allow a minimum amount of bending in the hoses / ducting.

Installation of pipes, hoses and cables

Power cables and coolant hoses must be protected in locations where they are susceptible to mechanical damage due to sharp edges or heat. All cables and hoses should have a fluid precluding "drip loop" to prevent water or other fluids from following wires or hoses to the device. Ensure that the cable connections are not strained.

It's forbidden to install the heater to a space which may contain gasoline fumes!

!	When designing or installing the system, make sure that any possible leakage points (joints, the whole heater and the expansion tank) are installed in such a place that the possible leaks cannot destroy anything. It is recommended to build a spill reservoir which can hold the coolant used in the system.

Following sections of manual are presenting important basic installation information but if you have any questions please be free to contact purchasing/local distributor point for more information.

Heater system dimensioning

Matrix heater and/or radiator size calculations

The following input data are needed for dimensioning the appropriate matrix heater

- dimensions of the space to be heated (m or ft)
- intended use (type) of the space (salon, sleeping etc.)

Calculation A (resulting W) Formula: L x W x H x 0,8 x Factor A = _____ W	
L W H 0,8	Length of the space (m) Width of the space (m) Height of the space (m) Adjustment factor
Factor A selection table	
80 100 120 150	Small spaces like heads or working rooms Sleeping spaces All other spaces High use spaces like salon
Example: A space 4 m long, 3 m wide and 2 m high that is a salon (high use) would require 4 x 3 x 2 x 0,8 x 150 = 2 880 W matrix heater or radiator	

Calculation B (resulting BTU) Formula: L x W x H x 0,8 x Factor B = _____ BTU/h	
L W H 0,8	Length of the space (ft) Width of the space (ft) Height of the space (ft) Adjustment factor
Factor B selection table	
8 10 12 15	Small spaces like heads or working rooms Sleeping spaces All other spaces High use spaces like salon
Example: A space 10 feet long, 12 feet wide and 6,5 feet high that is a salon (high use) would require 10 x 12 x 6,5 x 0,8 x 15 = 9 360 BTU/h matrix heater or radiator	

Example matrix (m^3 / Factor A / W)

Space	Factor A			
m^3	80	100	120	150
10	640	800	960	1 200
20	1 280	1 600	1 920	2 400
50	3 200	4 000	4 800	6 000
100	6 400	8 000	9 600	12 000

Example matrix (ft^3 / Factor B / BTU/h)

Space	Factor B			
ft^3	8	10	12	15
350	2 240	2 800	3 360	4 200
700	4 480	5 600	6 720	8 400
1600	10 240	12 800	15 360	19 200
3600	23 040	28 800	34 560	43 200

For more detailed information please contact the local Wallas distributor or Wallas sales.

!	**Do not over radiate the system.**

If the temperature of the coolant does not rise to the target temperature, the built coolant system is over radiating. This means that there is a risk of condensation in the burner. Condensation water may cause soot and caulking into the burner / heat exchanger.

Signs of the over radiation:

- Coolant never reaches the target temperature and the heater power has remained 100%. E.g. target 55 °C coolant temperature have raised to 45 °C but does not rise from that.
- Exhaust leadthrough drips water

Matrix heater measures and connections

There are two different sizes of Wallas matrix heaters available; 1800 W and 3600 W.

1800 W matrix heater (7300)

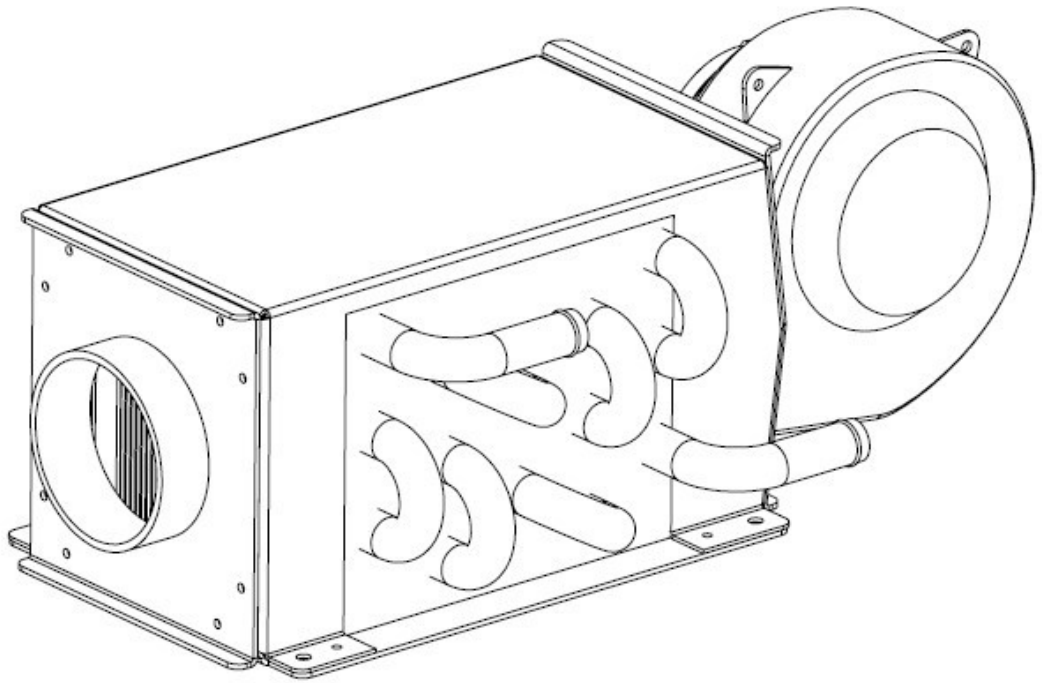

1800 W matrix heater measures (7300)

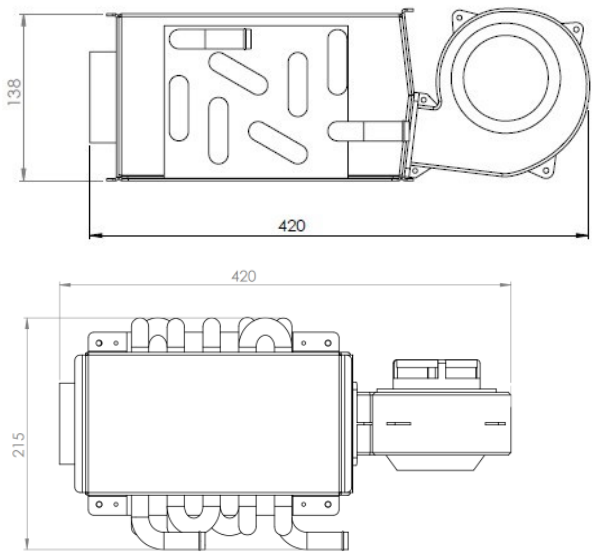

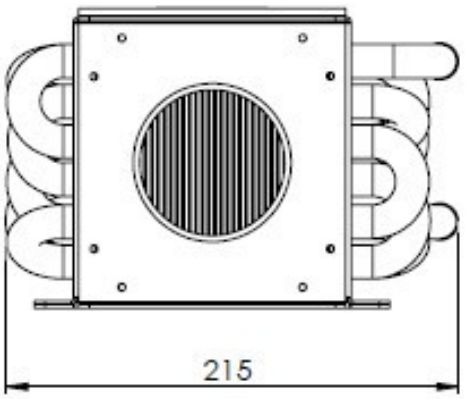

3600 W matrix heater (7400)

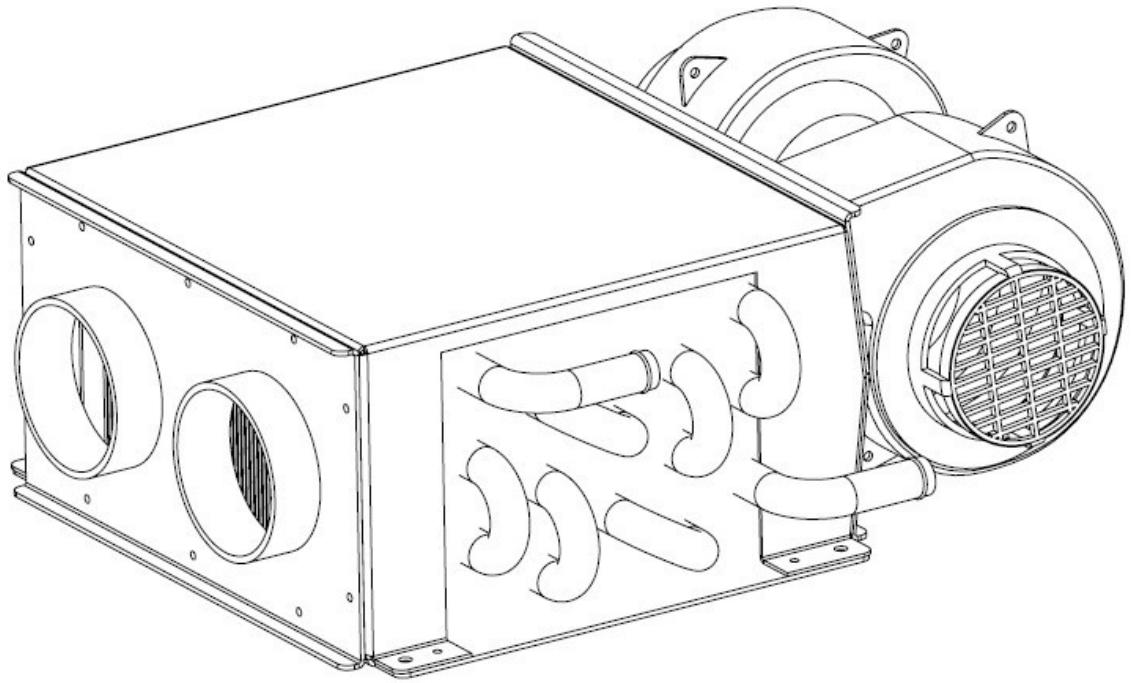

3600 W matrix heater measures (7400)

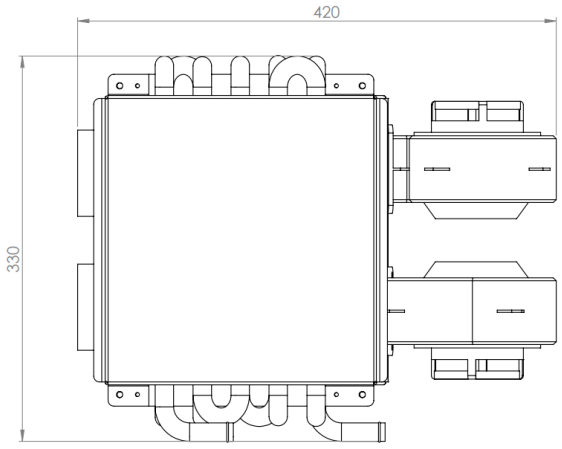

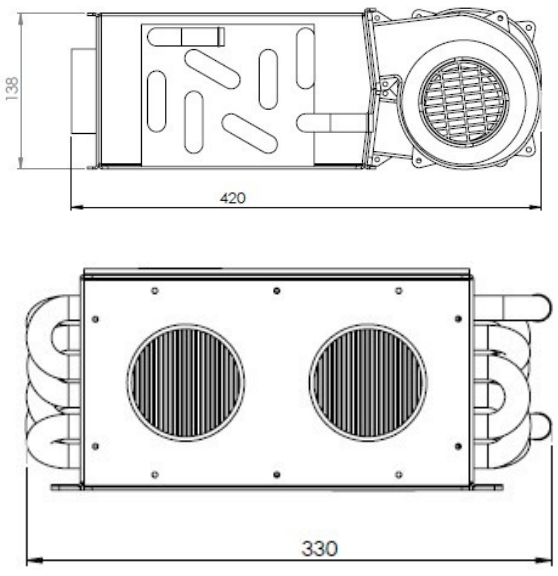

Matrix heater in the water system installation

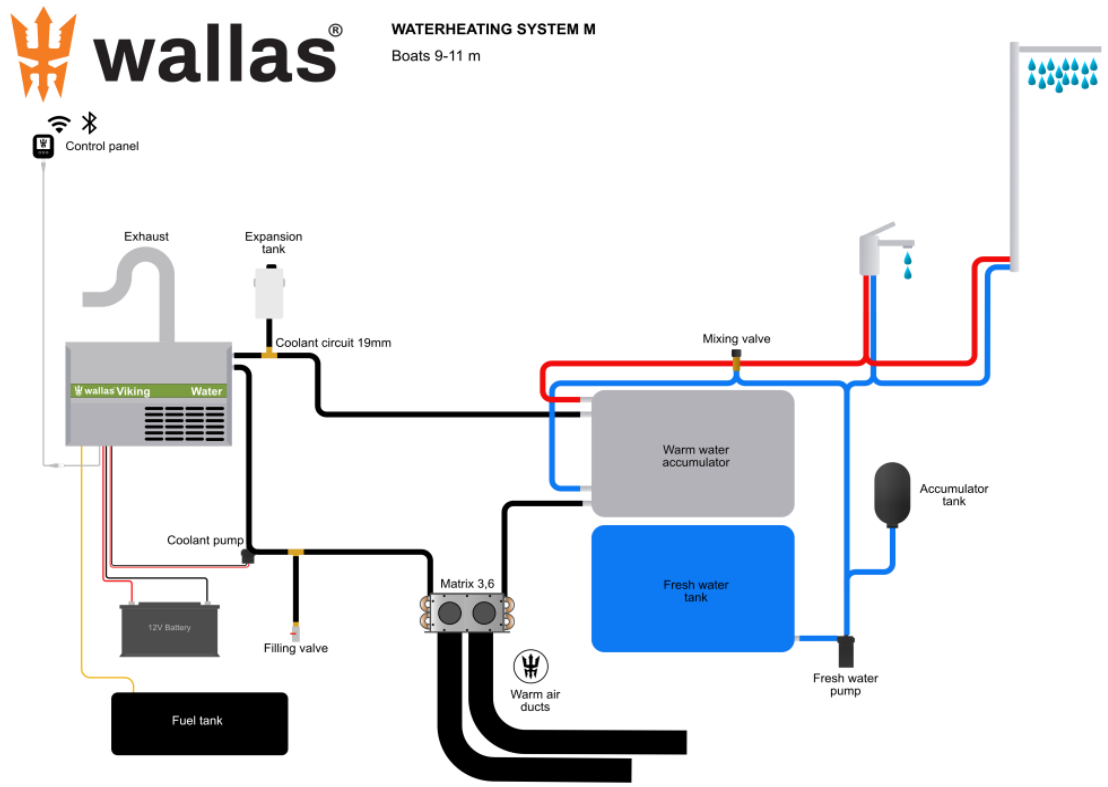

Matrix heaters can be installed near the heater, which shortens the coolant hoses. In this case, the air hoses are routed to the desired location and are longer. The Matrix heater can also be placed farther from the heater, making the coolant hoses and electrical wires longer and the air hoses shorter.

Device operation

Matrix heaters

Starting

To start the matrix heater, the water heater must be turned on. The Matrix heaters will turn on automatically, when the coolant reaches 40 °C, and if the room target temperature is above the actual room temperature.

Operation

The matrix heaters are a part of the water heating system. The Matrix heater allows one to heat up the vehicle. Matrix heaters are in the coolant circulation of the heating system. As the coolant flows through the copper pipes of the heat exchanger and air is pushed through by the fan, the air absorbs heat energy from the hot coolant. The hot air is led to living space via hot air ducting.

The Fan on the Matrix heater is controlled by the temperature target of the room. The logic behind the control is the following:

Target room temperature °C	Room temperature °C	Temperature difference °C	Fan power %
22 °C	17 °C	-5 °C	100 %
22 °C	18 °C	-4 °C	85 %
22 °C	19 °C	-3 °C	68 %
22 °C	20 °C	-2 °C	51 %
22 °C	21 °C	-1 °C	34 %
22 °C	22 °C	0 °C	17 %
22 °C	23 °C	1 °C	0 %
22 °C	24 °C	2 °C	0 %

The fan is RPM-controlled, which means the fan will spin according to the pre-determined logic shown above.

If the coolant is under 40 °C, the Matrix heaters fans will not turn, due to no heating capability.

Adjusting the heat

The heating can be adjusted on the 3009 Advanced control panel or via the Wallas Application. After setting the target temperature, the Matrix heater will follow the logic to reach the target temperature.

Shutdown

The Matrix heater can be turned off with the control panels Summer mode-button. This will allow the Water heater to keep the coolant temperature up, but won't turn the matrix heaters on.

Bleeding and filling system with coolant

It is easiest to fill ducting starting from the lowest point of installation. **If you start filling from the header tank there will be airlocks.** Filling from the lowest point takes most of the air out from the system, so this makes bleeding much easier. If there is air in the ducting heater does not work correctly.

Premix enough coolant according to manufacturers instructions (Standard recommendation is 50% antifreeze, 50% water in Finland)

Install T-branch to the lowest point of coolant ducting

Hose installation instructions

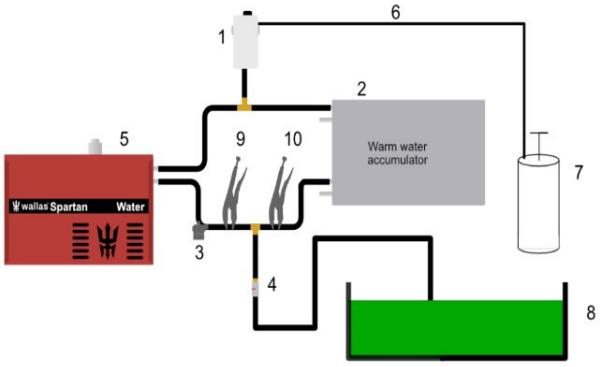

1. Open Expansion Tank
2. 16/24WA
3. Coolant pump
4. Filling valve
5. Heater
6. Suction hose
7. Suction pump
8. Coolant Feeding Tank
9. Pliers A
10. Pliers B

Coolant system needs to bleed from air before starting the heater. Never use heater without coolant.

Have hose closing pliers ready for feeding the coolant.
1. Connect the vacuum pump to the expansion tank's over bleeding hose.
2. Check that Valve 4 is open.
3. Squeeze the hose with the pliers B to prevent the coolant from flowing from this direction.
4. Gently pump the vacuum pump a couple of times. Listen when the coolant begins to flow to the heater.
5. Continue to pump the vacuum pump a couple of pumpings at the time as long as you see the coolant in the expansion tank. **Note! Too high under pressure / vacuum (too many pumpings at the time) may cause deforming of the heat exchanger.**
6. When you see that the coolant is in the expansion tank, close the pliers A. Then open pliers B.
7. Keep on pumping the vacuum pump until you can see that no bubbles are coming from the line to the expansion tank.
8. Close the valve (4) in the feeding tank.
9. Open the pliers A.
10. Remove the vacuum pump and make sure the coolant surface does not drop too low in the expansion tank.

Coolant expands 5% when the temperature changes 60 °C.
If you have more than 50 liter coolant in the system, you will need higher volume expansion tank or buffer tank (standard expansion tank volume is 3 liters).

Example table for coolant expansion

Coolant volume (20 °C)	Coolant volume (80 °C)	Standard expansion tank utilization
10 l	10,5 l	16,7 % (0,5 l / 3 l)
50 l	52,5 l	83,3 % (2,5 l / 3 l)

Camper/RV installation

Location of the exhaust gas hose

Location in the underframe

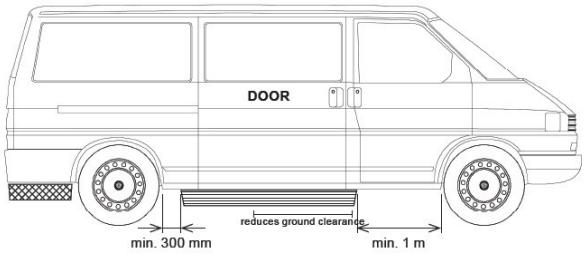

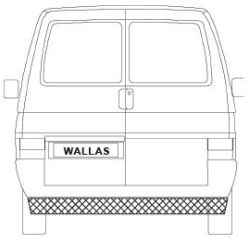

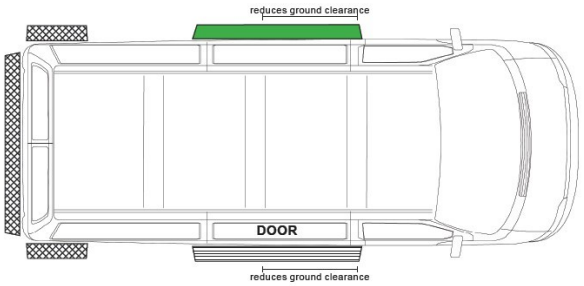

= Good installation place

= Possible installation place

= Forbidden installation place

When selecting the location for installing the chassis installation kit (4310), the internal layout of the vehicle and routing of the exhaust gas and intake air hoses should be taken into account. Try to keep the hoses as short as possible. Also keep in mind that the exhaust gas hose becomes hot.

A free flow of air past the exhaust gas hose must be ensured at all times. Install the end of the exhaust gas hose on a straight surface, flush with the vehicle's side line. Avoid corners and cavities where wind pressure may disturb the unit's operation. Also bear in mind that when installed in the middle of the vehicle, the exhaust gas pipe will reduce ground clearance the most.

The minimum distance of the exhaust gas pipe from the fuel tank's filler hole is 400 mm (16").

The front edge of the exhaust gas hose must always be installed flush with the vehicle's side line, it must not be under the vehicle. The minimum distance from the rear tyre of the vehicle is 0.3 metres, while the minimum distance from the front tyre is one metre. The exhaust gas hose must not be installed at the rear end of the vehicle.

Location under a window

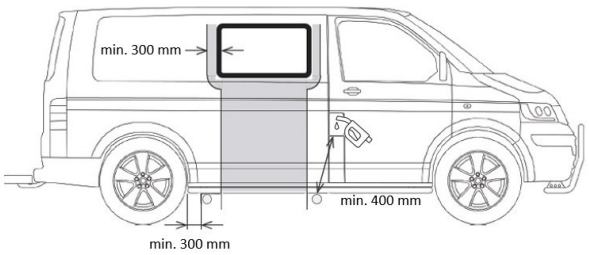

The minimum distance of the exhaust gas pipe from the fuel tank's filler hole is 400 mm (16").

The front edge of the exhaust gas hose shall not be installed under an opening window or closer than 300 mm to the window's edges. If the exhaust gas hose has to be installed near an opening window, the window must be prevented from opening or fitted with a switch that prevents the unit from being used when the window is open.

The minimum ground clearance shall not be exceeded.
Make sure the exhaust hose does not touch anything flammable underneath the vehicle, for example grass. The hot exhaust might cause a fire.
Make sure that there is open way to the point of jack up.

Installing the exhaust gas hose

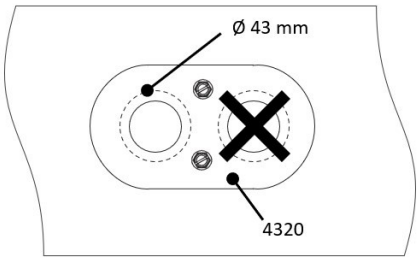

1. Drill **one** approximately ø 43 mm hole for the hose, as illustrated.
2. Install the bottom penetration cover plate set (**4320**).

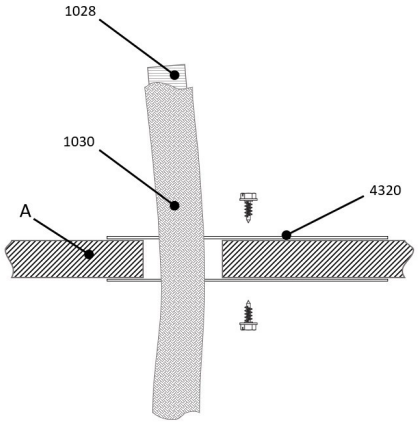

A Vehicle floor structure

3. Insulate the exhaust gas hose (**1028**) with the fiberglass sleeve (**1030**).

If the floor structure of the vehicle at the location of the exhaust gas hose is not heat resistant, remove part of the insulation and replace it with heat-resistant material.

Fixing to the vehicle bottom

There are many possible ways to install the exhaust gas hose to the vehicle's bottom structure. The basic chassis installation kit (**4321**) can be used to install the exhaust gas frame to most vehicles. Installation kit for vehicles is sold separately.

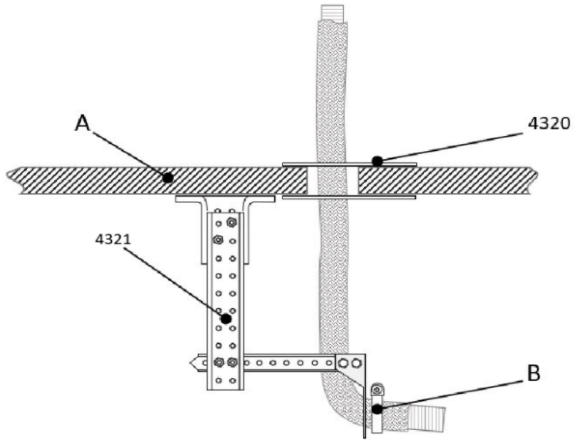

A Vehicle floor structure
B Hose clamp 20-32 mm

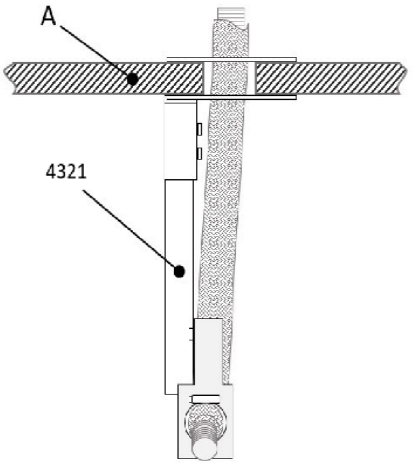

A Vehicle floor structure

Exhaust gas connections coaxial

Exhaust gas lead-throughs

It is important to choose right part for right purpose. Coaxial exhaust gas lead-throughs **2467**,**5300** and **5400** are recommended for Wallas unit. The ø 28/45 mm lead-throughs fit the exhaust gas hose **2448**, providing maximum wind tolerance. All exhaust gas lead-throughs are stainless steel.

Safety distances

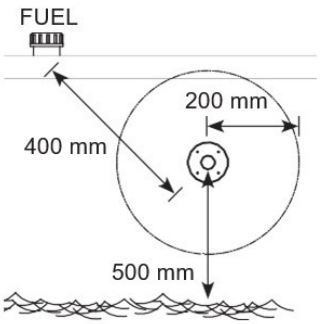

Location

Air must always flow freely past the lead-through. Install the lead-through on a flat surface.
Avoid corners or recessions where wind pressure can disturb the functioning of the device.
The minimum distance of the lead-through from the fuel tank's filler hole is 400 mm (16").
The minimum distance of the side lead-through from the surface of the water is 500 mm (20"). Especially in sail boats it should be noted that the lead-through must never be submerged.
It is recommended to place the lead-through in the side as far back as possible or directly in the transom.

Never place lead through near cabin fresh air intake. Make sure that exhaust gases can never mix into fresh air intake.

Goose neck

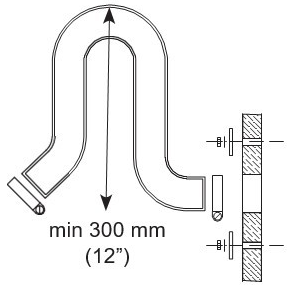

Installation

When preparing the installation cut-out for the lead-through, it is a good idea to use the lead-through as a model for the cut-out; especially if the lead-through is circular.
If necessary, seal the installation cut-out with silicone in addition to the lead through seal. **Note! Do not use silicone on a wooden boat**.
The side lead-through must always be equipped with a so-called goose neck section. The goose neck will effectively prevent splash water from getting to the device. The highest point of the goose neck must always be above the surface of the water.
The device will go out, if the exhaust gas lead-through is submerged.

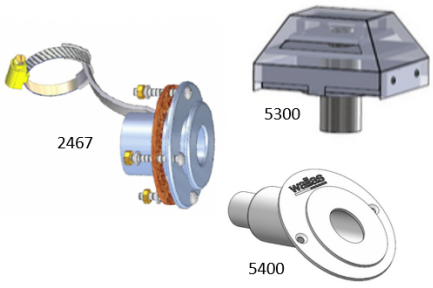

Other things to note

Exhaust gas is hot. Always ensure that there is nothing that is susceptible to heat damage within 200 mm (8") of the effective area of the exhaust gases (e.g. ropes, fenders or the side of another boat).
All lead-throughs raise the temperature of their surroundings.
A wooden deck, in particular, may dry due to the heat. Remember that the surface of the lead-through is hot during use.
An exhaust gas tube with a length of more than 2 meters (7') has to be equipped with a drainage lock **2471** (condense water) located to the lowest point of the tube.
The exhaust gas pipe must be made of stainless steel. If necessary, seal the connections between the exhaust gas pipe and the lead through with heat-resistant silicone.
When installing the lead-through to the stern side or to otherwise leaning position, be sure that the water do not stuck the exhaust. Drainage lock **2471** available for this purpose.
In metal-hulled boat, ensure that the device, the flue gas lead-through, the fuel connection, the control panel and all other parts are insulated from the boat's hull.

!	Exhaust gases are hot and toxic.

Closable lead-through 2460 (Viking water only)

Assembly and detaching instructions

Closable lead-through **2460**

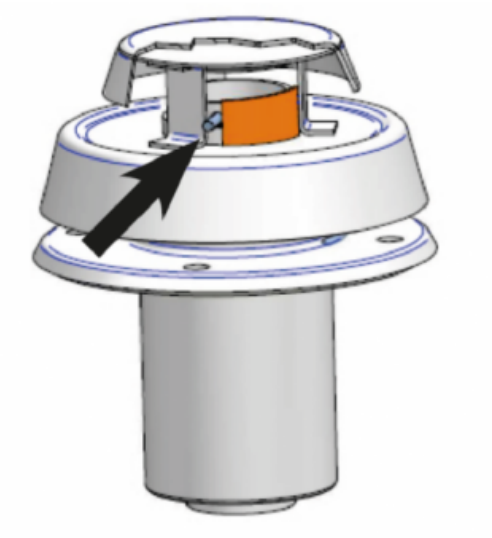

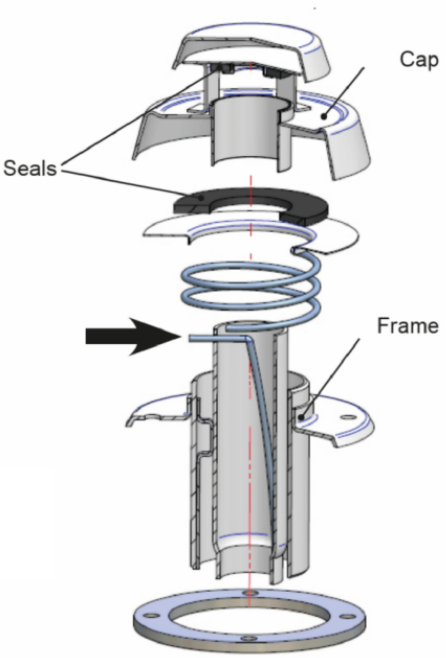

Maintenance
To keep the seals from hardening, lubricate them yearly with a heat-resistant petroleum jelly.

The cap of the closable lead-through must be detached for installation and seal maintenance by pressing the spring indicated by the arrow in with, for instance, a screwdriver. Take care not to let the screwdriver slip as the spring is very stiff. Hold the cap with your other hand when pressing in the spring. When the spring is down, pull the cap gently out of the frame. When assembling the lead-through, ensure that the order of the parts is correct. Also make sure that the spring goes in the correct hole in the cap. Otherwise, the lead-through cannot be closed.

Check that closable fitting is open before starting the device.

2460 package content

1 pcs	Closable lead-through	
1 pcs	Accessory bag **17676**	
	Fastening screw TORX M5X40 Nut M5 Washer M5 Hose binder 32 - 50 mm Gasket	4 pcs 4 pcs 4 pcs 1 pcs 1 pcs

Side lead-through 2467

Assembly instructions
A side lead-through is installed in the side of the boat or in the transom. In sailboats it is recommended to install it in the transom. The installation always requires a so-called goose neck. Make the necessary installation cut-outs and spread a suitable sealing agent on both sides of the seal and on the screw holes. This will ensure that the connection is waterproof.

Side lead-through **2467**

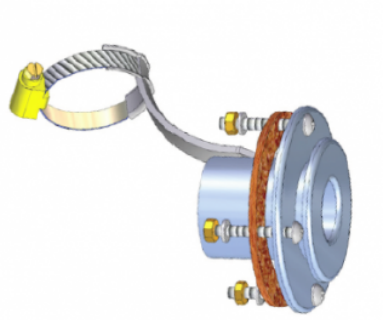

Length difference of the pipes

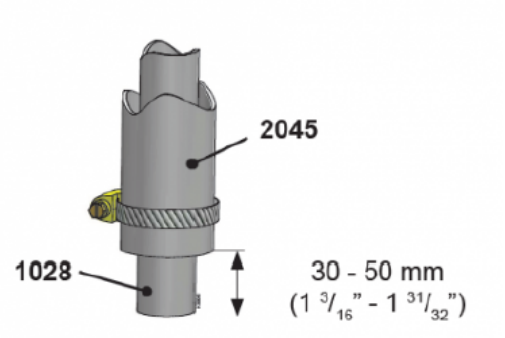

The **1028** exhaust gas pipe must be 30-50 mm (1 3/16" - 1 31/32") longer than the **2045** inlet pipe. This way the exhaust gas pipe will stay in place in the lead-through more firmly. The measurement depends on the overall length of the piping.

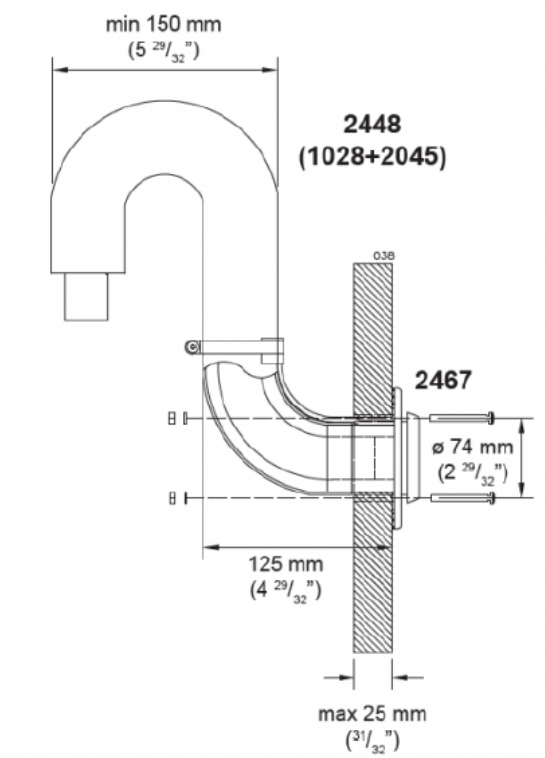

Side lead-through **2467** installed. The installation cut-out is ø 50 mm (1 31/32") and the screw holes are 4 x ø 6 mm.

2467 package content		
1 pcs	Side lead-through	
1 pcs	Accessory bag **17679**	
	Fastening screw TORX M5 x 40 mm Nut M5 Washer 5,3 x 10 mm Hose clamp 32/50 mm Gasket 87/61x4mm	4 pcs 4 pcs 4 pcs 1 pcs 1 pcs

Deck lead-through 5300

Installation instructions
Installation cut out is ø 50mm and the screw holes are ø 6 mm x 4 pcs.

Deck lead-through **5300**

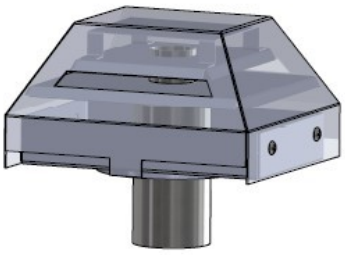

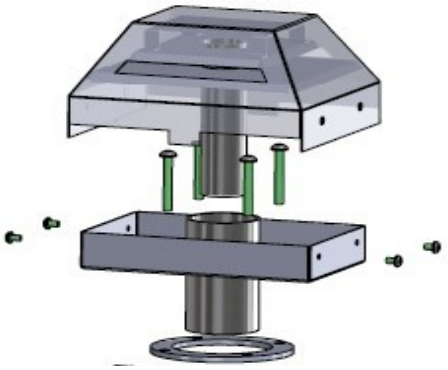

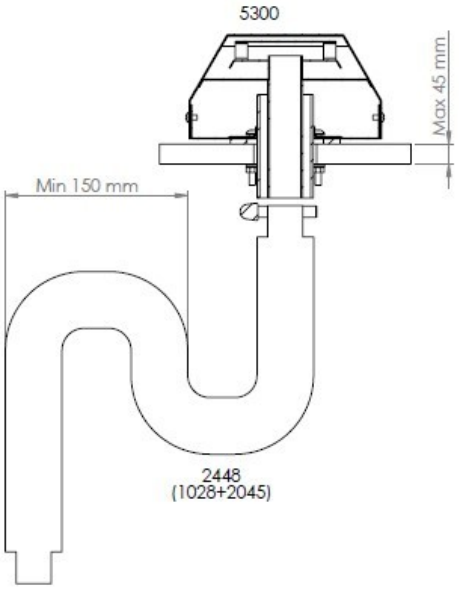

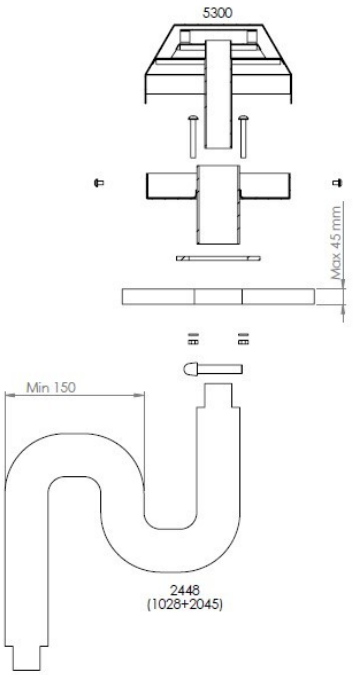

5300 package content		
1 pcs	Deck lead-through	
1 pcs	Accessory bag **17679**	
	Fastening screw TORX M5X40 Nut M5 Washer 5,3 x 10 mm Hose clamp 32/50 mm Gasket 87/61x4mm	4 pcs 4 pcs 4 pcs 1 pcs 1 pcs

Drainage lock 2471 - Water heaters

It is recommended that a drainage lock is installed if there is a risk of condensed or splash water entering the exhaust.

Drainage lock **2471**

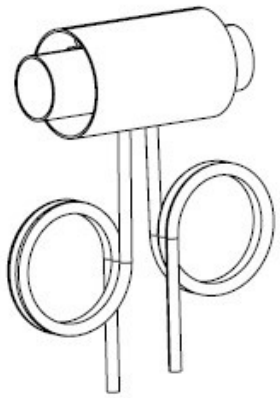

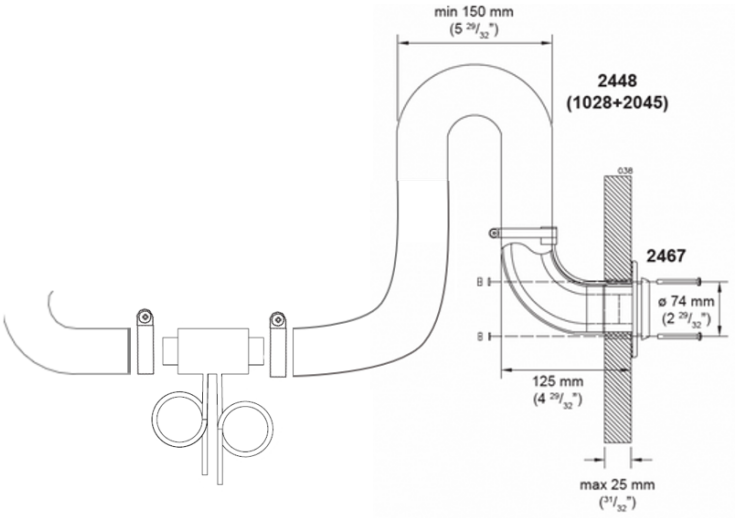

If necessary, a drainage lock can be installed into the exhaust pipe of a hull lead-through, but note the drainage lock must be positioned after the gooseneck.

!	**If the heater is located below the exhaust head, the drainage lock must be always installed!**
!	When washing the boat with a pressure washer, never aim the water jet at the lead-through as the device may get wet.

Stern lead-through 5400



Installation instructions

Follow instructions for the exhaust gas lead-throughs.

Exhaust lead through for negative transom. Designed especially for sail boat´s stern.

Insulation kit 2461

An insulation kit (**2461**) must be used to insulate the lead-through from the boats metal hull. The insulation kit insulates the exhaust gas lead-through and the device from each other. In fault situations the insulation kit prevents electric circuit running between the metal hull and the device. This could result the oxidation or malfunctioning of the devices circuit board and the circuit board would be damaged.

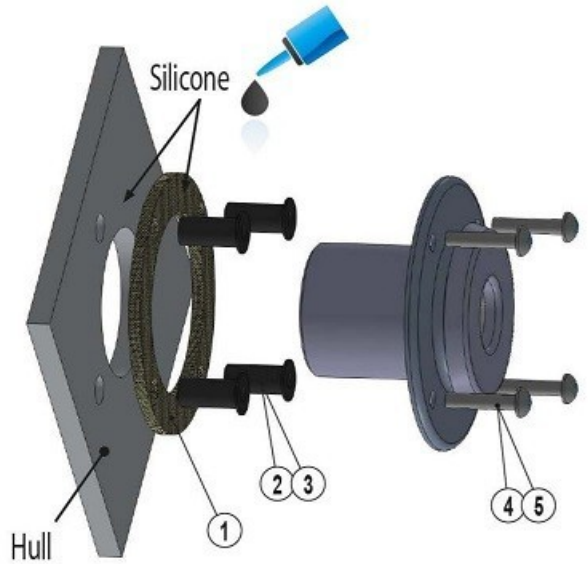

2461 insulation kit includes:

Part #	Definition	Amount
1	Gasket	2 pcs
2,3	Rubber nut M5 x 0,8 x 39,8	4 pcs
4,5	Screw M5 x 40 A2	4 pcs
	Installation instructions	1 pcs

Fuel connections

The standard length of the supplied fuel hose is 4 m (max 8 m). Cut the fuel hose to a length suitable for installation.

The lift height of the pump should be less than 2 m; preferably 0.5-1 m. The fuel pipe must always have a Wallas filter, either in-line or in the fuel tank. Only one filter should ever be in the system. The fuel filter can be installed either near the device, near the tank, or in another location where it can be easily checked and replaced, when necessary.

Diesel engine fuel filters and/or separators are not approved for use. All soft connections should be made with rubber or silicone hose which is resistant to fuel. When joining with rubber connectors, tubing ends should butt against each other.

Fuel lines other than those supplied by Wallas should be small bore (2-3mm) and must be qualified for suction use. Typical rubber fuel hose is not qualified for suction use, having a soft, collapsing inner wall lining. Please contact your Wallas dealer/distributor if non-standard fuel lines are being considered.

Connection to a heater	
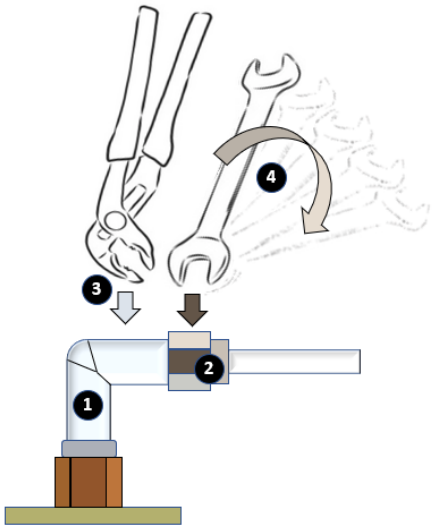	1. Pump inlet elbow 2. Fuel line nut 3. Use pliers to hold the pump inlet elbow steady 4. Tighten the 12 mm fuel line nut. Tightening torque is 19 Nm (14 ft/lbs) **Note!** **The joint has to be very tight to prevent air leaks.**

Country-specific requirements

The standard fuel hose is plastic. Please observe country-specific requirements with regard to the material of the fuel hose/pipe and the fuel filter. The inner diameter of a new replacement hose should be equal to the inner diameter of the plastic hose. Copper pipe **300692** and metal filters **30016** are available as accessories. Ask local requirements from your distributor.

Fuel feed

If the lift height exceeds 2 m, the fuel feed must be checked and, if necessary, adjusted.
The fuel feed must also always be checked, if parts of the fuel system, such as the pump or the electronics card, have been replaced. Fuel system adjustments are device specific. These adjustments should only be carried out by an authorized service shop.

Connection to a fixed tank supplying other diesel consumers

The Wallas device must have a dedicated (not shared) connection with a fuel filter outside the tank.

Connection to a separate tank

Cap run-throughs and sintered in-tank filters are used on plastic tanks. The fuel tank should be mounted securely.

Fixed tank connection 30011

Installation instructions for tank connection 30011

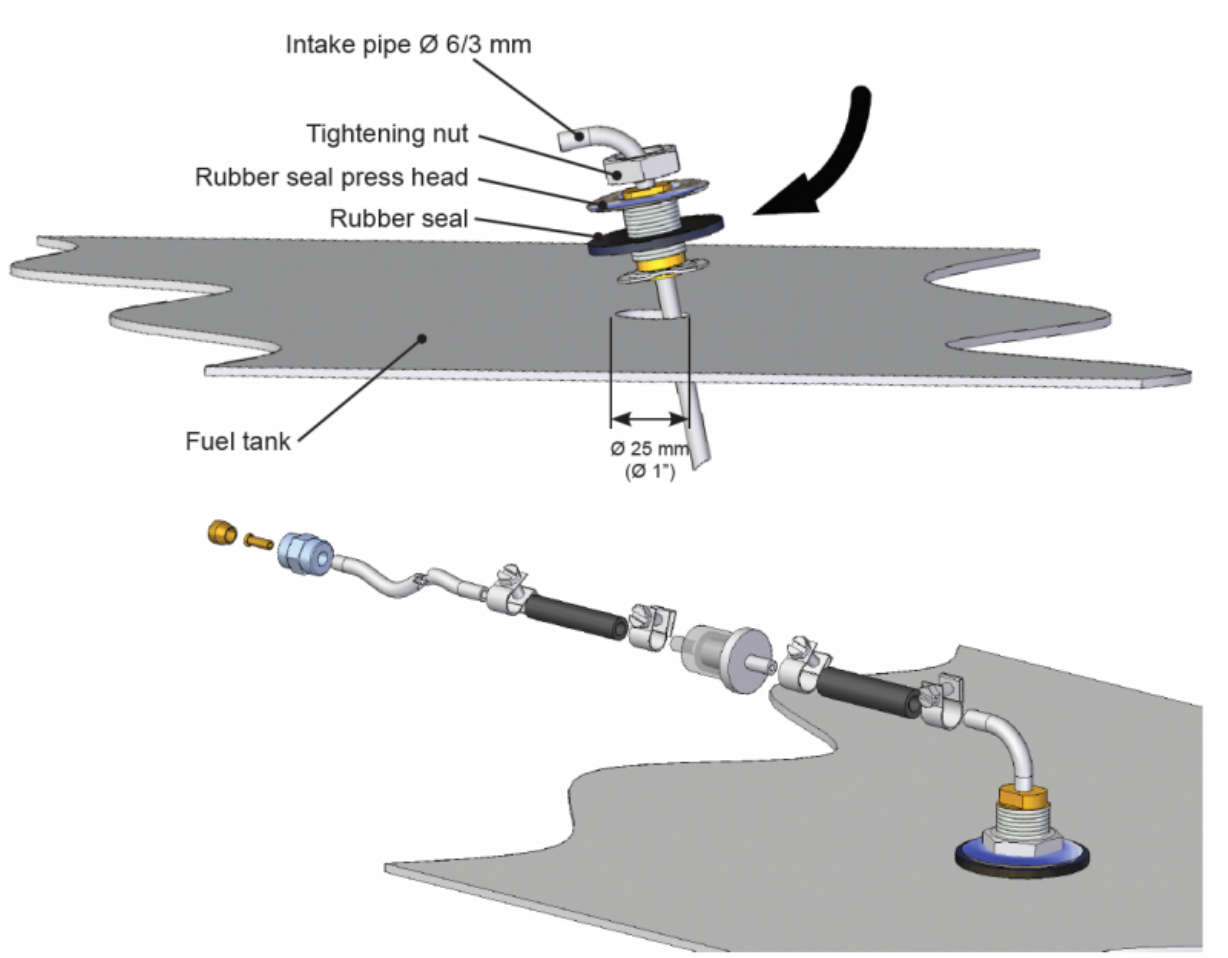

1. You will need to make a Ø 25 mm (1") hole in the upper surface of the fuel tank. Choose the location of the hole so that when the fuel tank tilts the end of the intake pipe will stay in the fuel even if the tank is not full. If the end of the intake pipe does not reach the fuel, the device will quickly choke on the air in the fuel system and that can cause malfunction to the system.
2. Cut the fuel intake pipe (Ø 3.2/0.8 mm) to the appropriate length. The end of the pipe must not touch the bottom of the tank in order to keep water and sediment from the system. It is recommended to cut the pipe short enough to leave the engine intake pipe at a lower level. This way the device cannot empty the tank.
3. Install the pipe straight end first and angle the two "ears" at the bottom of the threaded barrel inside the hole and then align the threaded barrel vertically so the ears are hooked on the underside of the tank top. Carefully slip the rubber washer over the bent pipe end and over the threaded barrel, followed by the metal washer and the nut. Thread the nut to the threaded barrel and tighten, sealing the fitting to the top surface of the tank.

If the device uses the main tank of the boat, note that the device cannot take the fuel from the same fuel output line as the engine of the boat.

Separate tank connection 367200

If the fuel will be taken from a separate tank, a tank connection **367200** must be installed.

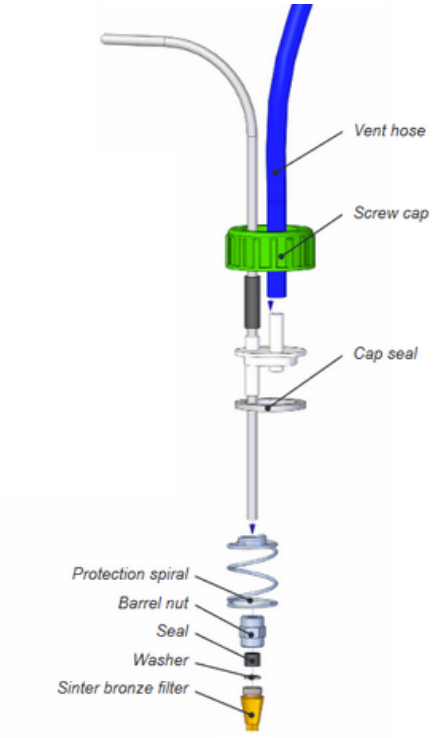

Wallas fuel tanks

Wallas fuel tanks are sold as accessories.

Volume	Length x height x width	WALLAS code
5 l	200 x 300 x 130 mm	2024
10 l	380 x 195 x 210 mm	2027
33 l	500 x 230 x 350 mm	4030
130 l	800 x 400 x 600 mm	4130

Solenoid valve 30012

The solenoid valve **30012** (available as accessory) prevents the tank from emptying in case the fuel system fails. The fuel filter should be installed before the solenoid valve.

Our recommendations in the following installation configurations:

Preferred installation layout (solenoid valve 30012 is not required)	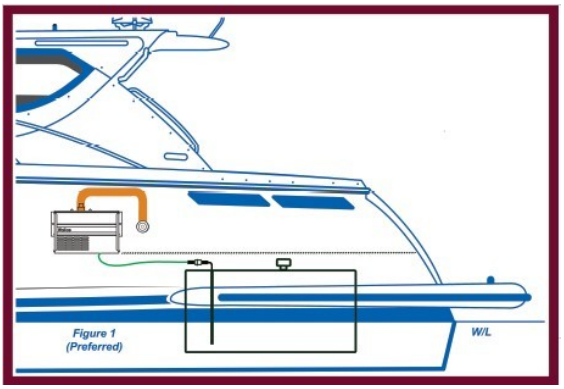
1. Fuel level is below the heater/stove. See figure 1. • No special accessories required	
Solenoid valve 30012 is recommended	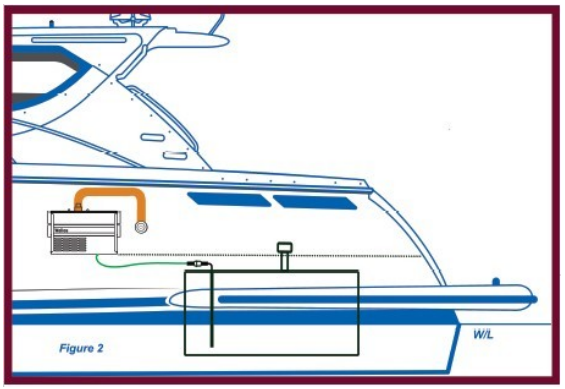
2. Fuel level may temporarily rise above the heater/stove (e.g. in the fuel tank filler pipe or when the boat tilts). See figure 2. • No special accessories required but solenoid valve 30012 is recommended.	
Less desirable installation arrangement (solenoid valve 30012 must be installed)	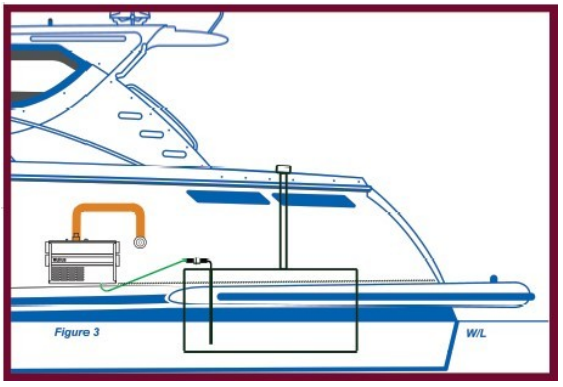
3. Fuel level is above the heater/stove. See figure 3. • Less desirable installation arrangement • Possible siphon problem • Solenoid valve **30012** must be installed in the fuel hose near the tank.	

!	**If the fuel level in the tank is above the device, a solenoid valve 30012 must be installed in the fuel line immediately after the tank lead-through.**

Tank external filters 30015, 30016

Assembly instructions

Filters can be installed in a ø 5 or ø 6 mm plastic tubing or 1/8" metal pipe. Ensure that the fuel pipes are clean before installing the filter. There must be no debris or impurities between the pump and the filter as they will clog the pump. The filter type must be selected according to the operating conditions and country-specific requirements.

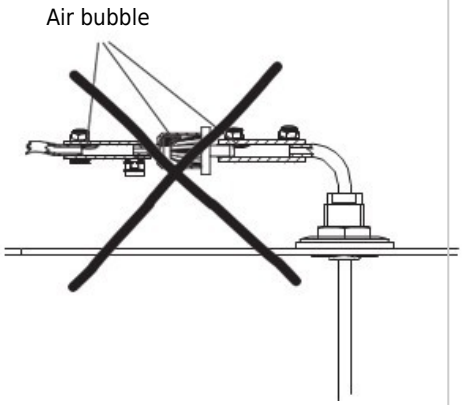

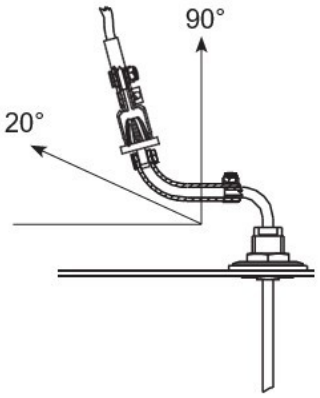

Fuel filter 30015

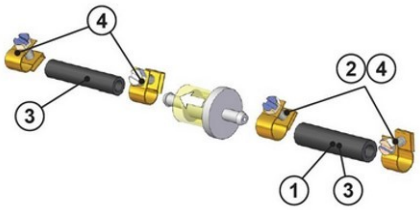

The filter is supplied with the device.

The filter can be installed directly in the **30011** tank connection by using a ø 6 mm rubber hose (1) and 10 mm hose binders (2). Alternatively, the filter can be installed between two ø 5 mm fuel hoses with ø 5 mm rubber hose (3) and ø 8 mm hose binders (4).

Install the filter in the direction of the arrow on it.

Fuel filter 30016 (accessory)



This filter is used in countries where a metallic fuel transfer system is required. A 1/8" metal pipe is used for the installation.

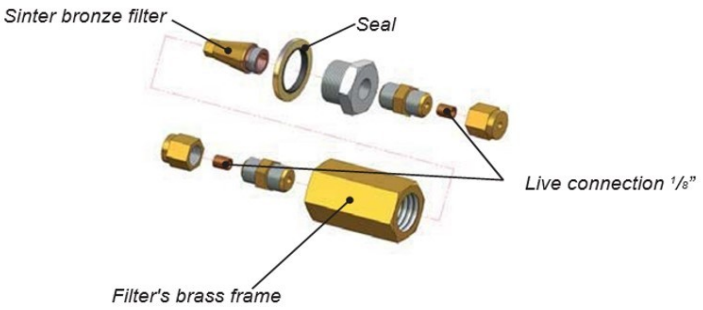

Selecting the fuel

When selecting the fuel type, pay attention to the temperature limits of each particular fuel. The limit values provided here are to be treated as guidelines. Confirm the actual temperature limits from your local fuel supplier.

- HVO-Diesel, Diesel, summer grade, temperature must not fall below -5 °C.
- HVO-Diesel, Diesel, winter grade, temperature must not fall below -24 °C.
- Diesel, arctic winter grade, temperature must not fall below -40 °C.

If the temperature drops lower than the minimum level, paraffin may form in the fuel. This may result in the fuel filter and pump being clogged. The clog will dissolve only if the fuel temperature rises clearly over 0 °C.

For fuel additives and life length of the fuel ask information from your fuel supplier.

Recommended fuels

As one of the leaders in ultra-low-emission burner technology, Wallas is committed to clean combustion processes.

With our laminar flow Green Boost burner technology and adaptive software, our burners have ultra-low emissions, including exceptionally low CO_2 and NOx levels.
All Wallas-Marin diesel heaters and stoves use diesel, renewable diesels (HVO 15940), or paraffin oil (kerosene) as fuel.
These include:
Today’s road and boat diesels (EN590), renewable (HVO 15940).

We don´t recommend the use of FAME (Fatty Acid Methyl Esters) fuels.

The methyl esters in biodiesel are hygroscopic. This means that they can absorb considerably more moisture than petroleum-derived diesel and hold this in suspension in the fuel. Petroleum-derived fuels absorb considerably less moisture by comparison and tend to shed water as a separate layer at the bottom of storage tanks. When water is able to contaminate diesel, it provides conditions suitable for microbial growth and can lead to diesel bugs, molds, yeasts and bacteria spreading throughout the fuel. FAME is bio-degradable and is an ideal source of nutrients for microbes. If contamination is left untreated, it can damage the fuel permanently.
Source: https://www.crownoil.co.uk/guides/fame-biodiesel-guide/

!	**Confirm the actual temperature limits for the fuel you are using from the fuel supplier.**

Tank connection 30018

Einon® (30018) is a leak-proof intake fuel line.

Getting Started

Parts needed in installation are put in right order and are connected together with a wire. You shall never cut the installation wire, you'll need it when installing the intake pipe. (Installation without the wire is not possible).

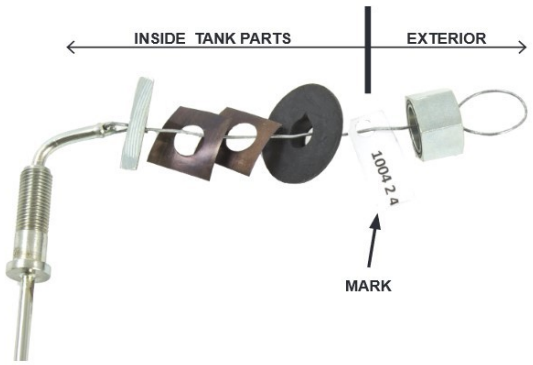

Installation instruction for 30018 (camper installation)

1. Make sure that the fuel tank is empty enough.
2. Search about 4 cm flat section from the fuel tank where you can drill a 13 mm diameter hole.
3. Clean the selected area of protection grease and clean also other possible dirt.
4. Drill a hole.
5. Remove the burr from hole (inside and outside).
6. Figure out without installing for Einon ® **(30018)** suitable bending and length.
7. Cut the pipe end diagonally and remove burrs.
8. Install the cut and bent intake pipe through the drilled hole into the tank.
9. Push through the hole into the tank all the other interior parts (up to the mark), keep the order of parts as they are mounted to the wire.
10. Pull from the wire until the Einon ® **(30018)** threaded part is outside of the tank.
11. Turn the Einon ® **(30018)** to the correct position and tighten the tank external part (nut).
12. Attach the fuel line to the Einon ® **(30018)**.

For camper installation only! Materials are not stainless steel.

Device operation

Ignition

The start-up process and heating is automated.

The heater will ignite when the heater's Start/Stop Icon is selected and you confirm the selection by holding the Select Button down for 3 seconds. ”Starting" will appear on the screen, indicating that the heater is on and in its Starting mode.

The light orange combustion light will light up when the burner flame has been ignited and the combustion has stabilized (after about 5 min). Heater will be fully operational about 10 minutes later. About 12 minutes after first giving the start command, the system controls will be handed over to the user, signaling the end of the Start sequence.

First start-up

After installation or maintenance, if the fuel line is empty, the heater may not start at the first attempt. Start-up phase with empty fuel line may be longer than normal and might take up to 15 minutes. If the heater does not ignite, the orange combustion light will not appear and error information is shown. The heater will shut down after the cooling phase completes. The device cannot be restarted until the cooling phase is completed. When the cooling phase is finished, switch the heater on again. Depending on the length of the fuel hose, the heater may have to be started several times during priming. Observe how the fuel moves in the fuel hose while starting up the heater. Fuel should move about 15mm (5/8") each time the fuel pump clicks, and should not fall back toward the tank between clicks. If fuel motion is weak or falls backward, check the fuel nut at the pump for tightness and tighten if needed. Tightening torque is 19 Nm.

Lock out

If the device does not start after two attempts, the heater will lock itself, preventing re-start, and lock icon will appear. Investigate, find and follow error solving instructions to resolve the problem prior to further use. After resolving the problem, remove the lock (instructions in the control panel section) and start the unit.

Adjusting the heat (coolant)

Coolant target temperature can be adjusted between 55 - 85 °C (131 F - 185 F).
Instructions how to set the target coolant temperature are explained in the Control Panel section in detail. Preferred temperature units (Celsius or Fahrenheit) can be selected from Control Panel (Settings - Temp Unit).

Wallas Spartan Water/Viking Water has automatic temperature control for coolant. Target coolant temperature will be maintained automatically, through power level changes and pausing when necessary.

Heater temperature control will estimate temperature change over ten (10) minutes to optimize heat output to the water.

Matrix Heaters

Matrix Heaters produce hot heating air from coolant circulation. Matrix Heater operation is automated. Below is the

Starting - Matrix

To start the matrix heater, the water heater must be turned on. The Matrix heater will turn on automatically, when the coolant reaches 40 °C, and if the room target temperature is above the actual room temperature.

Operation - Matrix

The matrix heaters are a part of the water heating system. The Matrix heater allows one to heat up the vehicle. Matrix heater are in the coolant circulation of the heating system. As the coolant flows through the copper pipes of the heat exchanger and air is pushed through by the fan, the air absorbs heat energy from the hot coolant. The hot air is led to living space via hot air ducting. The Fan on the Matrix heater is controlled by the temperature target of the room. The logic behind the control is the following:

Target room temperature °C	Room temperature °C	Temperature difference °C	Fan power %
22°C	17°C	-5 °C	100 %
22°C	18°C	-4 °C	85 %
22°C	19°C	-3 °C	68 %
22°C	20°C	-2 °C	51 %
22°C	21°C	-1 °C	34 %
22°C	22°C	0 °C	17 %
22°C	23°C	1 °C	0 %
22°C	24°C	2 °C	0 %

The fan is RPM-controlled, which means the fan will spin according to the pre-determined logic shown above.

If the coolant is under 40 °C, the Matrix heater fans will not turn, due to no heating capability.

Adjusting the heat - Matrix

The heating can be adjusted on the 3008 Advanced control panel or via the Wallas Application. After setting the target temperature, the Matrix Heater will follow the logic to reach the target temperature.

Shutdown - Matrix

The Matrix Heaters can be turned off with the control panels Summer mode-button. This will allow the Water heater to keep the coolant temperature up, but won't turn the matrix heaters on. Matrix Heaters will turn off when the heater is turned off.

Adjusting the hot water

Hot water target temperature (if cylinder stat is connected) can be adjusted between 30 - 80 °C (86 F - 176 F).

Note following situations where the system will give a warning to the user:

Situation	Warning
Hot water target temperature is set to 54 °C or below	Risk of legionella bacteria
Hot water target temperature is set higher than the coolant target temperature	Hot water target should not be set higher than coolant target

Pause feature (Thermo Mode only)

Coolant target temperature can be adjusted between 55 - 85 °C (131 F - 185 F).

The pause feature automatically turns the heater to pause if the coolant target temperature is exceeded by +10 °C (18 F). The unit will start heating again when the coolant temperature drops 10 °C (18 F) from the target temperature. Heater will attempt to maintain the target coolant temperature.

For example if the coolant temperature is set to 70 °C (158 F) then the heater will go to Pause mode when the temperature rises to 81 °C (178 F). The unit will start heating again when the temperature drops to 59 °C (138 F).

If the heater is in Pause mode, "Paused" will appear on the screen. During pause, the fuel pump stops and the system runs a normal cool down period and then goes silent. In summertime mode heater is started when hot water accumulator temperature drops under the set target coolant temperature.

Summertime feature (hot water tank/calorifier)

Summertime feature can be selected (On/Off) from the Control Panel (settings).

When the summertime feature is not selected (Off) and there is a commercial hot water accumulator in the system, the pause mode will be controlled by coolant target temperature as explained in the earlier chapter.

When the summertime feature is selected (On) and there is a commercial hot water accumulator in the system the heater will go to pause mode when the coolant target temperature is exceeded by +10 °C (18 F) and it starts heating when the hot water temperature drops below the target temperature.

Example:

Summertime	Target coolant temp.	Target hot water temp.	Pause ON temp.	Pause OFF temp.
OFF	65 °C	50 °C	76 °C	54 °C
ON	65 °C	50 °C	76 °C	49 °C

Summertime feature (Wallas on-demand hot water accumulator)

Cylinderstat will be assembled to cold water inlet if the heater is wanted to be wake up when the hot water is used just a little. Or to the hot water outlet if the water is wanted to be used fully. Hot water outlet will lessen the starts of the heater, but is slower to react the needed hot water demand than the cold water inlet.

Shutdown

You can shutdown the heater any time by pressing the Select button down for more than 4 seconds. White color in the Power on/off icon indicates that unit is shutting down.

Remote control

The heater can be controlled with IOS or Android WALLAS REMOTE APP in the local network or over the WLAN network. Please read instructions from APP manual.

Control Panel Installation

3008 and 3009 Control Panel cable can be assembled as a surface mount or behind wall.

Surface mount, cable visible	Cable hidden behind the wall
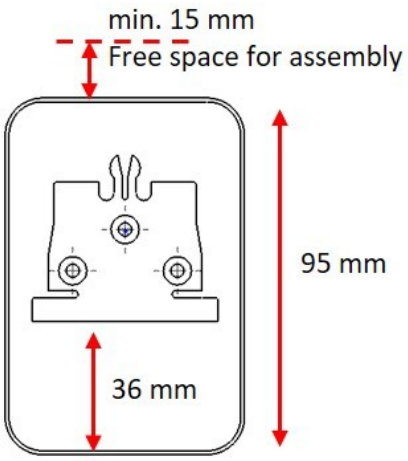	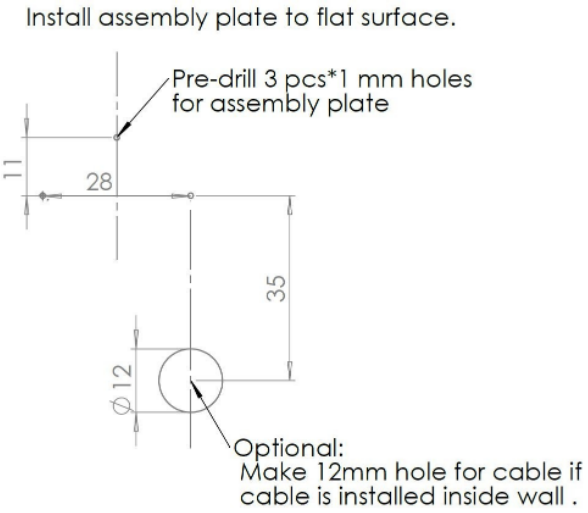
1) Install the mounting plate and mark places for the screws. Pre-drill 3*1 mm holes for screws. 2) Cut the cable opening in bottom of the panel. 3) Install the mounting plate. 4) Slide the panel in place from the top down. 5) Remove the display protection tape.	1) Install the mounting plate and mark places for the screws. Pre-drill 3*1 mm holes for screws. 2) Drill 12 mm hole for the cable. Draw and check hole location before drilling, it should not be visible when panel is mounted. 3) Install the mounting plate. 4) Slide the panel in place top-down. 5) Remove the display protection tape.

	**Cable connection**
	Please note that cable connector release pin is positioned as in the picture, when connecting cable into panel. (Soft "click" sound can be heard when cable is connected.)
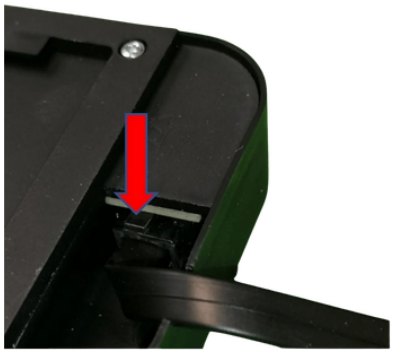	**Cable release**
	Press connector release clip (shown in the picture) before pulling the cable out.

Basic features for water heaters

Advanced Control Panel (3009)

Before using the Control Panel ensure it is assembled correctly with the assembly plate (see assembly instructions from sales package) and connected to the Wallas unit. This manual refers to Control panel SW 1.5.4 and heater SW 1.3.2.

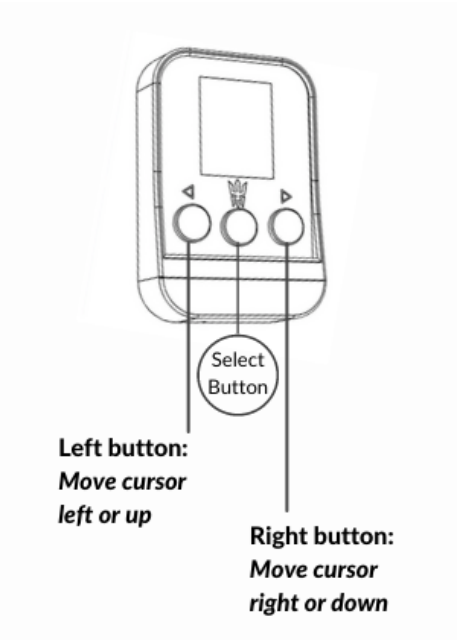

Digital Panel Legend:

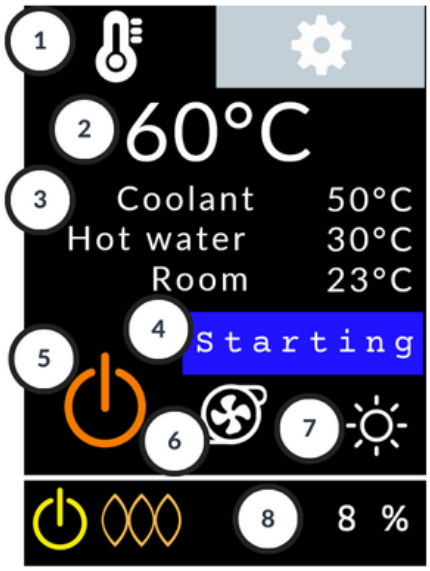

1 Main Menu Bar

2 Target Coolant Temperature

3 Coolant / Hot Water / Room Temperature (°C or F available)

4 Heater Status

5 Start/Stop Icon (white Icon Off, orange Icon On)

6 Secondary coolant pump icon (if installed)

7 Summertime

8 Info Bar: Power On/Off, Combustion, Info, Lock, Heater power %

Main Menu Bar

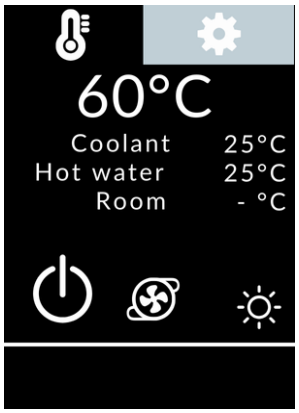	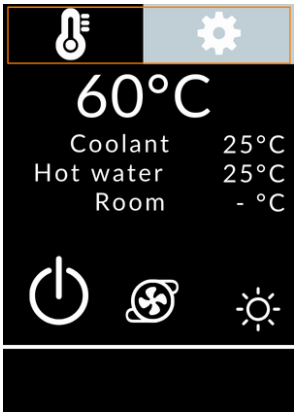	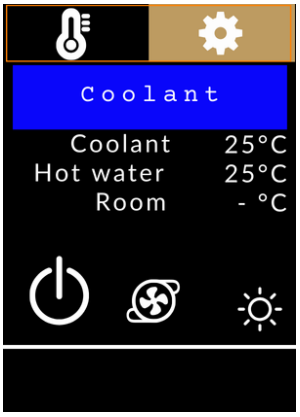	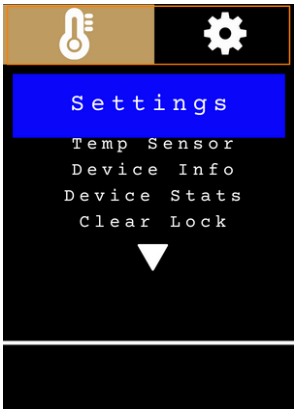
Home screen	Use the **Arrow buttons** (left or right) to move the orange selection square to the **Main Menu Bar.** Press **Select Button** to activate the **Main Menu Bar.** Use **Arrow Buttons** to choose the **Water Heating Mode** and press the **Select Button** to select**.**	Water heating mode is selected.	Settings is selected.

Ignition

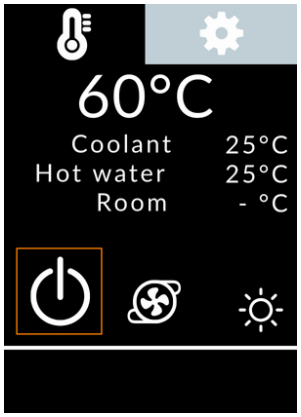		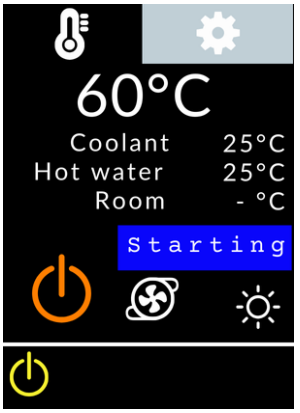	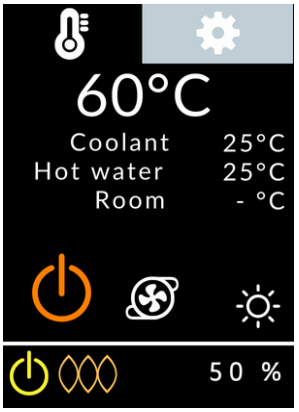
To start, use the **Arrow Buttons** (left or right) to move the orange selection square to the white **Start/Stop Icon.**	Confirm the selection by holding the **Select Button** down for 3 seconds (safety feature). White icon turns orange.	*Starting* will appear on the screen.	The light orange combustion light will light up when the burner flame has been ignited and the combustion has stabilized (in about 5 min). Heater will be fully operational about 10 minutes later.

Coolant temperature setting

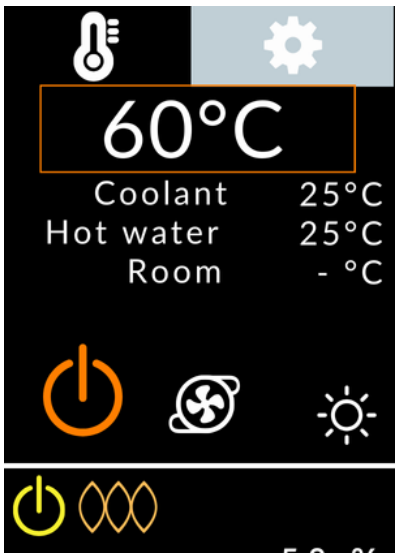	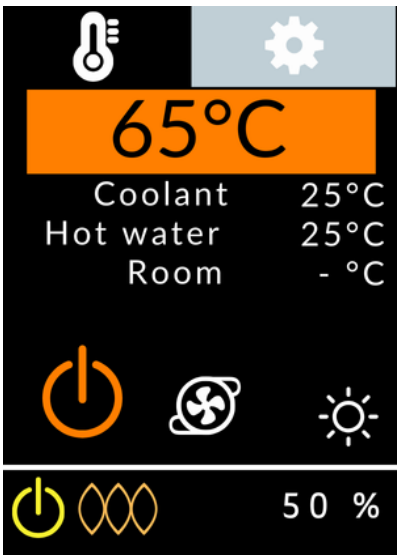
Move the selection square to the **Target Coolant Temperature** and press the **Select Button**.	Press **Arrow Buttons** (left or right) to set the desired coolant temperature.

Pause Mode

Coolant target temperature can be adjusted between 55 - 85 °C (131 F - 185 F).

The pause feature automatically turns the heater to pause if the coolant target temperature is exceeded by +10 °C (18 F). The unit will start heating again when the coolant temperature drops 10 °C (18 F) from the target temperature. Heater will attempt to maintain the target coolant temperature.

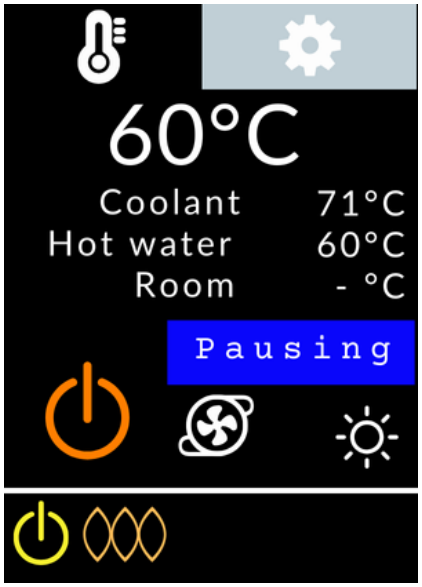	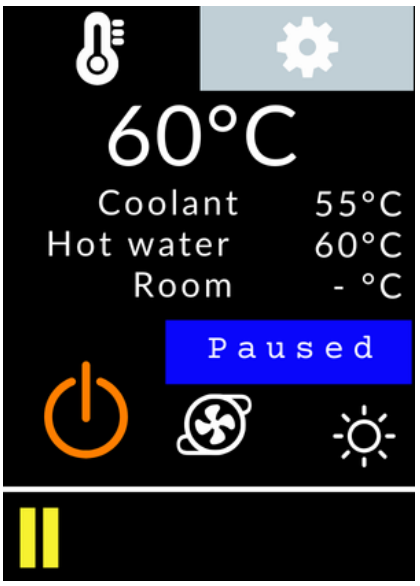
Pausing will appear on the screen when the heater is shutting down and cooling. This takes several minutes.	If the heater is in Pause Mode, *Paused* will appear on the screen. Heater will re-start heating again automatically.

Summertime

Summertime selection disables coolant pump in pause mode. Heater will go to pause mode when the coolant target temperature is exceeded by +10 °C (18 F) and it starts heating when the hot water temperature drops below the target temperature.
Summertime function can be turned on in two alternative ways.
Summertime will turn off the Matrix Heaters.

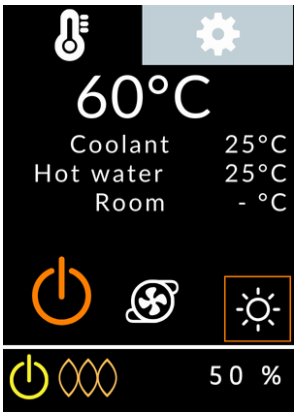	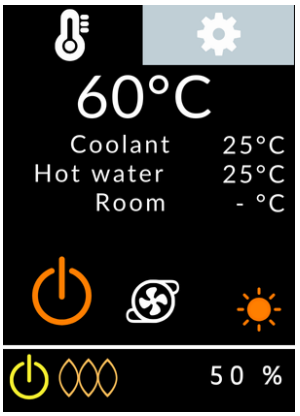	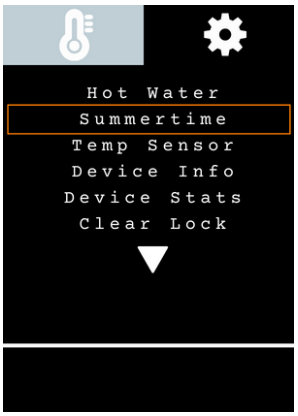	
Option 1 Use the **Arrow Buttons** (left or right) to move the orange selections square to the **Summertime Icon**.	Confirm the selection by pressing the **Select Button**. White icon turns orange.	**Option 2** Use **Arrow Buttons** to move the orange selection square to Settings from the main menu bar. Use the **Arrow Buttons** (left or right) to move the orange selections square to text Summertime. Press the **Select button**.	Use **Arrow Buttons** to select On or Off. Confirm the selection with the **Select button.**

Secondary coolant pump

Secondary coolant pump can be activated by selecting the Secondary coolant pump icon.

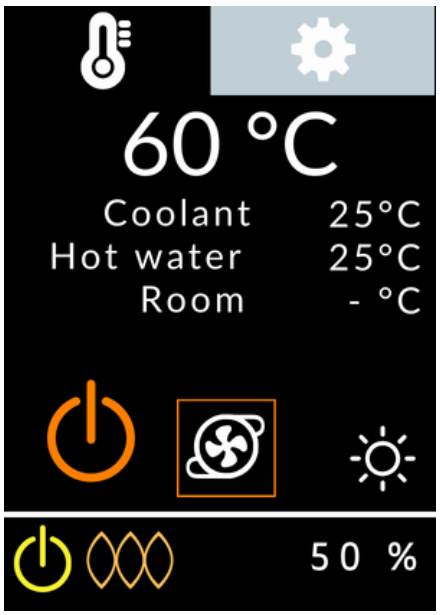	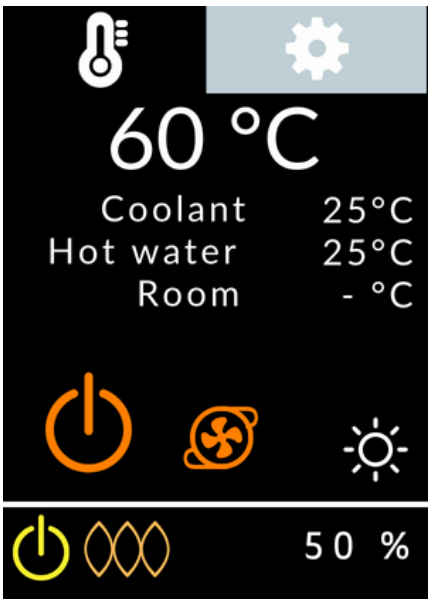
Use the **Arrow buttons** to move the selection square to the **Coolant pump icon**.	Confirm the selection by pressing the **Select Button**. White icon turns orange.

Shut down

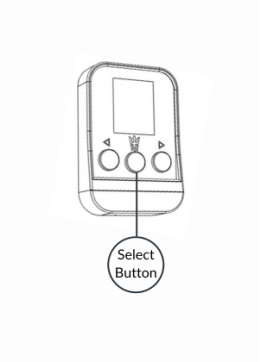	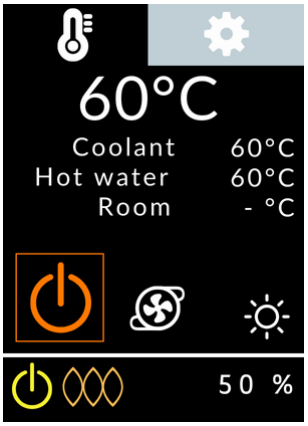		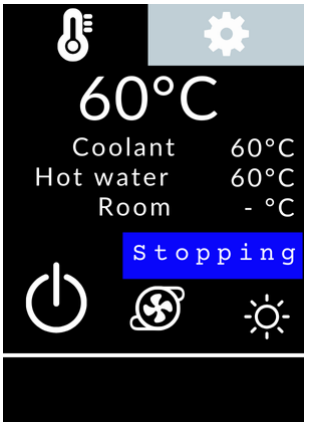
Option 1 Quick shut down: Press and hold the **Select Button** down for more than 4 seconds. *Stopping* will appear and the Power Icon light will change to white indicating the unit is off.	**Option 2** Alternatively use the **Arrow Buttons** to move the selection square to the **Start/Stop Icon** and press the **Select Button**.	Press and hold the **Select Button** down for more than 3 seconds and release.	*Stopping* will appear and the Power Icon light will change to white indicating the unit is off.

Note: The system mode that was used last upon shutdown will be the same mode when the heater is turned on again.

Settings

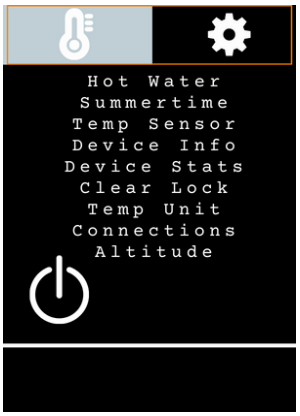		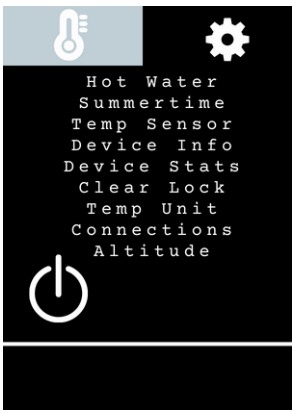	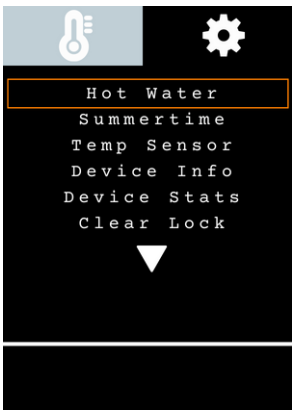
Move the selection square to the **Main Menu Bar** and press the **Select Button**.Use the **Arrow Buttons** to choose **Settings**. Press the **Select Button**.	Settings menu will appear.	Use the **Arrow Buttons** to move the selection square down and press the **Select Button** to choose.	Hot water target temperature setting.

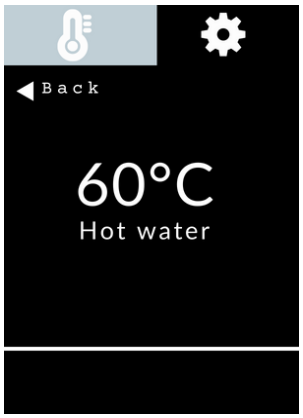	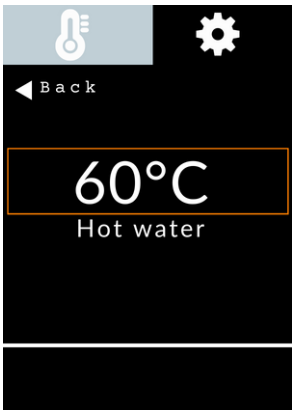	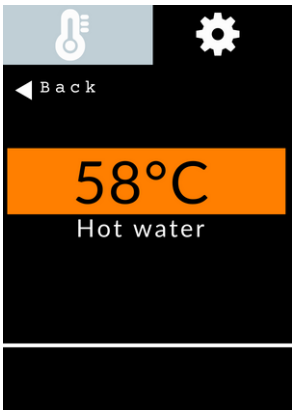	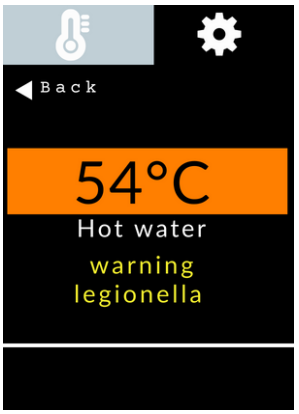
The latest target hot water temperature is shown on the display.	Move the selection square to the **Hot water target temperature** and press the **Select Button**.	Press **Arrow Buttons** (left or right) to set the desired hot water temperature.	If the hot water target temperature is set to 54 °C or below warning about legionella bacteria will appear.
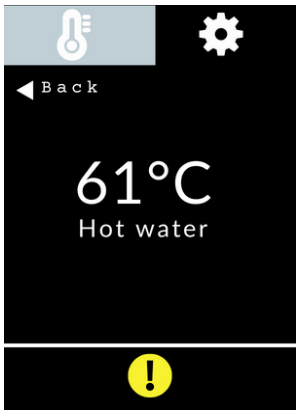	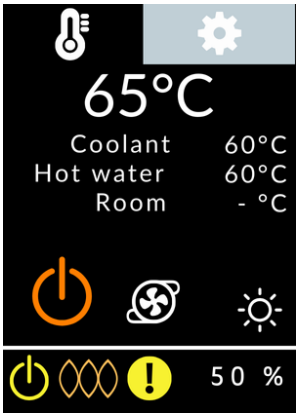	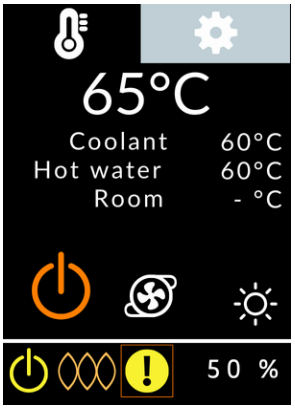	
If the hot water target temperature is tried to set higher than the coolant target temperature the **Exclamation Point Icon** will appear.	The same **Exclamation Point Icon** will appear also in Water heating mode.	Move the selection square to the **Exclamation Point Icon** and press the **Select Button**. An error Page will appear.	The **Exclamation Point Icon** will disappear when the user lowers the hot water target temperature (from the settings) below the coolant target temperature.

		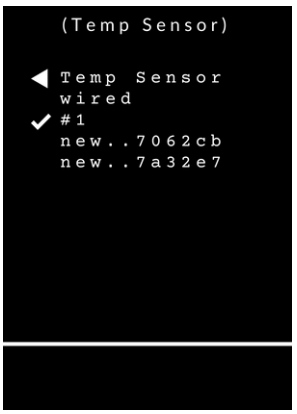	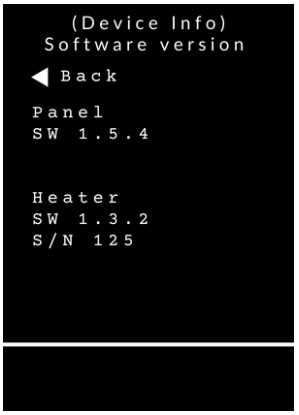
Use **Arrow Buttons** to move the orange selection square to Settings from the main menu bar. Use the **Arrow Buttons** (left or right) to move the orange selections square to text Summertime. Press the **Select button**.	Use **Arrow Buttons** to select On or Off. Confirm the selection with the **Select button.**	**Temp Sensor** - Choose the desired sensor to measure the indoor temperature with. - Wireless sensors are listed by sensor numbers - When a wireless sensor is selected, it gets a running number ID -Wireless sensor is used for displaying the room temperature	**Device Info** - Control panel and heater software versions (needed for customer service/tech help) - Heater unit serial number (needed for customer service/tech help)
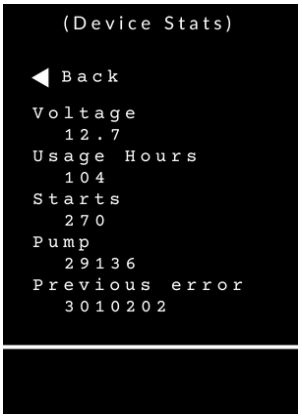	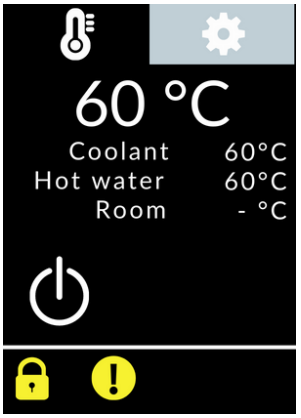		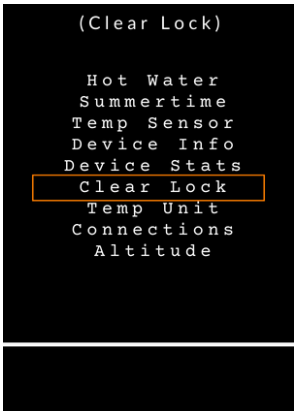
Device Stats - Check there is enough voltage to start the unit (must have at least 10 V) - Check usage hours - System starts - Pump cycles since new - Previous error code	If a **Lock Icon** is displayed, the heater has locked itself for safety. The heater will also lock after 3 unsuccessful starts. Move the selection square to the **Exclamation Point Icon** and press the **Select Button**. An error Page will appear.	If the heater has locked itself, there may have been a failure that should be investigated and resolved prior to further use. The error page will display a check list and a website for further information. If you need help, reach out to a professional.	To remove the lock, move the selection square to the **Main Menu Bar** and press the **Select Button**, choose **Settings**, and press the **Select Button**. Choose **Clear Lock** from the Settings Menu and press the **Select Button**.

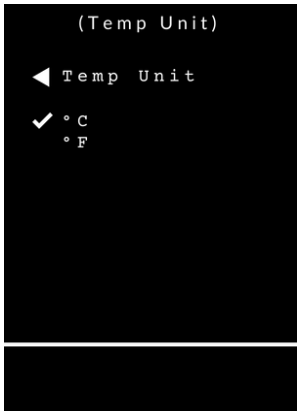	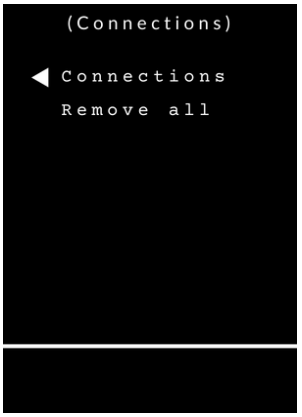		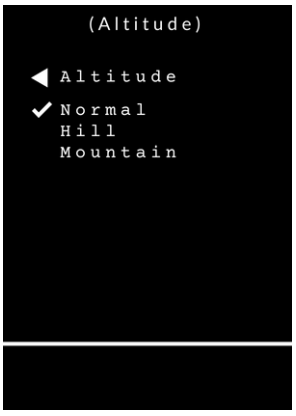
Temp Unit -select temperature unit Celsius / Fahrenheit	Connections - clear all paired mobile phone devices	Connections removed.	Adjust combustion in high altitudes. Heater operation can be optimized to different altitudes. Note! Altitude setting must be made before starting the heater.

Connecting with the Remote application

Local Connection

Advanced Control Panel can be connected into the mobile application with local connection. You can then operate your heater with the "**Wallas Remote**" application. First, download the "Wallas Remote" application to your mobile device from your application store.

Pairing the application with the heater/control panel

Mobile Device	Advanced Control Panel	Mobile Device	Advanced Control Panel
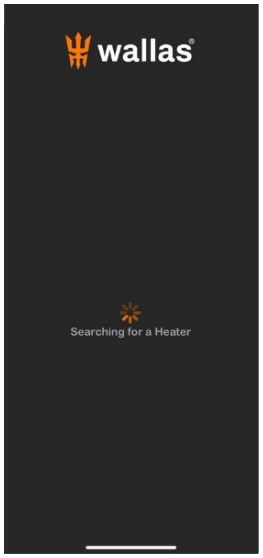	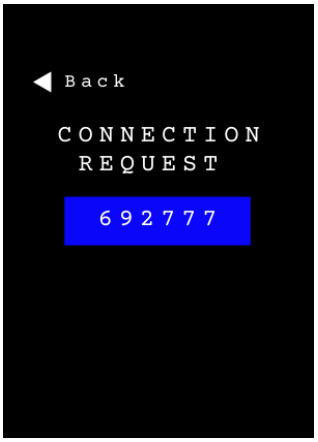	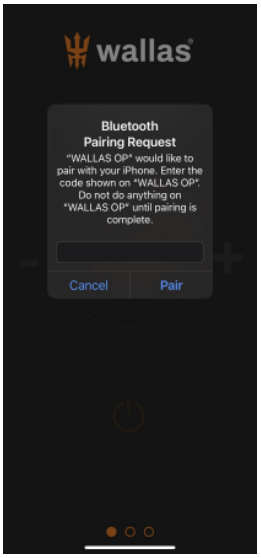	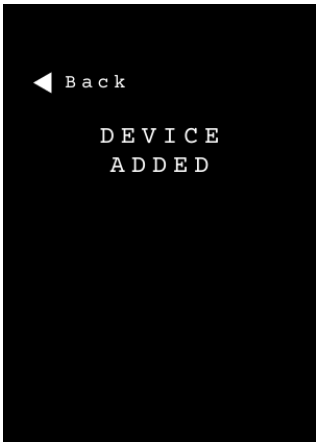
Turn the short range wireless connection on from your mobile device for pairing. When you open the app for the first time, it will search for a Wallas heater nearby.	When a heater is found , a pin code will appear on the screen of the Advanced Control Panel.	Type the pin code in the app and press **Pair** to continue. **Note!** In some phone models Pairing request will open in background info window.	Once the pairing has been successful, it is confirmed on the Control Panel with *Device Added*.

Advanced Control Panel	Advanced Control Panel	Advanced Control Panel	Advanced Control Panel
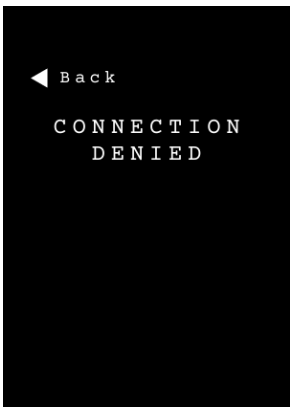			
If the connection was not successful, *Connection Denied* will appear on the Control Panel.	Use Arrow Buttons to go to the **Main Menu Bar** and press the **Select Button**. Go to the **Settings** and press the **Select Button**.	Choose **Connections** and press the **Select Button**. Select **Remove All** and press the **Select Button**.	Turn the app off, open it again and repeat the pairing process.

Ignition	Shutdown	Pause	Reset settings
	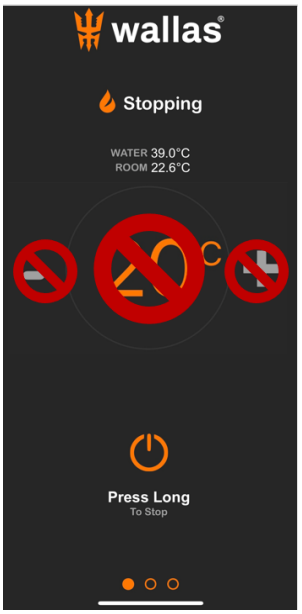	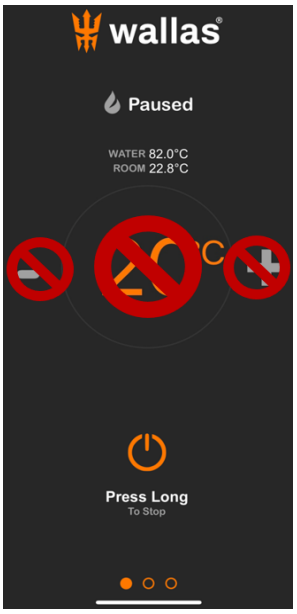	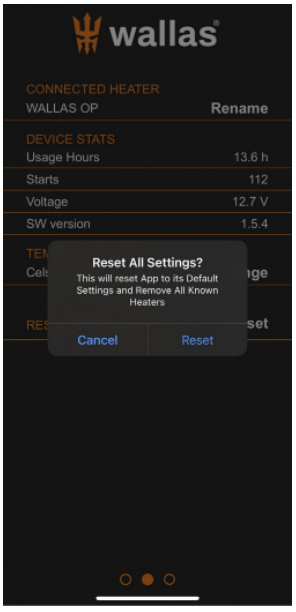
Press and hold the **Start/Stop Icon** down for 2 seconds to start the heater. *Starting* will appear on the screen. Orange combustion light will light up when the burner flame has been ignated and the combustion has stabilized (approx. in 5 min). Heater will be fully operational about 10 min later. Note! Coolant and hot water temperature changing from the application is not supported.	Press and hold the **Start/Stop Icon** down for 2 seconds. *Stopping* will appear and the Start/Stop icon will turn white indicating the unit is off. Note! Coolant and hot water temperature changing from the application is not supported..	Pause Mode automatically turns the heater off if the coolant target temperature is exceeded by +10 °C (18 F). If the heater is in Pause Mode, *Paused* will appear on the screen. The unit will start heating again when the coolant temperature drops 10 °C (18 F) below the target temperature.	Swipe the screen to the **2nd page.** Default settings can be returned by pressing Reset and answering Reset to the appearing follow-up question.

Mobile Device	Mobile Device	Mobile Device	Mobile Device
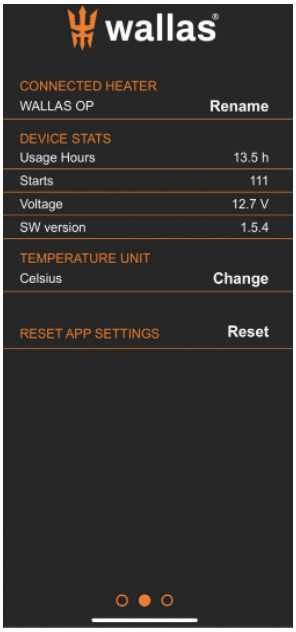	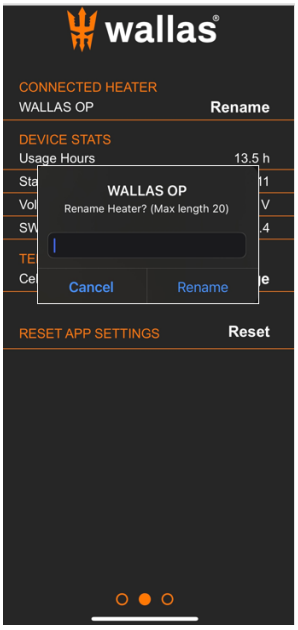	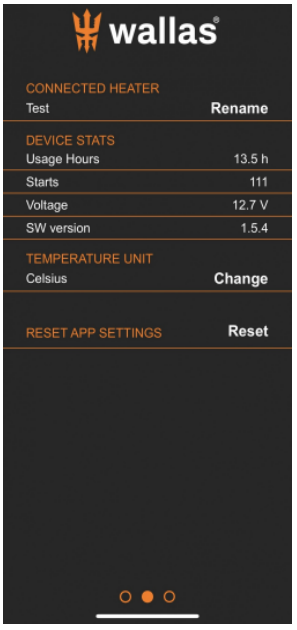	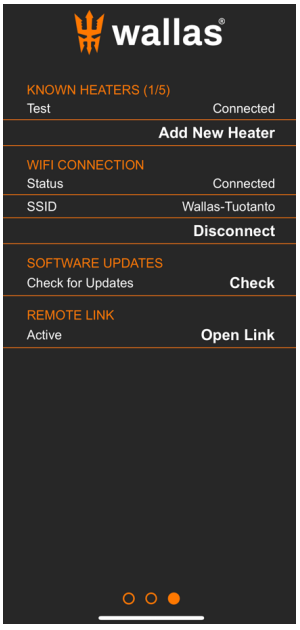
Swipe the screen to the **2nd page.** When the heater is connected for the first time it will be named by Wallas OP.	Each heater/connection can be renamed (max 20 characters).	User can add new heater and repeat the pairing process with the new heater.	Swipe the screen to the **3rd page.** Application supports up to 5 different heater connections. It is also possible to pair same heaters with another mobile device but only one active user (active connec-tion) is possible at a time.

WiFi Connection

The 3009 Control panel can be connected to the internet with a WiFi connection.

You can then operate your heater with the " **Wallas Remote**" application through the Internet.

Wifi connection is created through the Wallas Remote application. (Local connection between application and Control Panel must be available before setup)

The first time selecting Connect, the application will ask for SSID and Password. Application will share this information with Control Panel.

NOTE! "Open" WiFi or "no-password" networks will not work with the Wallas system.

NOTE! If you sell your heater or give it away, you need to clear WiFi settings. (SSID="empty", password="empty") and you should remove the Wallas application from your device.

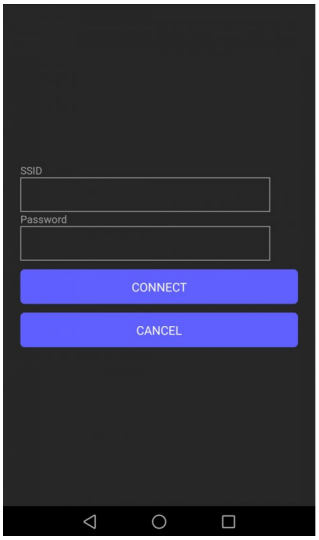	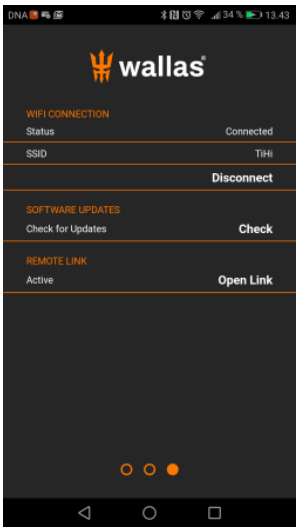		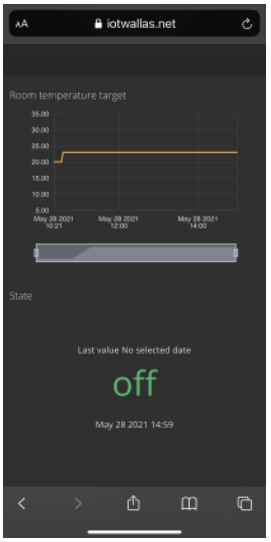
Feed your internet connection details.	When internet connection is finalized status will be "connected". After few minutes " REMOTE LINK" will appear .	"REMOTE LINK " display will connect to internet panel. You can : - set room temperature target - start /stop your heater Note: heater start and stop takes several minutes.	You can see when heater was last connected into internet, and what the heater state is. You can see some statistics of your heater. Available graphs will vary depending of your heater model.

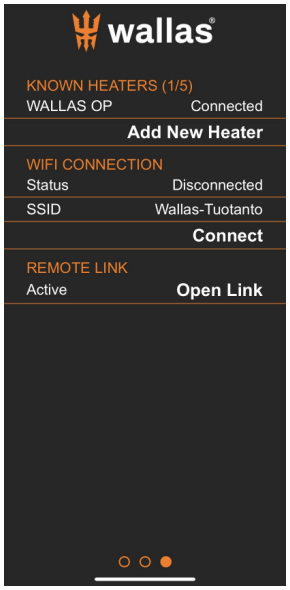	
When you start application and heater is not in range you can operate heater by opening the "Remote Link".	Note! Before you can operate heater, you need to read safety warnings and agree.

Wallas-Marin reserves the right to develop usability and features of the application.

Connections tips:

1. Read from your mobile device user guide how connections and WiFi connections are managed in your device.

2. Make sure that local connections and WiFi are allowed in you mobile device (airplane mode is OFF).

3. Your mobile device is not in power save mode and location permission is given to Wallas application.

4. Check that heater is connected to power and Control panel is connected via cable to the heater.

5. Distance between Mobile device and Control Panel is not too long.

6. Control Panel is not in use by another person. Only one local connection is possible at a time.

7. If your mobile device already has connection to the heater it can not create new connection before the old connection is removed from your device. In some phone models this has to be made manually. Remove "WALLAS OP" from your phones paired short range wireless connection devices list (note there might be several OP pairings in mobile device list, remove all) and restart short range wireless connection before new pairing is possible. This may be the case if control panel pairing code only blinks fast and your mobile device is repeating the connection requests.

8. Change connection to other Wallas heater.

- Close Wallas remote application.
- Remove old connections from your mobile device short range wireless connection paired devices list. Restart your devices short range wireless connection.
- If there is no other users for new Wallas heater you can select Control panel menu Settings/Connections/Remove all.
- Restart application.
- When/if "Change Device " link appears (30-60 sec) press the link.
- Wait connection procedure to finalize.

9. In some phone models Pairing request will open in background info window. (See your mobile devices user guide.)

Software update

It is recommended to check software updates and perform software updating regularly to ensure optimal performance of the device.

Preparations for software update
1. check that the device and the cell phone have sufficient level of power in battery 2. check that the WiFi signal is strong and the internet connection is reliable 3. be prepared to disconnect control panel cable, or power of the device to make master reset to the system if necessary

!	**Software update is a complex process, and errors may happen if there is a power or network failure during the update, including complete system failure. Therefore it is forbidden to start software update for control panel if the Wallas heater is the only heat source and being unable to start heater would create a danger.**

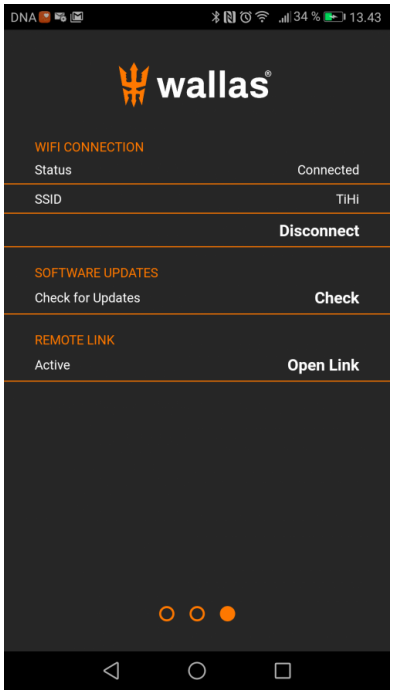

For software update make sure that
• WiFi signal is strong and the internet connection is reliable
• WiFi HotSpot name (SSID) is visible in application page and the status is "Connected"
• the heater is "OFF" before starting the update
Updating may take up to 6 minutes, depending on network and connection.

If new software version is available *Update link* will appear on the screen.
Select update.
Do not close application or power from the heater/stove while update is ongoing.
Control panel display will close and start a few times during the update.
After the update is done, control panel will start and application will reconnect to panel.
Note: In some phone models you may have to do the pairing again after software update.

Possible problem/error	Solution
File error message appears	Start update again after few minutes
Software update stops during download	1. Close the application 2. Restart the short-range wireless connection from your mobile device 3. Start update again
	Tip! Find different location, where WiFi signal is better or WiFi hotspot has a better connection
Control panel is jammed	Disconnect panel cable and try again after few minutes

Error Codes

Possible error codes are listed on the table below.

Combined Code	Error message	Problem	Troubleshooting
10A06	Ignition failed	Ignition failed, maximum allowed number of pump pulses	Check the fuel, check the fuel filter, tighten all joints.
1020B	Low voltage	Supply voltage is below minimum	Renew/charge the battery.
10001	System error		Contact service
10003	System error		Contact service
10201	System error	Unexpected flame-out	Check the fuel level, check the fuel filter.
10206	Ignition failed	Preheating failed, residual fuel burning for too long	Try to start again, if same fault, contact service.
20005	System error		Contact service
20A0207	System error	Water thermostat is missing water temperature data	Contact service
20B0205	System error	Analog control (potentiometer) is missing	Connect the controller, check control panel wiring.
203020A	Ignition failed	No fuel was detected, maximum allowed number of pump pulses	Check the fuel, check the fuel filter, tighten all joints.
2010204	Combustion fan	Burner fan is not working (no tachometer signal)	Contact service
2020204	System error	Ventilation fan is not working (no tachometer signal)	Contact service
2030204	System error	Fuel pump output short-circuit	Fuel pump wires are in shortcut, check the wiring.
2030205	System error	Fuel pump not connected (no current detected on output)	Fuel pump is missing, connect fuel pump connector.
2040205	Water pump	Water pump is missing (no load on output)	Connect the water pump connector.
2050204	System error	Burner or ventilation fan power short-circuit	Contact service
2060204	Glow plug	Glow plug short-circuit	Renew the glow plug.
2060205	Glow plug	Glow plug missing (no current detected on output)	Renew the glow plug, check that the glow plug connector is connected to the ECU.

2070005	System error		Contact service
2080001	System error		Contact service
2080006	System error		Contact service
2080008	System error		Contact service
2080208	System error		Contact service
3000007	Burner temp sensor	Burner temperature is missing/invalid	Contact service
3010007	Air temp sensor	Air temperature is missing/invalid	Connect air temperature sensor.
3010202	Air overheat	Air temperature is too high	Check air vent´s and warm air hoses for blockages.
3020004	Warning	Hot water target should not be set higher than coolant target	Adjust the hot water target from settings
3020007	Water temp sensor	Water temperature is missing/invalid	Contact service
3020202	Coolant overheat	Coolant temperature is too high	Coolant is not circulating, bleed the air out of the system, check the coolant pump.
50001	System error	CAN bus other errors	Contact service
50006	System error	CAN bus timeout error	Contact service
50008	System error	CAN bus busy error	Contact service
7020B	Low voltage	Cannot start, low voltage	Renew/charge the battery
7020C	System error	Cannot start, device locked	Open locking mode from the control panel, check control panel user manual.
7020D	System error	Cannot start, enable input not asserted	Enable wire is missing, connect the enable wire or set the main power ON
7020E	System error	Cannot start, burner temperature missing or too high	Powercut during the operation, Wait that unit cools down and try to start again.

Installation check list

Installation check list before test-run

Installation
• Read manual and use only official Wallas parts. • Ensure that the boat/cottage/location is sufficiently ventilated. • Ensure sufficient air ventilation for heater, minimum aperture of 100 cm² (16 sq.in.) into installation area. • In boat heaters the exhaust pipe outlet must be at least 400mm(16”) away from the opening for filling fuel or tank breather. • We recommend installing the control panel on a vertical surface where liquids are not able to leak into the switch and it is out of reach of children.
Fuel system
• Fuel for the device comes through a separate tank fitting, not via a manifold or connection shared by the engine or other device. • Install the filter to the fuel hose before you install the device, in an accessible location for filter changes. • Fasten the fuel hose couplings tightly. Always use a sleeve joint on the hose (olive ring). • Make sure that the surfaces of the couplings are clean before fastening them. • The hoses must be kept clean during installation. • If the surface of the fuel tank is above the device, a magnetic valve must be installed into the fuel hose close to the tank. • Cut the fuel hoses to the appropriate length when installing them.
Electrical installation
• The nominal voltage of the device is 12 VDC. • Current for the device is taken directly from the battery terminals using cables that are as short as possible. • Put the main fuse of c. 15 A on the + cable close to the battery.
Exhaust
• Make sure the inner exhaust hose (**1028**) is longer than the outer in both ends. • If there is a possibility for water to enter the exhaust hose, use a drainage lock (**2471**) and always make a goose neck in the exhaust hose. • The exhaust lead through must be installed at least **400mm** from fuel fill cap and fuel breather nozzle, **500mm** over the water line and far away from any fresh air intake. • If the heater is used in extreme conditions (extreme cold or heat), consult a local Wallas-dealer on installation. • Use only lead-throughs approved in this manual. Wrong exhaust lead through may lead to dangerous gasses entering the heater and/or living spaces. • Do not insulate coaxial exhaust hose entirely. Only insulate parts of the hose that touch flammable materials. **Insulating the whole hose damages burner fan**. • The exhaust pipe must not come into contact with combustible materials. Insulate the exhaust hose with heat insulation sock (1050), only if it is necessary.
Exhaust fumes
• When choosing the outlet location, note that exhaust fumes are hot. • In boat heaters use a goose-neck in exhaust pipe to prevent splash water entering. • If your installation location is a boat with metal hull, the device and outlet must be insulated from the hull to prevent electrochemical corrosion. • The exhaust pipe must not come into contact with combustible materials. Insulate the exhaust hose, if necessary.

Warm coolant hosing
• Flow direction is correct • All hoses are rising from the lowest point to higher (if not possible then use bleeding valves) • There are no leakages in the system • Header tank is large enough • System contains enough coolant to prevent freezing • System is bleed correctly • Hoses are coolant resistant material
Water hosing
• Accumulator tank is installed if necessary • Mixing valve must be installed if Wallas on-demand hot water accumulator is used • Fresh water maximum usage pressure is 3 bar. **Do not attach to water supply network without pressure reducer.** • Use purposed hot and cold fresh water pipes/hoses only
Initial start-up
• The device usually does not start the first time after it has been installed. It may take several starts (c. 4-6) for the fuel hoses to fill up enough for the fuel to reach the burner. • Watch the hoses as they fill up as you start the device. • After two unsuccessful start-ups, the device will lock. • Follow the instructions for unlocking the device and try again. • When the device starts, look for possible leaks in the exhaust and fuel connections. • Run the device for c. ½ hour to allow possible installation and manufacturing greases to burn off. Make sure there is enough ventilation. • **Remember to carefully read the instructions for installing, operating and servicing each device before installation.**

!	**In metal-hulled boat**, you must ensure that the device, the flue gas lead-through, the fuel connection, the control panel and all other parts are insulated from the boat's hull. This must be done to prevent electrochemical corrosion and to prevent voltage from being transmitted from the hull to the device or vice versa during electrical faults.

To be filled in by the installer

Test-run performed	
Serial number	
Company	
Installer	
Installation date	
Signed	

Maintenance recommendations for water heaters

!	Service recommendation for the heater is about 5000 operating hours, depending on the fuel used.
!	Maintenance should be carried out by authorized Wallas service shop.
!	Protect the water system from freezing conditions. See detailed instructions below (winter storage).

Special recommendations
Monthly use of the device will increase reliability by purging old fuel. Observe fuel provider recommendation with regard to the fuel type, fuel life lenght, additives and moisture removal. If the device has a separate tank: When selecting the fuel type, take note of the temperature limits of each particular fuel.
Removal of the water from the tank
Isopropanol based anti ice detergent meant for gasoline cars (no ethylene or methyl based) can be added to the fuel during the season. It is useful to make the addition after each couple of tanks and in the beginning and end of the heating season. The anti ice detergent binds the condensed water and prevents the sediment and contamination during the summer. For the dosage, observe the recommendations given by the manufacturer of the agent.
Winter storage
If the device uses the same tank as the engine: • Change the fuel filter. • Perform measures recommended by the boat/engine manufacturer to be performed before winter storage. If the device has a separate tank: • Drain the fuel tank in the autumn. • Clean the tank and change the fuel filter. • Fill the fuel tank with fresh and clean fuel in the spring. For the device itself, you do not need to do anything. The fresh water should be emptied during freezing conditions. The emptying process should be done by pushing compressed air to the fresh water pipes for winter. The coolant is not needed and not recommended to be changed for the winter. Follow the instructions of the coolant manufacturer's change interval.
Spare parts
Spare parts list, www.wallas.com

!	**An anti-freezing agent for diesel vehicles may increase the forming of scale at the bottom of the burner and therefore shorten the maintenance interval.**

Warranty terms

Wallas-Marin Oy (the “Manufacturer”) warrants their heaters, stoves, and ovens (hereinafter referred to as the “Product”), against defects in material and workmanship for two (2) years or 2,000 operating hours in normal use (whichever comes first) effective at the time of sale to the Original End-User under the conditions provided herein.

Wallas-Marin heating systems are designed and intended for recreational use. Use for commercial, live-aboard or unattended use will result in elevated operating hours requiring maintenance and repair not covered by product warranty.

1)	This warranty is made only to the first purchaser/customer (“Original End-User”), who acquires the Wallas-Marin Product for their own use.
2)	This warranty will be in effect for two (2) years or 2,000 operating hours (whichever comes first) from the date of purchase by the Original End-User. A copy of the dated receipt of the sale should be retained as evidence of the date of purchase. The warranty period may be extended by an additional 12 months by registering the Product within three (3) months of the Product being sold to the Original End-User. Registration must be done online at www.wallas.fi/takuu. Despite the extended warranty period, coverage is limited to 2,000 operating hours for all Products. Repairs carried out during the warranty period do not renew or alter the original warranty period.
3)	The intent of this warranty is to protect the Original End-User of the Product from defects and provide repair and replacement of defective parts. Warranty repair service must be administered by an authorized Wallas-Marin distributor or an authorized Wallas-Marin Service Center in accordance with the Wallas-Marin warranty policy.
4)	Notification of the defect must be given in writing immediately to the authorized Wallas-Marin distributor, that sold the product (the “Seller”) by the Original End-User, if possible, but no later than two (2) months after the defect occurred. If the warranty period has expired and no notice was given in writing while the warranty was still valid, the defect will not be covered.
	The notification must include: • Description about the issue • Description about the installation, when, where, and by whom it was done (photographs may be included) • Product name, serial number, place and date of purchase
5)	For repairs under warranty, the Original End-User must take or package and ship the product to an authorized Wallas-Marin Distributor or to an authorized Wallas-Marin Service Center. The best location for repairs is determined by the importer after the Original End-User has notified the Seller about the issue. Once the Wallas-Marin Distributor/Service Center has examined the returned Product and if it is found that it was defective in material and/or workmanship, the Distributor/Service Center shall repair the product. If the distributor/Service Center determines that repairs must be made, only authorized Wallas-Marin parts will be used.
6)	This is a Return to Base Warranty, which does not cover costs accumulated from the removal and re-installation of the Product, or transportation costs if the Product has been shipped for repairs, or any damage occurred in transit.
7)	This warranty does not cover consumable or wear parts, which include glow coil/plug, bottom mat or wick, fuel filter, seals.
8)	This warranty does not limit the rights specified in the consumer protection legislation.

9)	This warranty does not cover indirect damages arising from a defective Product, property damage, loss of revenue, injury or loss of life as a result of system failure, or conditions unrelated to the material and workmanship of the Wallas-Marin Product.
	Such unrelated conditions include, but are not limited to: a) The Product has not been installed according to the Wallas-Marin Product User Manual or the country-specific regulations have not been followed. b) Damage or failure caused by installation of accessories or components not manufactured or approved by Wallas-Marin and/or modification of the Product structure without the consent of the Manufacturer. c) Failure to follow the operation or maintenance instructions in the Product User Manual. d) Damage caused by inappropriate storage or transport. e) Fault resulted by an accident or damage of which Wallas-Marin had no control over (force majeure). f) Damage or failure caused by improper handling, use of unsuitable fuel, low voltage, excess voltage, dirt, water penetrating the Product, galvanic corrosion, electro chemical corrosion or damages due to stray current. g) The Product has been dismantled or opened without the explicit permission of the Manufacturer/Importer. h) Non-Wallas components or spare parts have been used in the repair of the Product. i) Repair was done by an unauthorised service provider. j) Installation error when possible leaking water or leaking coolant can enter the boat/vehicle/RV/building structures.
10)	Wallas-Marin is not responsible for any damages to a boat/vehicle/RV/building or property due to Wallas unit is/is not working properly whatsoever.
11)	Wallas-Marin reserves the right to change the design of any Wallas-Marin Product without notice and with no obligation to make corresponding changes in Wallas-Marin products previously manufactured.

!	**When making a warranty claim, the Original End-User must provide proof that the maintenance and safety instructions have been thoroughly followed. This warranty does not apply to defects which have risen due to carelessness in following installation, operation, and maintenance instructions.**

Disclaimers

The manufacturer is not liable for damage caused by improper use or incorrect operation or installation. Failure to comply with the installation, operation and service instructions makes the warranty null and void and this leads to the exclusion of any liability of Wallas-Marin Oy.
The manufacturer does not cover any indirect damages arising from a Product, property damage, loss of revenue, injury or loss of life, or conditions unrelated to the material and workmanship of the Wallas-Marin Product. Such conditions include, but are not limited to: colder-than-expected weather or instances where the Product fails to maintain the temperature, leading to frozen water pipes and subsequent leaks, ruining the property of the user.

Wallas-Marin Oy
Kärrykatu 4
20780 Kaarina, Finland
www.wallas.com

We reserve the right to changes.
Oikeudet muutoksiin pidätetään.
Vi behåller rätten att göra ändringar.