wallas®

CAMPER / MARINE

DIESEL HEATING AND COOKING





1200FF

2,2 kW | Stove-Heater Combination

Power:	1000-2200 W
Operating Voltage:	12 V DC
Fuel Consumption:	0,1-0,22 l/h *3.41 - 6.8 oz/hr*
Electricity Consumption:	1,0-1,3 A
Dimensions:	L 515 mm / *20 9/32"* W 313 mm / 12 21/64" H 163 mm / 6 27/64"
Weight:	*15,2* kg / *33,5 lbs.*

Flush mounted version of 1200 DUO



All-In-One device
With the blower lid **lifted up** operates as a forced air diesel **stove** and with the blower lid **lowered** as a diesel **heater**.

1200FF is **gas-free cooking and heating solution**. No need for gas lines and yearly inspections any more.

Ceramic cooktop is **easy to keep clean**.

Due to the patented thermal layer in the lid, **the surface stays cool** even on full power. This improves the safety on every journey.

Left side of the cooking top is **for boiling** in higher temperatures, **right side** is **for simmering** at a slightly lower temperatures.

Unrestricted use in marinas and camping areas.

State-of-the art flat facet ground surface gives **a fresh and modern look.**

The blower lid sits flush with the countertop when the lid is closed increasing the countertop space in smaller kitchens.

Premium advanced electronical solutions enable **remote updates**, diagnostics and resolution of hardware-specific issues.

With the blower lid lowered, the unit operates as a heater producing dry heat, which keep the windows condensation-free and the furnishing fresh.



2-IN-1 DEVICE

100% GAS FREE SOLUTION

EXTREMELY SMOOTH DESIGN

AIRCOOLED AND SAFE LID

wallas NEW

INSTALLATION

Due to the patented thermal layer in the lid, the surface stays cool even on full power taking safety to the next level.

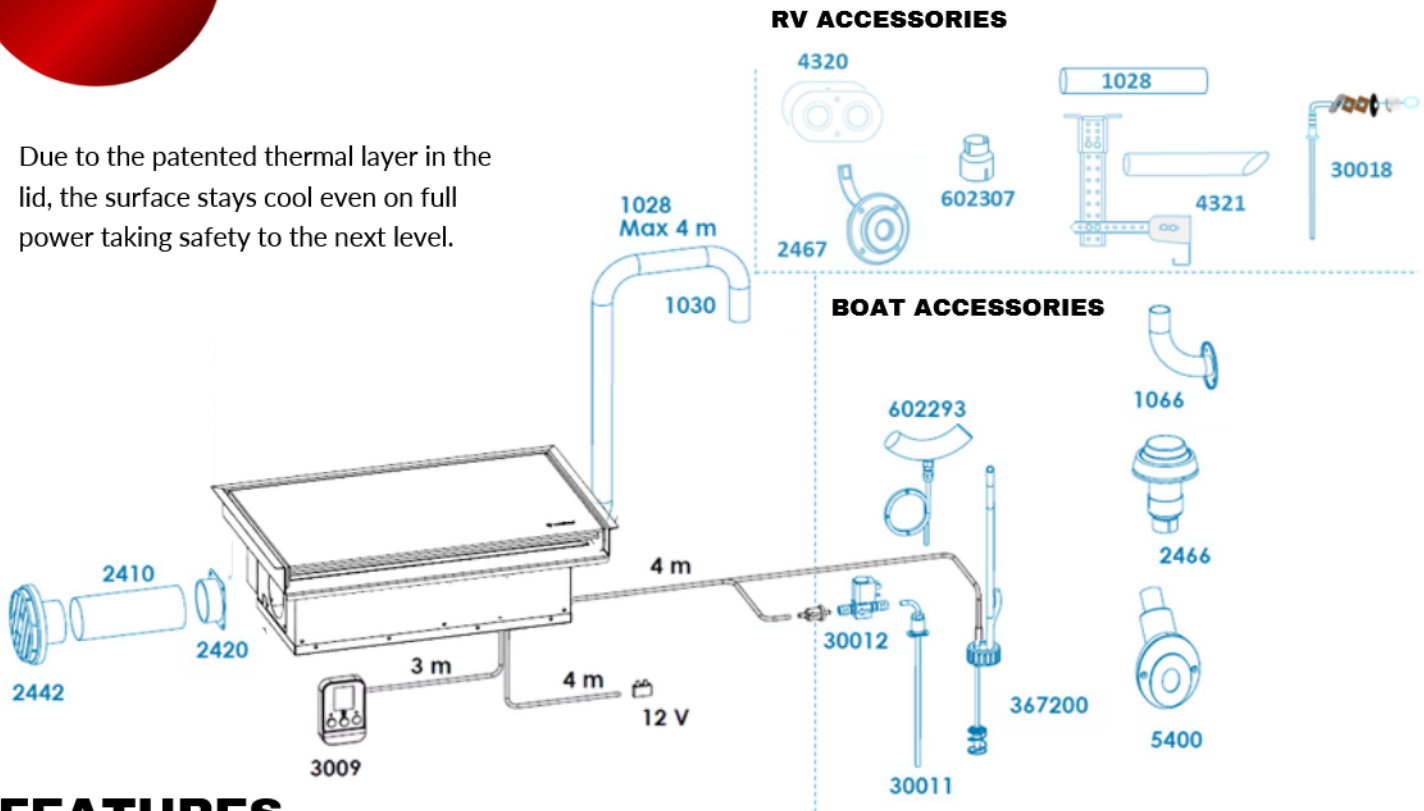

FEATURES

- Unrestiricted use in camping areas and in marinas.
- Low consumption in diesel and electricity.
- Warranty 2+1 years
- Blowerlid protects touching any hot surface. Lid itself is air cooled and safe.

3008 ADVANCED

THERMO | Control Panel

- Simple start with a press of a button
- Six power settings for temperature (1-6)
- Easy-to-read digital display



MADE IN FINLAND

CERTIFIED ISO 9001:2015 COMPANY

Accessories in black come with the standard package. Accessories in blue are additional/optional. All rights reserved. Wallas-Marin reserves the right to change or improve its products and to make changes in the content of this brochure without obligation to notify any person or organization of such changes or improvements. Go to www.wallas.com for current updates and supplemental information concerning these products.