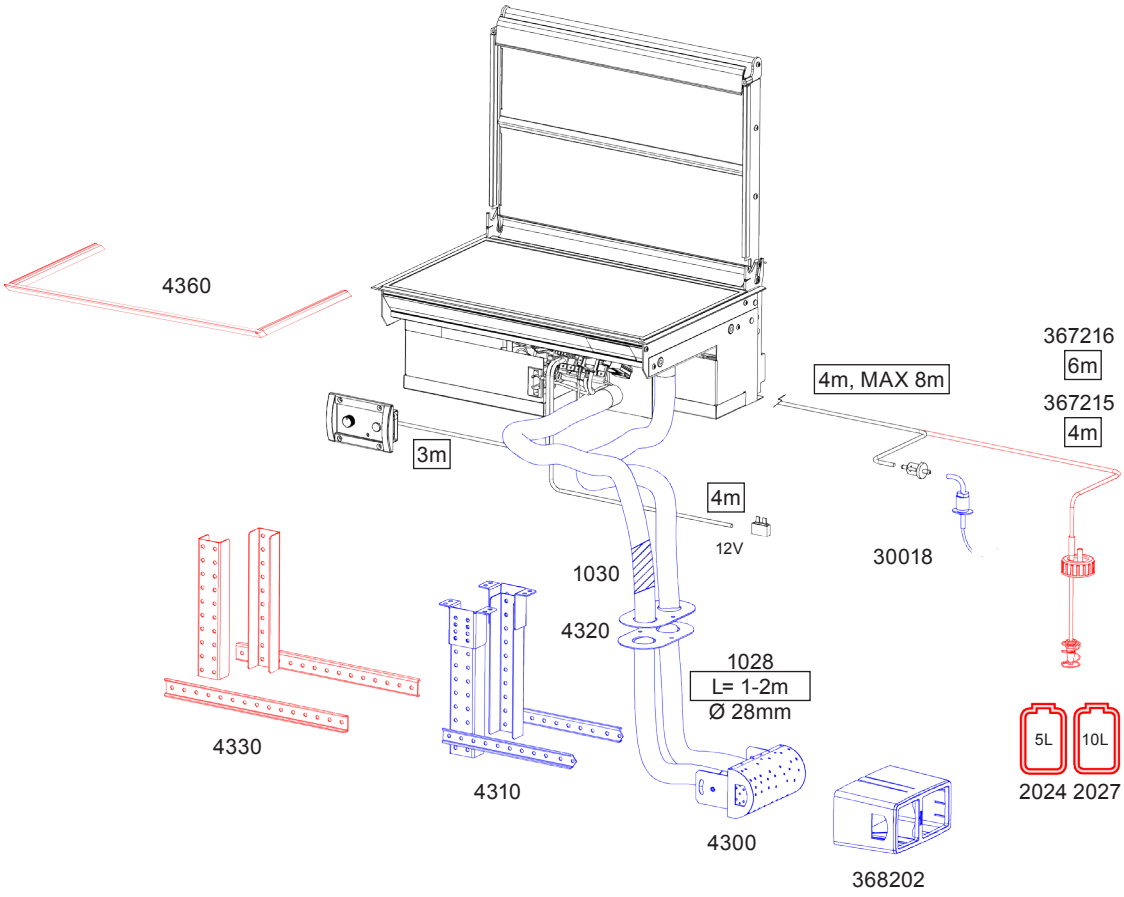

Standard delivery ■ | Installation accessory ● | Special installation ○ | Accessory ✳

Supplies and accessories

		XC Duo
4300	Exhaust head	●
4310	Bracket set	●
4320	Cover plate kit	●
1028	Exhaust tube Ø 28 mm inox	●
1030	Heat insulation Ø 30 mm, Fiber glass	●
4350	XC Duo Installation kit	●
30018	Tank fitting, Cu	●
367215	Tank feed through, diesel, 4 m	○
367216	Tank feed through, diesel, 6 m	○
1102	Fastening equipment for the upper part of the stove	○
4330	Extension kit for bracket set	○
368202	Plastic cover for exhaust head	●
1150	Toasting grill	✳
2024	Fuel tank, 5 l	○
2027	Fuel tank, 10 l	○
4360	Frame set for stove	○

Package contents

XC Duo		
1 pcs	Stove **XC Duo**	
1 pcs	Power cable with connector and integrated fuse 15 A (4m)	
2 pcs	Steel fastener	
1 pcs	L-shape profile	
1 pcs	Accessory bag **17735**	
	4 pcs	Screw for iron fastener M6 x 12
	4 pcs	Fastening screw M6 x 30
	4 pcs	Locking nut M6
	4 pcs	Cover plug
	2 pcs	Hose clamp 20 - 32 mm
	1 pcs	Plastic holder, 15 mm
	1 pcs	Fastening screw 3,9 x 16
1 pcs	Control panel package **361070**	
	1 pcs	Control panel
	1 pcs	Extension collar
	1 pcs	Control panel cable, 3 m
	4 pcs	Control panel fastening screws 3,5 x 20 mm (black) TX 10
	4 pcs	Control panel fastening screws 3,5 x 40 mm (black) TX 10
1 pcs	Installation, operation and maintenance instructions	

4350		
2 pcs	Exhaust tube Ø 28 mm inox, 2 m **1028**	
1 pcs	Heat insulation Ø 30 mm, Fiber glass, 1,5 m **1030**	
1 pcs	Exhaust head **4300**	
	1 pcs	Exhaust head
	1 pcs	Plastic cover for exhaust head **368202**
	4 pcs	Fastening screw M5 x 10
	2 pcs	Locking nut M5
	2 pcs	Washer M5
	2 pcs	Hose clamp 20 - 32 mm
1 pcs	Bracket set **4310**	
	2 pcs	Mounting bracket
	2 pcs	Bracket profile
	2 pcs	Exhaust head bracket
	8 pcs	Fastening screw M5 x 10
	8 pcs	Locking nut M5
	8 pcs	Sheet metal screw 4,8 x 13
1 pcs	Cover plate kit **4320**	
	2 pcs	Cover plate
	4 pcs	Sheet metal screw 4,8 x 13

Stove operation

The **XC Duo** is a safe diesel stove with no open flame. The stove is equipped with a single burner which burns either diesel oil or light furnace oil (diesel heating oil). The stove takes the air needed for the burning process from outside of the vehicle with a combustion air blower and discharges the resultant exhaust outside of the vehicle.
The fuel pump in the stove dispenses fuel, and the electronics control the combustion air and the amount of fuel automatically to keep the flame of the burner clean. When the stove is first switched on, the glow plug in the burner ignites the fuel that has been pumped into the burner. The glow time begins and ends automatically. The heat sensor in the stove detects the heat of the flame and lights the red LED light to signal that the flame has been ignited.
The heat which is released as the fuel burns is transferred into the ceramic stove top. The left side of the stove top is hotter, as the burner is located under it. The power of the stove can be adjusted steplessly. The control adjusts both sides of the stove simultaneously.
When the stove is switched off, a cool down cycle begins. The cooling function ventilates the burner and discharges the exhaust gases generated during cool down outside the vehicle.

The stove lends itself extremely well to cooking and heating all kinds of foods. It has been manufactured entirely from stainless and aluminium materials.

Function as a heater

By lowering the blower lid to the horizontal position, the stove works as a cabin heater.
Adjustment of heat control works either manually or with the help of control panel built-in thermostat.

Technical information

Fuel	Diesel oil, light furnace oil (diesel heating oil)
Operating voltage	12 V DC
Consumption	0,09 - 0,18 l/h
Heating power	900 - 1800 W
Power consumption	0,55...0.85 A (when ignited ca. 5-10 min. 8 - 10 A)
Measurements	456 x 343 x 208 mm
Weight	~ 12 kg
Max. permissible length of the flue gas pipe	2 m
Max. permissible length of the fuel hose	8 m
Minimum size of the replacement air opening	100 cm^2
Suitable flue gas lead-throughs	**4300**

Things to note when selecting the installation location

When installing the device, bear in mind that the device must be detached for maintenance. Therefore, it is advisable to make the connections easy to open and disconnect.
The stove should be installed level. The inclination should not exceed 5° with the standing level. While the device may not be damaged if it is temporarily tilted to a steep angle while running (even for some hours), the burner will not yield optimal performance while inclined.
The control panel should be installed in a vertical surface, away from sources of heat or cold (for thermostatic function) and within the 3 meter control harness length.
The stove should not be installed on top of a refrigerator. The stove will heat its surroundings and thus decrease the power of the refrigerator.

We recommend that the device be installed by an authorised Wallas Dealer.

Things to note when installing pipes, hoses and cables

Power cables and fuel hoses must be protected in locations where they are susceptible to mechanical damage due to sharp edges or heat.



If possible, install the control panel on a vertical surface.

The necessary installation tools







5 mm



Ø 2 mm
Ø 5 / Ø 6 mm
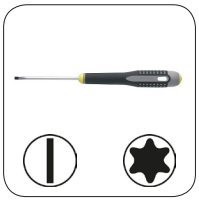
6,5 mm TX 10

7 mm
8 mm x 2
10 mm
12 mm


Ø 43 mm

Stove installation

Saw a cut-out (see picture) for the stove and the control panel in your chosen location.
The length of the control panel cable is 3 m.

Please pay attention to all numbered items!

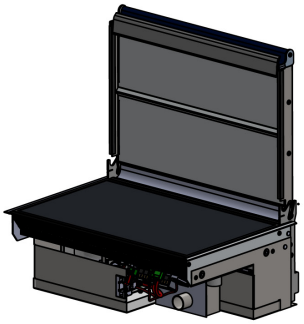

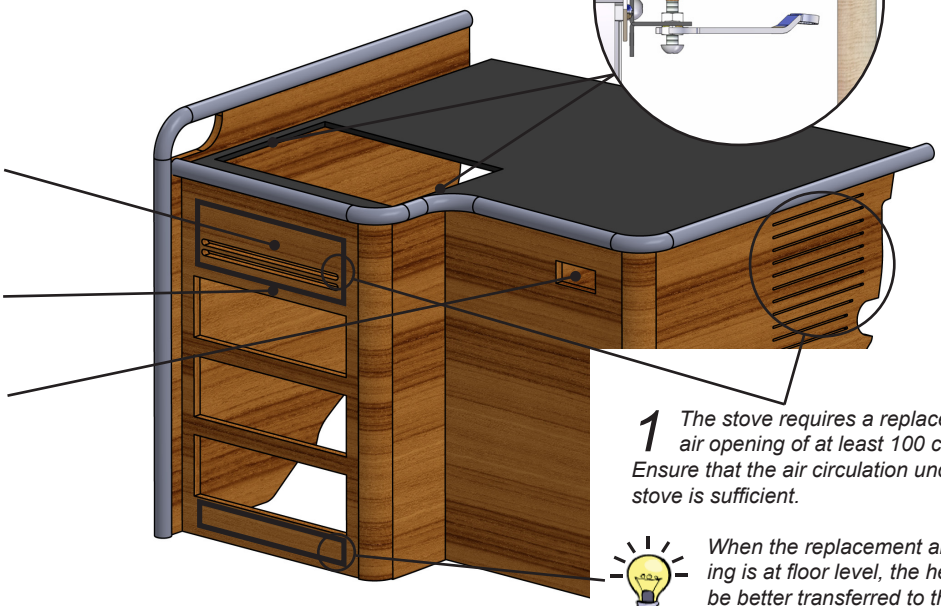

You can also fabricate a detachable panel to go in front of the stove. This will facilitate installation and maintenance.

2 Ensure that there is sufficient space under the stove for cables and hoses.

3 The control panel should be installed on a vertical surface.

Note! The unit dissipates heat to its surroundings, and the control panel thermostat and Sun Switch. will not operate as planned if installed too close to the unit.
Select the location for the control panel to suit the intended use.

4 Ensure that there is sufficient space between the stove and the vertical surface to facilitate installing and detaching the device.

1 The stove requires a replacement air opening of at least 100 cm². Ensure that the air circulation under the stove is sufficient.

When the replacement air opening is at floor level, the heat will be better transferred to the floor level.



5 Glue the L-shape profile to the edge of hole.

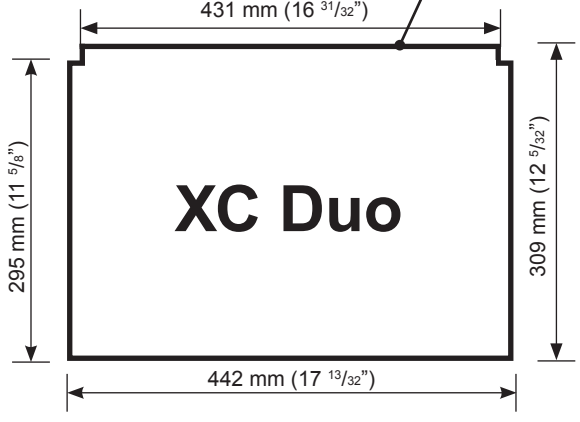

Measurements of the stove installation cut-out.

Fastening the device

Place the stove in the installation cut-out and attach the steel fasteners (1) with the screws M6x12 (2) to the rivet nuts at the ends. After this, install the cover plug (3) on the end of the screw and tighten the steel fasteners against the table with the screw M6x30 (4). Remember the locking nuts M6 (5).

The surface that the unit is to be fasted to must be perfectly flat.

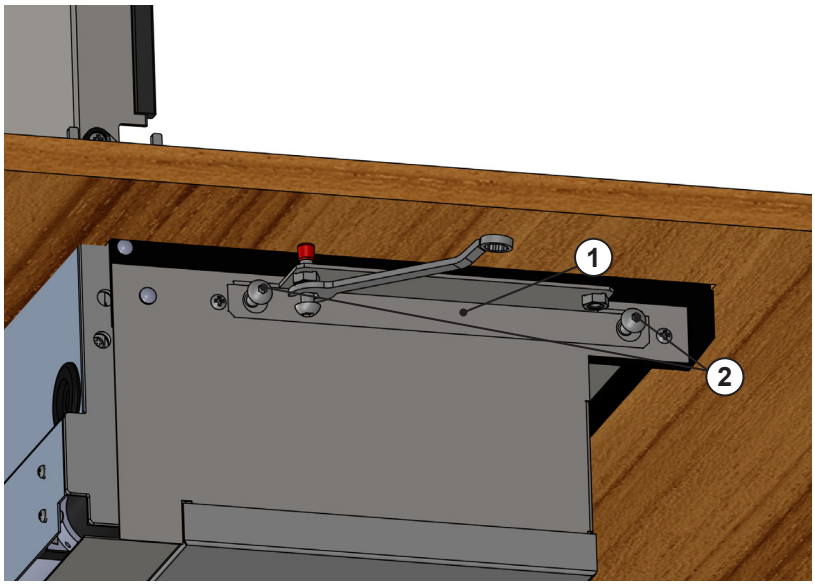

Attach the steel fasteners to the stove (1) with screws (2).

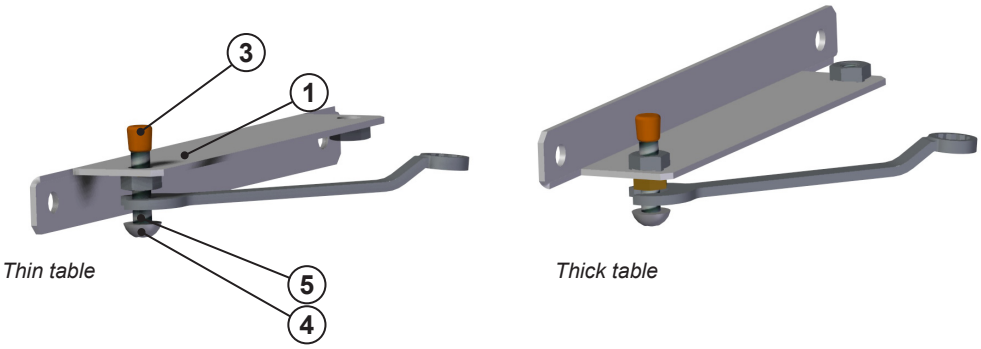

Thin table

Thick table

The steel fasteners can be installed in two ways depending on the thickness of the table board.
Push the cover plug (3) on the screw.
Tighten the screw (4) firmly against the table board and then tighten the locking nut (5).

Always use original Wallas accessories and parts with Wallas equipment.

Connections of the device

Things to note about the connections

In installation, to make the mounting and demounting for service easier, it is recommended to leave some extra length of loose cables and fuel line by creating a coil. If the installation location is cramped, it is recommend to connect the cabels and the fuel line to the device before mounting the unit to bracket. This will help the installation of device.

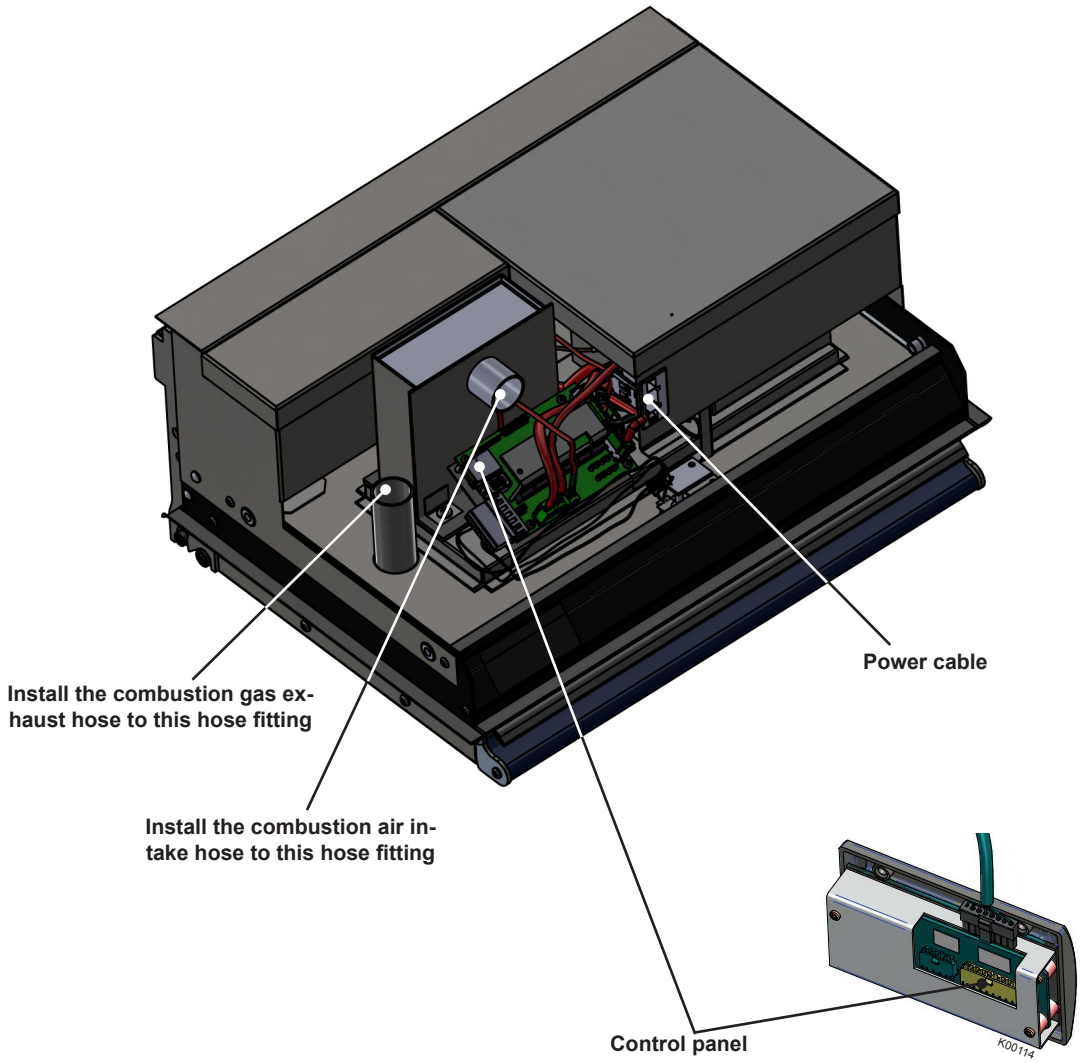

Control panel installation

Cut a suitable installation hole for the control panel in the selected location. Try to install the panel in a vertical surface in a location that will remain dry and in distance from splash water.

The thermostat sensor is in the panel face, so select the location with thermostatic operation/regulation in mind. Do not install close to heat source or close to a window or door. Avoid locations that might be contacted by direct sunlight. The length of the control panel cable is 3 m.

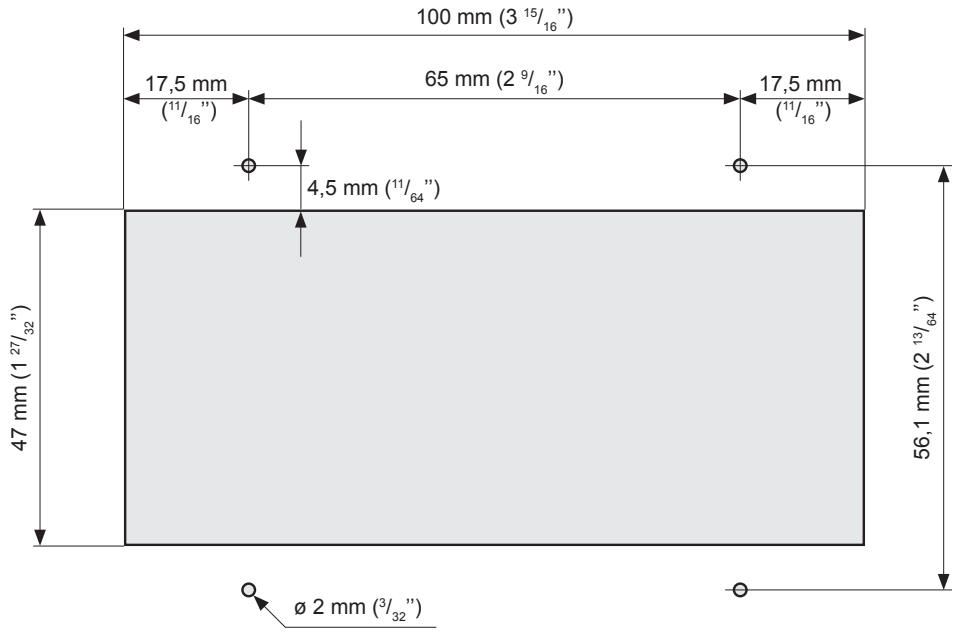

Measurements of the control panel installation cut-out.
If necessary, predrill holes for the ø 2 mm (3/32") screws.

You can utilize the sample of the box when drawing the lines of the installation hole.

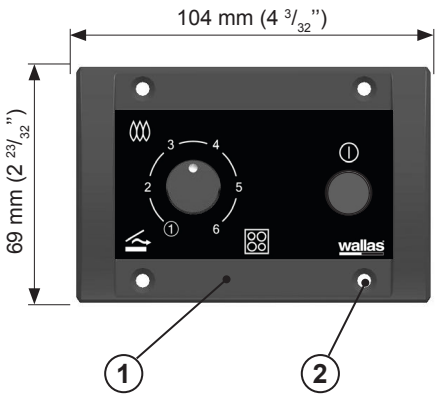

Connect the control panel cable from the device to the control panel (1).
Use the fastening screws to install the control panel to the installation cut-out (2).

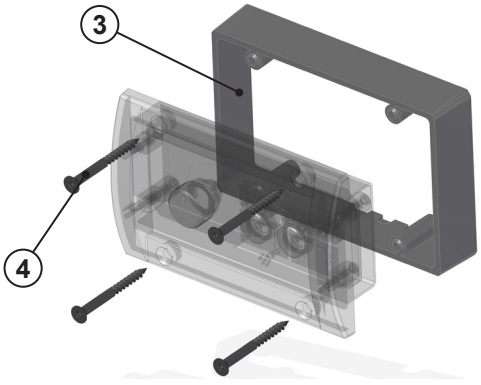

An extension collar (3) is used when control panel is surface mounted.
The box of the panel includes 4 pcs screws 3,5 x 40mm (black) TX10 (4).

Electrical connections

Things to note about the connections

The device uses 12 V (nominal) direct current voltage. To minimize current losses, make the power cable as short as possible and avoid joining. The cross-sectional area of the cable is dependent on the length of the power cord. The cross-sectional area of the cable must be consistent all the way from the stove to the battery. The maximum length of the power cord is 10 m, based on 6 AWG cable.

The cross-sectional area of the cable

Total length of the power cord (m)	Cross-sectional area of the cable in square mm (US Gauge)
0 - 4	4 (11 or 10 AWG)
4 - 6	6 (9 or 8 AWG)
6 - 10	10 (7 or 6 AWG)

If a thicker cable is required, make a separate joint in the power cord. See picture on the next page.

Main switch

A main switch must be installed on the device's "positive (Red)" cord. Always cut the power at the main switch (after cooling has completed), if the device is going to be left unused for a long period of time.
Recommended main switch should be 20 V DC / 20 A DC minimum.



Never use the main switch to cut the power before the cooling phase is completed.

Electrical connections of the device

12 V direct current system
Connect the red wire of the power cord to the plus terminal of the battery and the black or blue wire to the minus terminal. A 15 A main fuse must be installed near the battery on the red plus wire of the power cord. See picture.

24 V direct current system
If the device is to receive power from a 24 V system, always connect a charging voltage reducer and a 12 V battery before connecting the device. Without the battery the voltage reducer will not be enough on its own as it cannot generate the large amount of current the glow plug requires. After the 12 V battery, the connection is the same as in a 12 V system.

The unit should be connected to a battery used for purposes other than starting the engine, if possible.

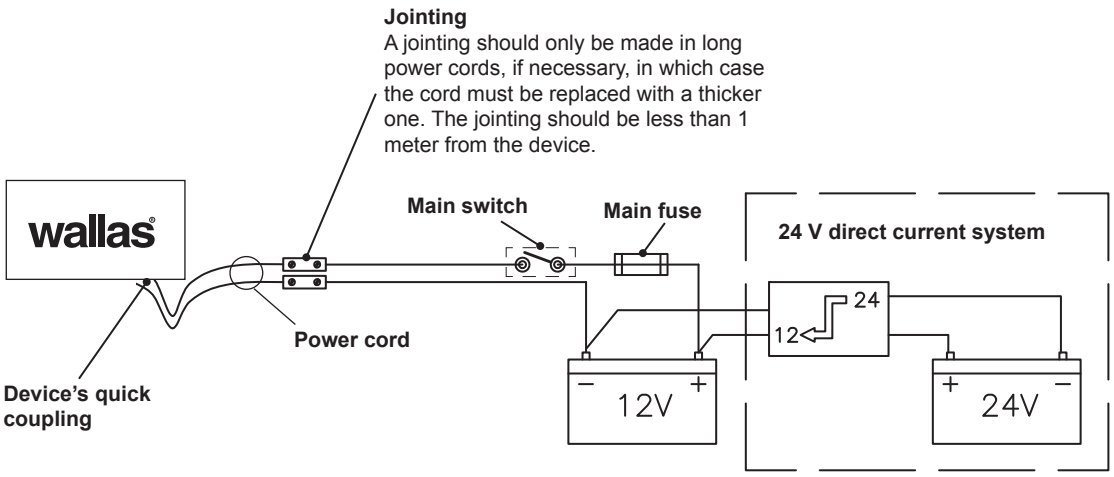

Checking the connection

The device consumes most power when it is started up (glowing). At this point voltage losses are also at their highest. During the glowing phase, the voltage must be at least 11,5 V measured at the quick coupling. See picture. If the voltage is lower than this, the device may not start.

Fuel connections

Things to note about the connections

The standard length of the fuel hose is 4 m (max 8 m). Cut the fuel hose to a length suitable for installation.
The lift height of the pump should be less than 2 m; preferably 0.5 – 1 m.
The fuel pipe must always have a Wallas filter. The fuel filter can be installed either near the device, near the tank, or in another location where it can be easily checked and replaced, when necessary.
Diesel engine fuel filters and/or separators are not approved for use. All soft connections should be made with rubber or silicone hose which is resistant to diesel.

Country-specific requirements

The standard fuel hose is plastic. Please observe country-specific requirements with regard to the material of the fuel hose/pipe and the fuel filter. The inner diameter of a new replacement hose should be equal to the inner diameter of the plastic hose. Copper pipe **300692** and metal filters **30016** are available as accessories.

Fuel feed

If the lift height exceeds 2 m, the fuel feed must be checked and, if necessary, adjusted. The fuel feed must also always be checked, if parts of the fuel system, such as the pump or the electronics card, have been replaced.
Fuel system adjustments are device specific. These adjustments should only be carried out by an authorized service shop.

Connection to a fixed tank

The device must have a dedicated connection with a fuel filter outside the tank. Please note that installation of such fuel intake pipe to the original tank of the vehicle may alter the original certification of the vehicle. Certified installation may require a separate approval of the fuel intake connection. If the vehicle has already a tube end where you can connect the fuel tube of **XC Duo**, you do not need any separate approval.

Connection to a separate tank

Cap run-throughs and sintered filters are used on plastic tanks.
The fuel tank should be mounted securely.

Wallas fuel tanks

Volume	length x height x width	Order code	
5 l	200 x 300 x 130 mm	**2024**	(accessory)
10 l	380 x 195 x 210 mm	**2027**	(accessory)
30 l	590 x 200 x 300 mm	**4030**	(accessory)
130 l	800 x 400 x 600 mm	**4130**	(accessory)



The fuel connections must be tightened firmly so that the air cannot leak into the hose. Always check the cleanliness of the connection surfaces before tightening. Air leaks in the fuel system will cause the device to malfunction.

Installation instructions for Tank connection 30018

Description
Einon® (**30018**) is a leak-proof intake fuel line.

Getting Started
Parts needed in installation are put in right order and are connected together with a wire. You shall never cut the installation wire , you'll need it when installing the intake pipe. (Installation without the wire is not possible).

Stages

- Make sure that the fuel tank is empty enough.
- Search about 4 cm flat section from the fuel tank where you can drill a 13 mm diameter hole.
- Clean the selected area of protection grease and clean also other possible dirt.
- Drill a hole.
- Remove the burr from hole (inside and outside).
- Figure out without installing for Einon® (**30018**) suitable bending and length.
- Cut the pipe end diagonally and remove burrs.
- Install the cut and bent intake pipe through the drilled hole into the tank.
- Push through the hole into the tank all the other interior parts (up to the mark), keep the order of parts as they are mounted to the wire.
- Pull from the wire until the Einon® (**30018**) threaded part is outside of the tank.
- Turn the Einon® (**30018**) to the correct position and tighten the tank external part (nut).
- Attach the fuel line to the Einon® (**30018**).

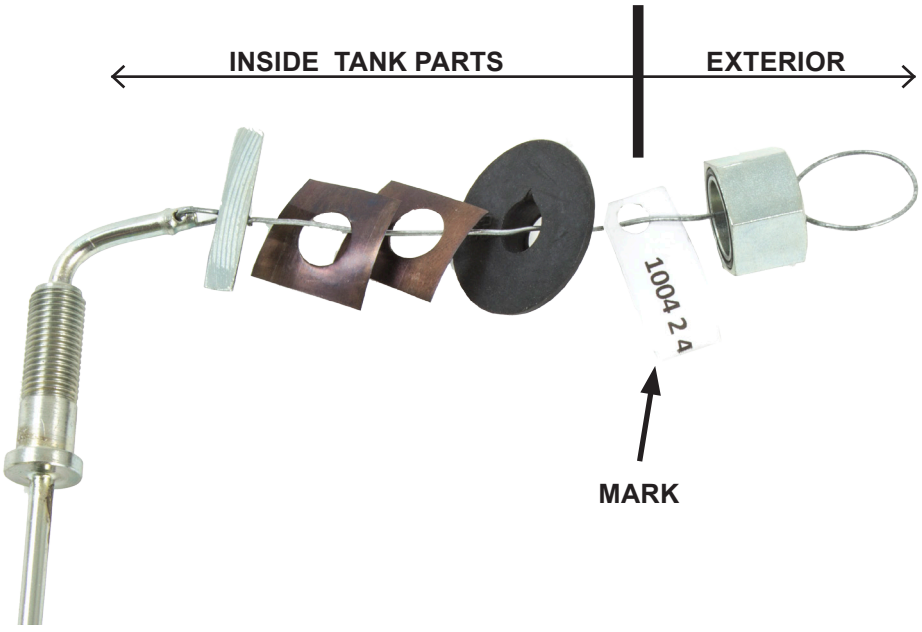

Installation instructions for Tank connection (XC Duo)

If the fuel will be taken from a separate tank, you must install a tank connection **367215** (4 m) / **367216** (6 m).

- Disconnect the fuel line which is leading from the fuel filter to device. Replace it with fuel line of tank connection fuel set.
- Install the tank connection in the Wallas tank.

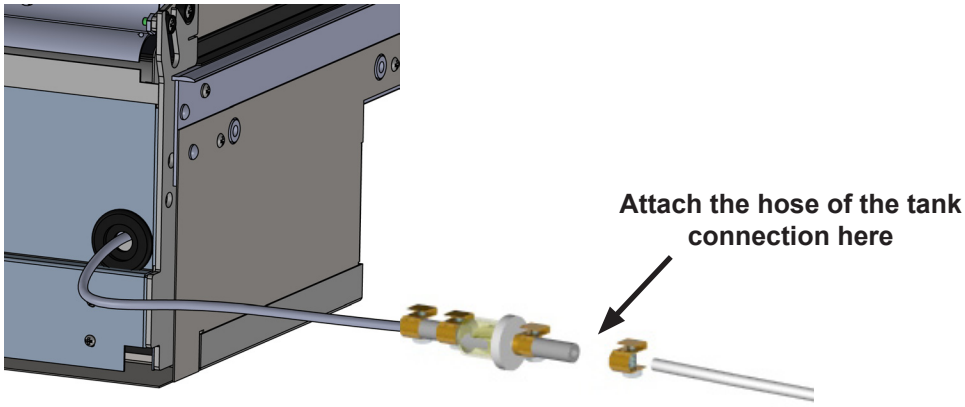

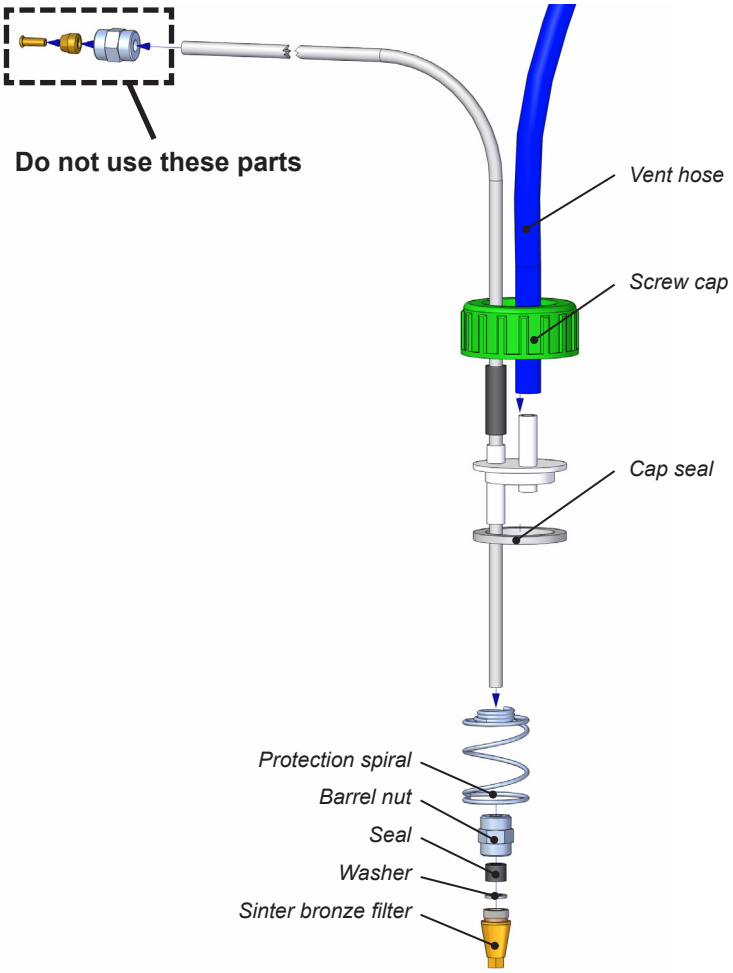

Tank-external filters

Near the device (0.5 m) is a factory-mounted fuel filter, **30015**.
Check regularly the filter and replace it if necessary.
Filters can be installed in a ø 5 or ø 6 mm plastic. Ensure that the fuel pipes are clean before installing the filter. There must be no debris or impurities between the pump and the filter as they will clog the pump. The filter type must be selected according to the operating conditions and country-specific requirements.

Fuel filter 30014

(accessory)
This filter is intended for cold conditions.
The filter can be installed between two ø 5 mm fuel hoses with ø 5 mm barrel nut, ø 5 mm olive and ø 2 mm support sleeve.

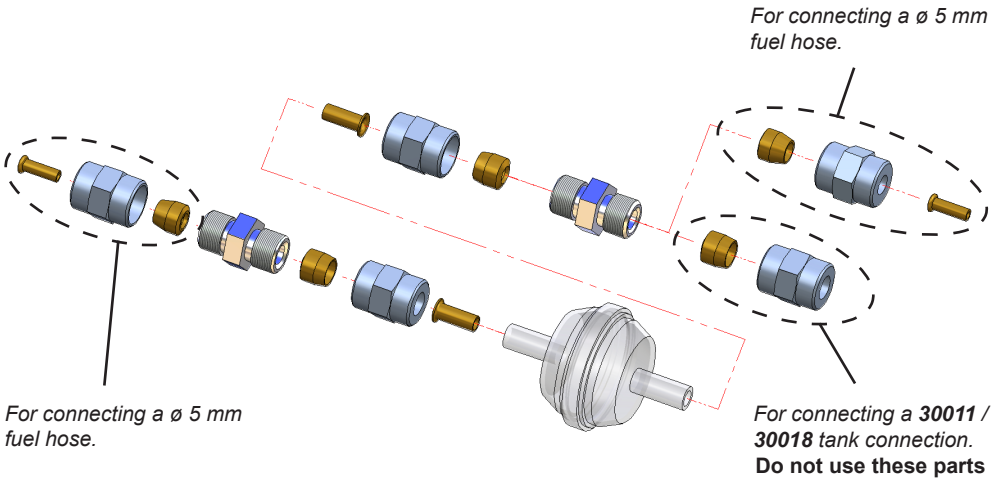

Selecting the fuel

When selecting the fuel type, take note of the temperature limits of each particular fuel. The limit values provided here are to be treated as guidelines. Confirm the actual temperature limits from the fuel supplier.

- diesel, summer grade, temperature must not fall below –5 °C.
- diesel, winter grade, temperature must not fall below –24 °C.
- diesel, arctic winter grade, temperature must not fall below –40 °C.

If the temperature drops lower than the minimum level, paraffin may form in the fuel. This may result in the fuel filter and pump being clogged. The clog will dissolve only if the fuel temperature rises clearly over 0 °C.
The less aromatic substances the fuel contains, the less deposits will be formed. Normal furnace oils contain 35–40 % of aromatic substances. In city diesels and green furnace oils (green diesel heating oil) the concentration is 20 %.



Diesel qualities and definitions vary by country. Always check the right fuel from your importer / dealer



Confirm the actual temperature limits for the fuel you are using from the fuel supplier.

Combustion gas connections

Location of the exhaust head

Location in the underframe
When selecting the location for installing the **4300** exhaust head, the internal layout of the vehicle and routing of the combustion gas and intake air hoses should be taken into account. Try to keep the hoses as short as possible. Also keep in mind that the combustion gas hose becomes hot.

A free flow of air past the exhaust head must be ensured at all times. Install the exhaust head on a straight surface, flush with the vehicle's side line. Avoid corners and cavities where wind pressure may disturb the unit's operation. Also bear in mind that when installed in the middle of the vehicle, the exhaust head will reduce ground clearance the most.
The minimum distance of the exhaust head from the fuel tank's filler hole is 400 mm (16").
The front edge of the exhaust head must always be installed flush with the vehicle's side line, in a slight downward inclination (at least 5°); the head must not be under the vehicle. The minimum distance from the rear tyre of the vehicle is 0.3 metres, while the minimum distance from the front tyre is one metre. The exhaust head must not be installed at the rear end of the vehicle.

= *A good place for the exhaust head*

= *A possible place for the exhaust head*

= *The exhaust head must not be installed here*

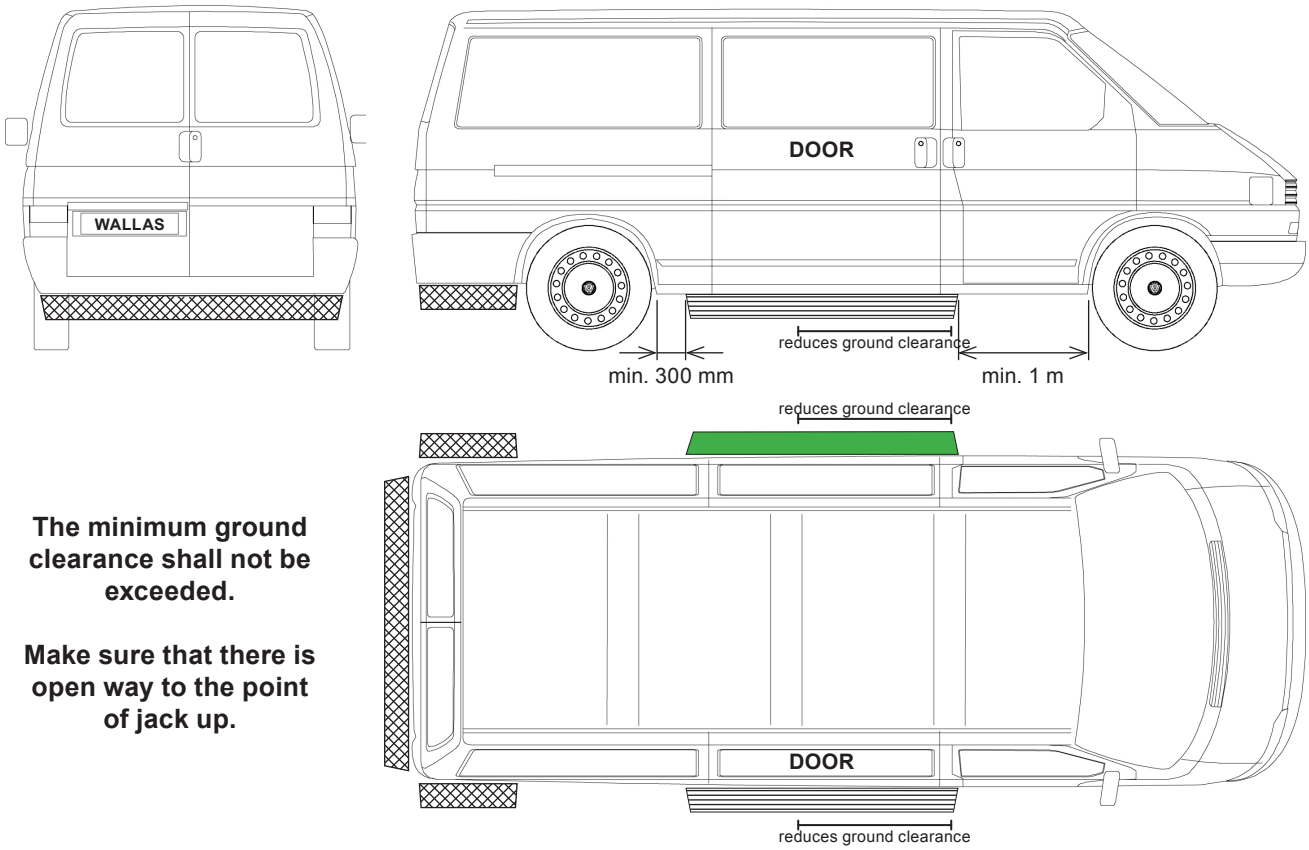

The minimum ground clearance shall not be exceeded.

Make sure that there is open way to the point of jack up.

Location under a window

The exhaust head **4300** shall not be installed under an **opening** window or closer than 300 mm to the window's edges. If the exhaust head has to be installed near an opening window, the window must be prevented from opening or fitted with a switch that prevents the hob from being used when the window is open.

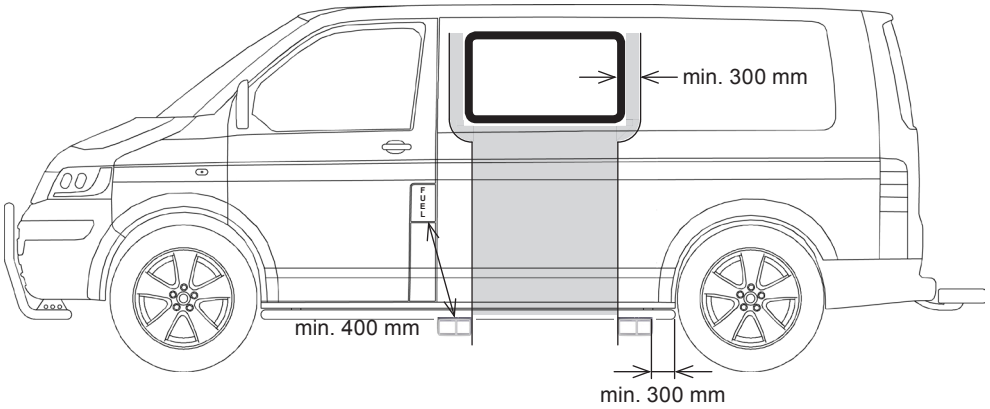

Installing the hoses

Installation

When you have chosen the location for the **4300** exhaust head, you should find the best place to lead the combustion gas and intake air hoses through the bottom of the vehicle.

Drill two holes of approximately Ø 43 mm for the hoses, as illustrated. The holes must be 62 mm apart. Install the **4320** bottom penetration cover plate set. Insulate the combustion gas pipe with the **1030** fibreglass sleeve. If the floor structure of the vehicle at the location of the combustion gas hose is not heat resistant, remove part of the insulation and replace it with heat-resistant material.

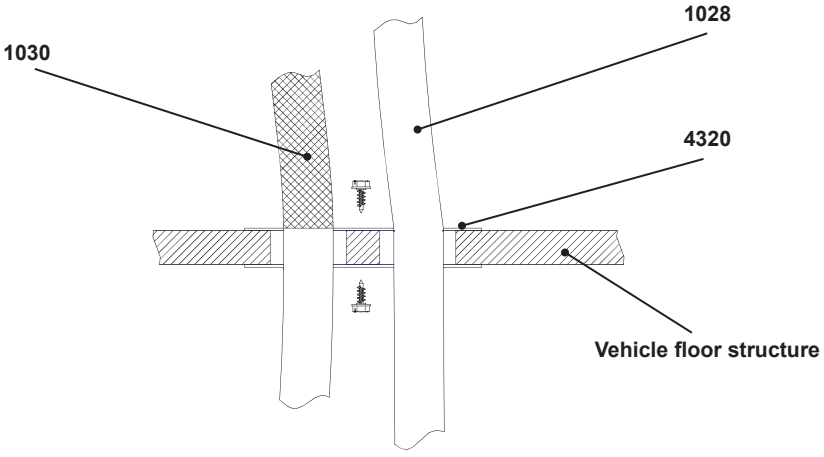

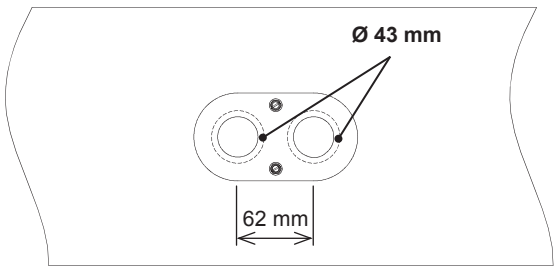

Removing the plastic frame of the exhaust head

The **368202** plastic frame of the **4300** exhaust head is removed by carefully by pulling the plastic strips on both sides of the plastic frame outward while pulling the plastic frame out of the exhaust head.

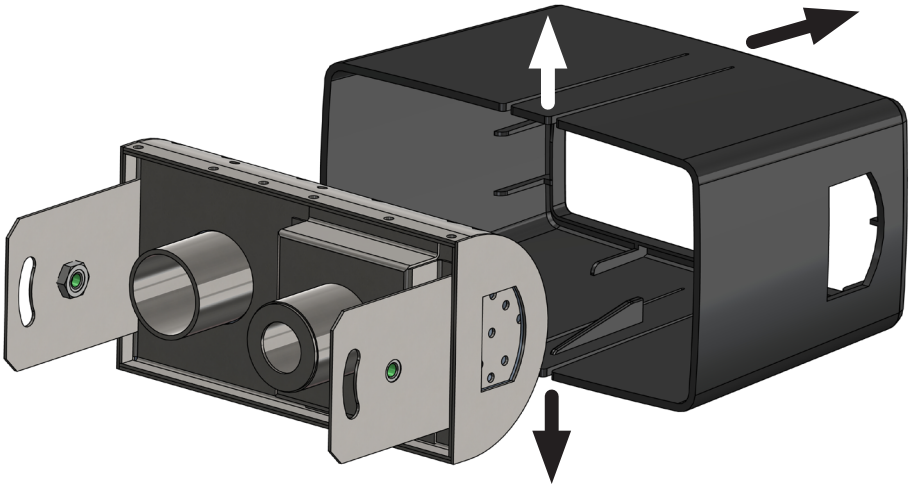

Fixing the hoses on the exhaust head

Fix the combustion gas and intake air hoses firmly on the exhaust head using the hose clamps supplied with the accessory pack. Note the connection points of the hoses on the exhaust head; the intake air hose is installed on the reduced hose fitting on the **4300** exhaust head, while the combustion gas hose is fitted on Ø 28 mm hose fitting.

The combustion gas hoses must be made of stainless steel.

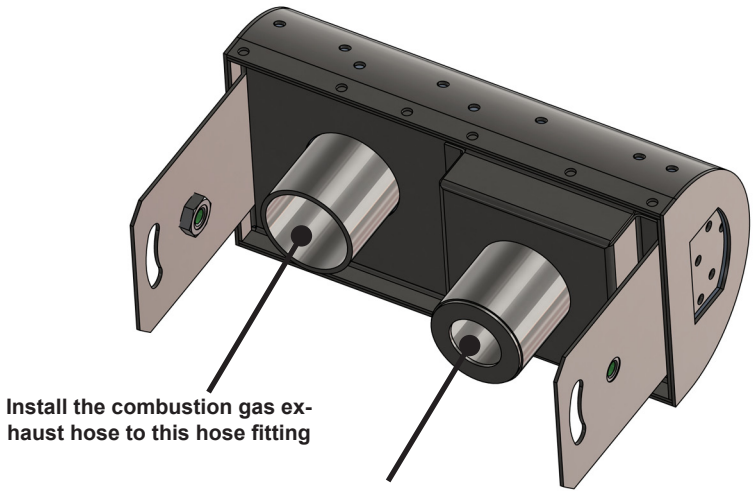

Note the connection points of the hoses on the exhaust head; the intake air hose is installed on the reduced hose fitting on the 4300 exhaust head, while the combustion gas hose is fitted on Ø 28 mm hose fitting.

Installing the exhaust head

Orientation of the exhaust head
The **4300** exhaust head must be installed so that the combustion gases are expelled to the side of one of the vehicle's rear tyres. The combustion gas is exhausted through the smaller opening in the plastic frame of the exhaust head, and seen from the rear of the head, the combustion gas exhaust hose is fixed on the unreduced (Ø 28 mm) hose fitting.

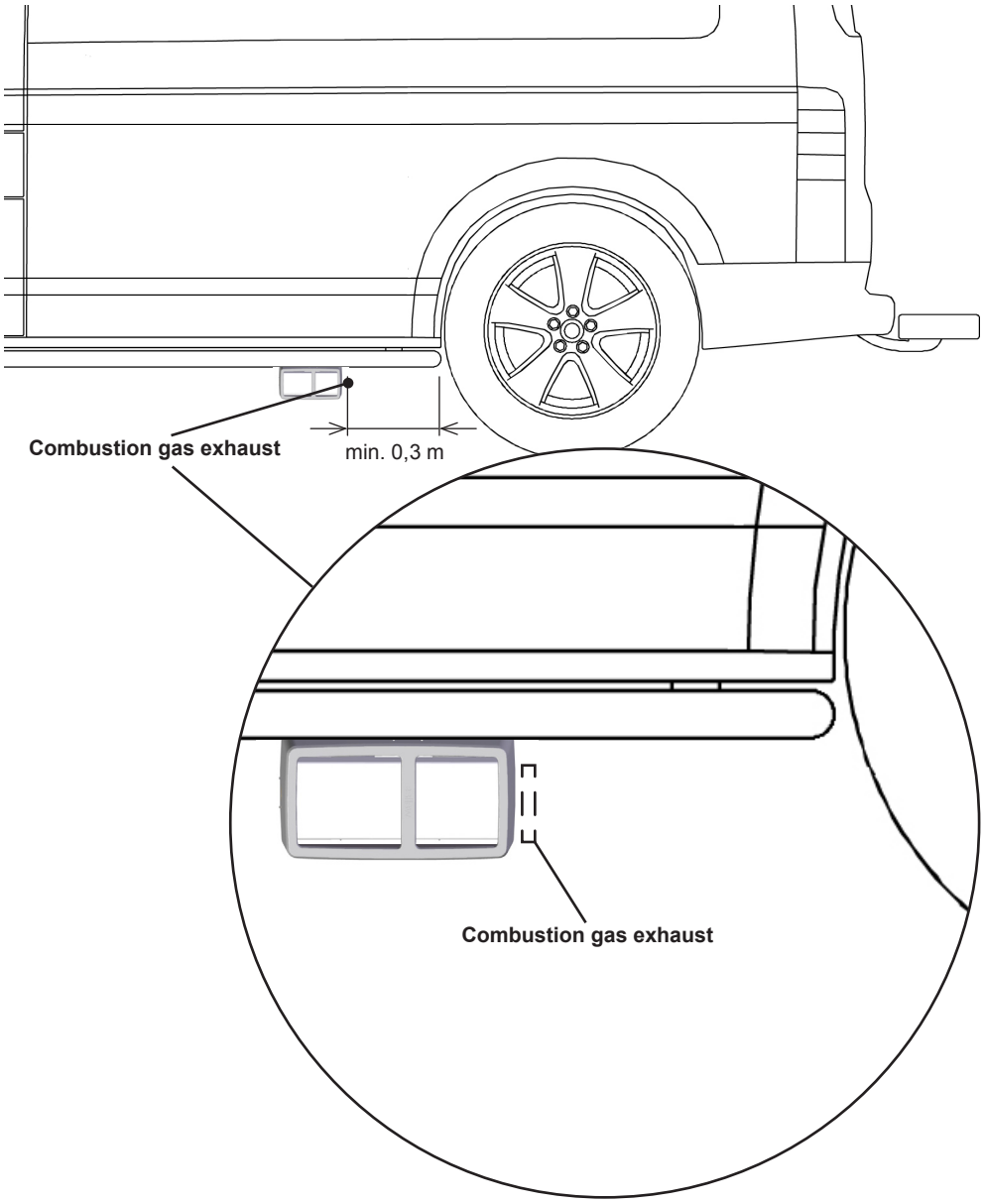

The exhaust gases are removed from the smaller end of the grille in the exhaust head 4300. The smaller end of the grille is located closest to the rear wheel.

Fixing to the vehicle bottom

There are many possible ways to install the **4300** exhaust head to the vehicle's bottom structure. The **4310** basic chassis installation kit can be used to install the combustion gas frame to most vehicles. The **4330** extension kit is available for special cases.

TYPICAL INSTALLATION:

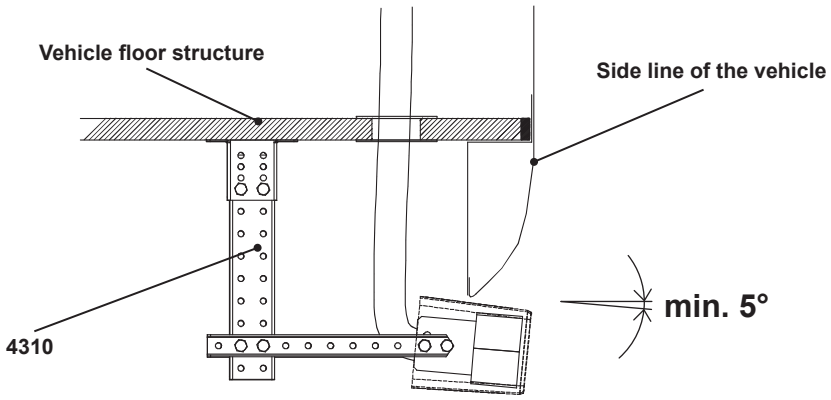

SPECIAL SITUATION 1:

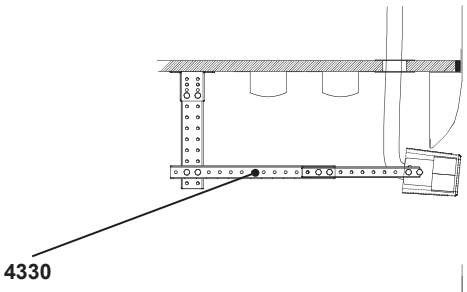

SPECIAL SITUATION 2:

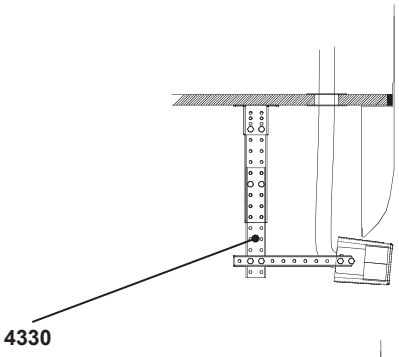

SPECIAL SITUATION 3:

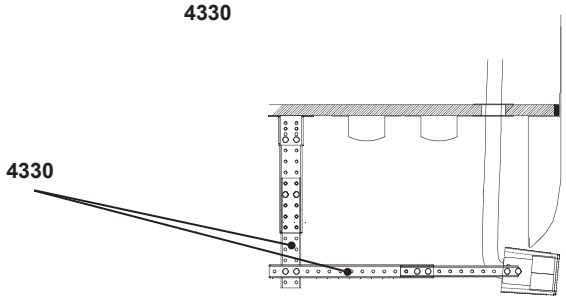



The 4300 exhaust head must be installed at a minimum downward inclination of five degrees (5°), flush with the side line of the vehicle.

Installing the plastic frame on the exhaust head

After the metal part of the **4300** exhaust head has been firmly fixed to the hoses and the chassis, install the plastic frame on the exhaust head. The frame is installed with the smaller opening on the combustion gas exhaust side. Make sure that the claws of the plastic strips lock the frame in place.



Exhaust head 4300 is a mandatory accessory. Without this part, the combustion will be disturbed.

Installation and initial start-up

Installation

- ☐ Ensure sufficient air ventilation for heater, minimum aperture of 100 cm^2 (16 sq. in.) into installation area.
- ☐ Ensure that the vehicle is sufficiently ventilated.
- ☐ We recommend installing the control panel on a vertical surface where liquids are not able to leak into the panel and it is out of reach of children (cable length 3 m).
- ☐ The control panel is installed in a location where its thermostat can best regulate the temperature.

Fuel system

- ☐ Fuel for the device comes through a separate tank fitting, not via a manifold or connection shared by the engine or other device.
- ☐ **Fasten the fuel hose couplings tightly.**
- ☐ The hoses must be kept clean during installation.
- ☐ Use only Wallas fuel hoses.
- ☐ Cut the fuel hoses to the appropriate length when installing them.

Electrical installation

- ☐ The nominal voltage of the device is 12 VDC.
- ☐ Current for the device is taken directly from the battery terminals using cables that are as short as possible.

Exhaust fumes

- ☐ When choosing the outlet location, note that exhaust fumes are hot.
- ☐ The exhaust pipe must not come into contact with combustible materials. Insulate the exhaust hose.
- ☐ The exhaust head outlet must be at least 400 mm (16”) away from the opening for filling fuel or tank breather.
- ☐ The exhaust side of the combustion gas head is to the side of one of the vehicle’s rear tyres.
- ☐ Make sure that the exhaust gases come out from the smaller grill of the combustion gas head.
- ☐ The combustion gas head is not under or near an opening window (300 mm).

Initial start-up

The device usually does not start the first time after it has been installed. It may take several starts for the fuel hoses to fill up enough for the fuel to reach the burner.
Watch the hoses as they fill up as you start the device.
After two unsuccessful start-ups, the device will lock. (The yellow and red LED lamps will blink simultaneously indicating a lock-up.)
Follow the instruction for unlocking the device and try again.
Watch the hoses fill up with fuel while you start the device.
When the device starts, look for possible leaks in the exhaust and fuel connections.
Run the device for c. 1-2 hour to allow possible installation and manufacturing greases to burn off.
Make sure there is enough ventilation.

Remember to carefully read the instructions for installing, operating and servicing each device before installation.

To be filled in by the installer

☐ **Test-run performed**

Serial number	
Company	
Installer	
Installation date	
Signed	

Installer must check (x) the sections, then sign her/his signature.

Run the device for c. 1-2 hour to allow possible installation and manufacturing greases to burn off. Make sure there is enough ventilation.

Device use

Ignition

The stove turns on and heats automatically.
The stove turns on when the power switch (3) is continuously pressed for at least 2 seconds, and the power indicator light (4) turns on, notifying that the stove is ready for use. The stove switches to its normal mode when the switch is released after 2 seconds of pressing and the yellow heating indicator light (7) turns on.

A red combustion indicator light (1) will be lit when the burner flame has been ignited and the combustion has stabilised after about five minutes after the ignition. The whole process takes about 11 minutes.



Please note that there may come very small start odor during the ignition.

If you note any odor during the operation (after 5 min. from the start), the unit or installation is not in order. In such case please contact your supplier.

INDICATIVE TEMPERATURE SETTINGS FOR THE THERMOSTAT IN HEATING MODE

1. ~ 5 °C (~ 41 °F)
2. ~ 11 °C (~ 52 °F)
3. ~ 17 °C (~ 63 °F)
4. ~ 23 °C (~ 73 °F)
5. ~ 29 °C (~ 84 °F)
6. ~ 35 °C (~ 95 °F)

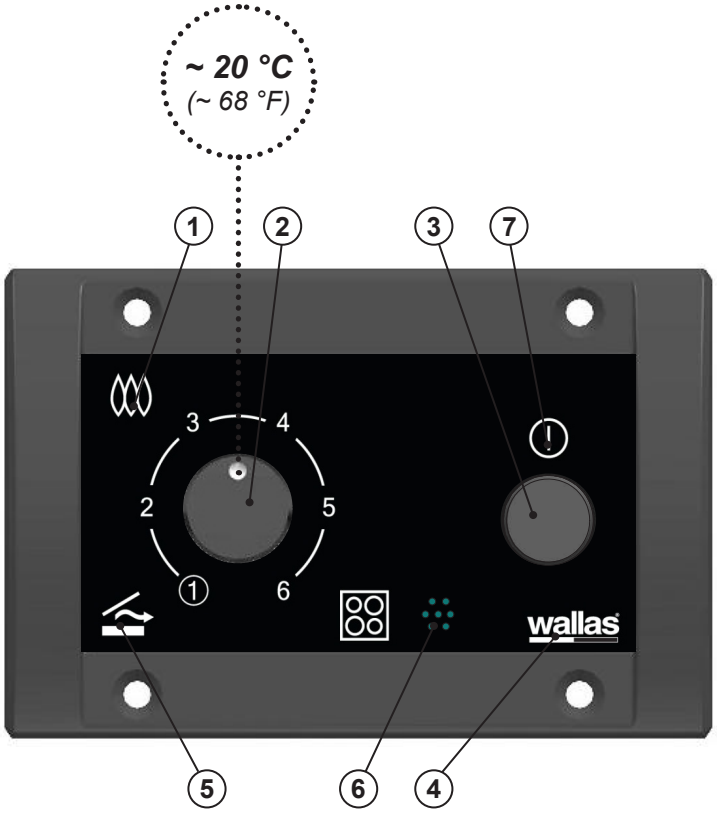

1. *Combustion indicator*
2. *Temperature adjustment / Power control*
3. *Heating switch*
4. *Power indicator*
5. *Thermostat indicator*
6. *Thermostat sensor*
7. *Heating indicator*

First start-up

After installation or maintenance, if the fuel line is empty, the heater may not start at the the first attempt. Start-up phase with empty fuel line is longer than normally and might take about 15 minutes. If the heater doens't ignite the red combustion indicator light will start to blink after start-up.

Turn off the heater. The device cannot be restarted until the cooling phase is completed.

When the cooling phase is finished, switch the heater on again.

If the device does not start after two attempts, it cannot be started again: the heater will lock itself (lights blink to indicate this). Find out the reason why the unit didn't start.
If the heater iginites during two attemps the red combustion indicator (1) will go on.

After locating the fault, release the locking (instructions in the maintenance section) and start-up the unit.

Depending on the length of the fuel hose, the heater may have to be started up several times during priming. Keep an eye on how the fuel travels in the fuel hose while starting up the heater.

Run the device for c. 1-2 hour to allow possible installation and manufacturing greases to burn off. Make sure there is enough ventilation.

Normal Use

The power is adjusted manually. The cooker will always ignite in manual mode.

After the ignition power can be adjusted step-less with the power control (2) knob. Avoid turning the power control knob rapidly back and forth, this may cause the burner to become sooty.
When using as a stove, make sure that the thermostat indicator light (5) is not on.

Cooker used as a heater, thermostat use

Requires a heat blower lid.



Automatic power adjustment, thermostat controlled adjustment.
Is used only with a heat blower lid when the lid is folded over the ceramic top.
The function can be activated/deactivated whenever wanted. Turn the power control knob (2) to positions min-max-min-max when yellow heating indicator (7) is on, to activate the function. As a confirmation of the mode change, the thermostat light (5) will be lit.
When turning again the power control knob (2) min-max-min-max, the thermostat light (5) will go off and the unit returns to manual mode.

After the cooker has passed the ignition phase, the temperature is adjusted by turning the power control knob (2). The power control knob is turned to the required position.
When the thermostat light (5) is bright, the temperature is below the required temperature – the effect is increased. When the thermostat light (5) dims the required temperature is achieved.

Sun-switch (heating)

The sun-switch shuts down the device automatically, if the temperature rises above the requested temperature, for example, due to sunlight. The temperature must rise by +7 °C above the set value for a half an hour. If the device has been shut down by the sun-switch, an indicator light (5) blinks on the thermostat. The sun-switch can be turned off temporarily, by turning the temperature control (2).
A heater that has been shut down can be restarted manually, if necessary.



Temperature of cabin can be determined by turning the knob (2) until the brightness of the thermostat light (5) changes. The position of knob (2) when the light changes will indicate cabin temperature.

Manual power adjustment (stove/heating)

The power can be adjusted manually.
To enable this function, turn the power adjuster (2) to positions min - max - min – max.
The device signals that manual function has been activated when the thermostat light (5) shuts off.
After the heater has been started up, the power can be adjusted smoothly with the power adjustment knob (2).

From manual mode to thermostat mode you can go by turning the knob (2) min - max - min – max again. As a confirmation of mode change the thermostat light (5) will go on

Shutdown

You can shut down the heater by pressing the heating switch (3) continuously for at least 2 seconds. The yellow heating indicator light (7) will go out immediately. The red combustion indicator light (1) will continue to blink for about five minutes, while the device is cooling down. You cannot restart the device until the combustion light has stopped blinking.



Only use the heater when the vehicle is at a standstill and never when it is unattended.



The total time of the starting procedure is app. 11 minutes, when after the device can be adjusted or will set itself to the selected effect.



When adjusting the effect from the regulation knob, the effect adjusts smoothly.

High altitude switch

Switch for high altitudes. Switched on when the device is used more than 1300 meters (4200 feet) above sea level. This function increases the amount of combustion air in thin air.
The high altitude mode is turned on by pressing the heating switch (3) for 10 seconds , when you start the unit. Pressing the heating switch for 2 seconds while the stove is running will shut the stove off. As a sign of the switch being on, the yellow heating indicator light (7) will flash three times. Once started in high altitude mode, the device will operate well up to an altitude of 3100 meters (10 000 feet).

Colour	Blink interval	Function
Yellow	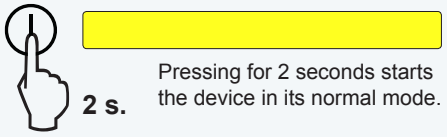 2 s. Pressing for 2 seconds starts the device in its normal mode.	Heating on
Yellow	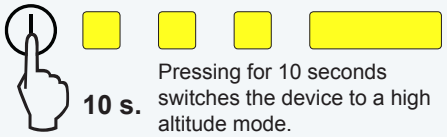 10 s. Pressing for 10 seconds switches the device to a high altitude mode.	Heating on

Signal lights

Colour	Blink interval	Function
Yellow		Heating on
Red		Combustion indicator when the combustion has begun normally
Red		Aftercooling
Orange		Thermostat control, the set temperature exceeds the set value > power is increasing
Orange		Thermostat control, the set temperature is lower than the set value > power is decreasing
Orange	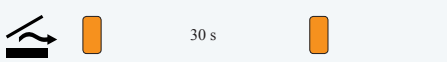	Sun switch has shut down the device

Things to note about the use of the cooking plate

Only use dishes with a smooth bottom so as to not damage the stove top. If you use the cold stove top for other work or chores, be sure to wipe it clean thoroughly after you are done. Even a small crumb, if hard enough, can scratch the surface when a kettle is placed on the stove top. These small scratches, which are to some extent inevitable, will in no way affect the heating power of the stove.
The bottom of the cooking vessel should be slightly concave when cold so that when it expands due to the heat, it will sit evenly on the stove top and the heat energy will be distributed optimally.
The ideal bottom thickness for steel enamel vessels is 2 – 3 mm and for steel kettles with a sandwich bottom 4 – 6 mm.

Cleaning and maintaining the stove top

In order to keep the stove top in good condition both aesthetically and performance-wise, it should be cleaned regularly; preferably after each time of use. First scrape of the clearly noticeable dirt and food scraps with a cleaning spatula. Put a few drops of a cleaning agent for ceramic surfaces on the stove top and wipe it with a piece of paper towel. Then wipe the stove top with a moist cloth and dry it with another cloth. Do not use abrasive cleaning sponges or agents. Additionally, avoid using chemically strong cleaning agents, such as an oven cleaning spray or stain remover.
Immediately clean off aluminium foil, plastic, sugar or other sugary substances that have melted on the stove top. This prevents the surface from getting damaged. Before cooking particularly sugary foods, the surface should be treated with a protective agent. This prevents possible damage due to the food boiling over.
Observe the general maintenance recommendations for Wallas equipment when servicing the electronic and mechanical parts of the stove.



- **If you get a crack to the ceramic stove top, the top shall be replaced immediately.**
  You can use the cooker again, when the ceramic top has been replaced.
- **Don’t use stove / heater when refueling the vehicle.**
- **Never keep the stove on without a kettle or closed blower lid.**
- **When leaving the vehicle always check that the stove has not been left on.**

Fault signals and releasing the lock

Colour	Blink interval	Fault description
Yellow		Glow failure
Yellow		Combustion air blower fault
Yellow		Main blower fault
Yellow		Undervoltage
Yellow Red		Locking; the device locks itself after 2 unsuccessful starts *)
Red		Indicating flameout
Yellow Red		Overheat
Red	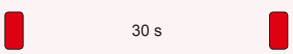	5 minutes after fault indication

If the heater has locked itself, you must determine the cause for the locking before releasing it.

***) RELEASING THE LOCK:**

1. **When the lights are blinking, switch off the main power at the battery, breaker or in-line switch.**
2. **Switch the main power back on.**
3. **Press the power switch (3) for at least 2 seconds.**
   Power indicator light (4) will shut down.
4. **Restart the heater normally.**

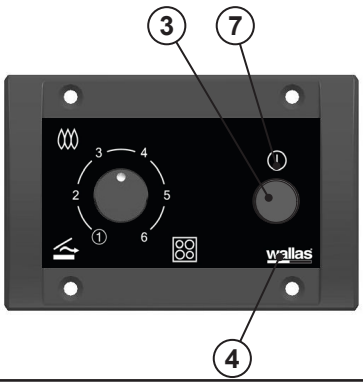

Maintenance recommendations

Cleaning the exhaust head

Clean the vehicle's **4300** external exhaust head regularly. Over time, mud and dust from the road will block the small holes in the exhaust head. Any blocked holes may change the burner's combustion parameters or even prevent the unit from operating altogether.

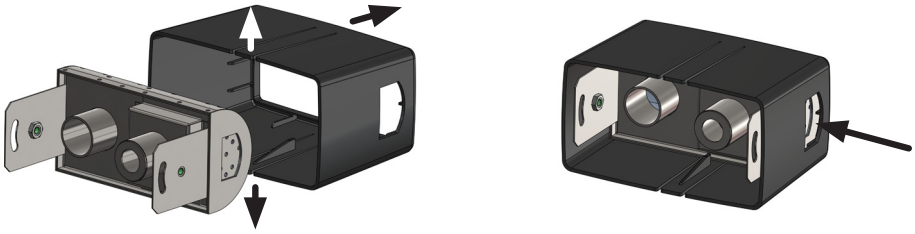

Basic maintenance

Check the fuel filter and fuel system connections at regular intervals.
You should also check the power supply fuses and connections for any oxidation.
No hour limit has been set for basic maintenance.

The unit should be serviced, if:

- it is difficult to start
- it generates smoke (other than at startup)
- it otherwise behaves abnormally

Special recommendations

Occasional (monthly) use of the device will increase reliability by purging old fuel.

If the device uses the same tank as the engine:
Observe the engine manufacturer's recommendation with regard to the fuel type and moisture removal.

If the device has a separate tank:
When selecting the fuel type, take note of the temperature limits of each particular fuel.

Removal of the water from the tank

Isopropanol based anti ice detergent meant for gasoline cars (no ethylene or methyl based) may be added to the fuel during the season. It is useful to make the addition after each couple of tanks and in the beginning and end of the heating season. The anti ice detergent binds the condensed water and prevents the sediment and contamination during the summer. For the dosage, observe the recommendations given by the manufacturer of the agent.



An anti-freezing agent for diesel vehicles may increase the forming of scale at the bottom of the burner and therefore shorten the maintenance interval.

Winter storage

If the device uses the same tank as the engine:

- Change the fuel filter.
- Perform measures recommended by the vehicle/engine manufacturer to be performed before winter storage.

If the device has a separate tank:

- Drain the fuel tank in the autumn.
- Clean the tank and change the fuel filter.
- Fill the fuel tank with fresh and clean fuel in the spring.

For the device itself, you do not need to do anything.

Spare parts

Spare parts list, www.wallas.com



When using the XC Duo in winter time, please check regularly that the exhaust head and especially the air intake part of it is out of ice and snow. Remove ice and snow if needed.

Troubleshooting, locking indication

