INSTALLER: Leave this manual with the appliance. **CONSUMER:** Retain this manual for future reference.

DICKINSON 12v FAN REPLACEMENT

INSTALLATION INSTRUCTIONS

These instructions apply to Dickinson part numbers:

01-999P
01-999H
01-999-NEWALA
01-999-SIG
01-997H
01-997-NEWALA

Dickinson Marine #101 - 17728 66 Ave, Surrey, BC, Canada, V3S 7X1
Toll Free: 1-800-659-9768
Email: info@dickinsonmarine.com

TABLE OF CONTENTS

Page 1 **I. APPLIANCE FAN UPGRADE**
2 **II. REPLACEMENT FAN TYPES**
III. REPLACEMENT FAN WIRING
3 **IV. REPLACEMENT FAN INSTALLATION**
4 **V. TROUBLESHOOTING**

As of 2024 all Dickinson appliances will be equipped with upgraded fans and speed controls. If you are purchasing a replacement fan or speed control for an appliance made before 2024, both components (fan + speed control) will need to be replaced

www **dickinsonmarine.com**
info@dickinsonmarine.com
@dickinsonmarine
@dickinsonmarine1932
/dickinsonmarine

All rights reserved. No part of this manual may be reproduced without permission in writing from Dickinson Marine. Dickinson also reserves the right to modify or change without notice, any materials, applications, equipment, accessories, and/or prices. All dimensions, measurements and weights are approximate.

I. APPLIANCE FAN UPGRADE

Caution! Failure to adhere to the safety warnings listed in this manual could result in damage to property or severe personal injury!

- **ALWAYS** DISCONNECT ALL POWER FROM APPLIANCE BEFORE SERVICING
- **ALWAYS** USE ORIGINAL UNUSED DICKINSON REPLACEMENT PARTS ON YOUR DICKINSON APPLIANCE
- **ALWAYS** FOLLOW THE OEM INSTALLATION AND OPERATION PROCEDURES FOR THE APPLIANCE.
- **NEVER** USE FORCE OR TOOLS TO OPERATE THE APPLIANCE
- **NEVER** MODIFY OR ALTER YOUR APPLIANCE, IT'S COMPONENTS OR CONTROLS
- **NEVER** OPERATE THE APPLIANCE WITH ANY OF ITS PANELS OR SAFEGUARDS REMOVED

APPLIANCE FAN CHANGES

Dickinson appliances now come equipped with upgraded, longer-lasting draft & blower fans.

Appliances manufactured in 2024 and later will now be equipped with an upgraded fan. The upgraded fans will also fit older appliances including all Dickinson Marine diesel stoves, heaters and propane fireplaces.
Appliances equipped or upgraded with a new fan must also have an updated speed control – an older speed control will not perform adequately in conjunction with a new fan, both must be replaced.

Table 1

Fan part number	For models	Voltage	Current A	Speed RPM	Speed control
01-999P	All propane fireplaces	12	0.40	4800	#01-998
01-999H	Diesel Stoves (all) Lofoten & Antarctic	12	0.40	4800	#01-998
01-999-NEWALA	Alaska & Newport	12	0.40	4800	#01-998
01-999-SIG	Sig marine diesel heaters	12	0.40	4800	#01-998
01-997H	Diesel Stoves (all) Lofoten & Antarctic	24	0.20	4800	#01-996
01-997-NEWALA	Alaska & Newport	24	0.20	4800	#01-996

32v Fan & Fan Speed Control is no longer available

II. REPLACEMENT FAN TYPES

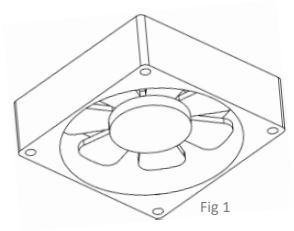
Fig 1

01-999P

The fan is manufactured from plastic rated to UL 94V-0, which is the highest level of flame retardancy. High heat resistance and an extended life expectancy will help this fan last many times longer than previously.

The replacement fans for propane fireplaces don't require a protective housing but can be installed directly into the appliance. It can be attached using the same mounting holes as the previous fan.

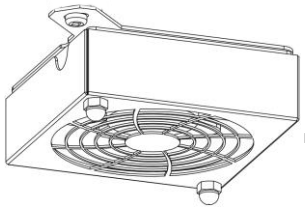
Fig 2

01-999H (12v) & 01-997H (24v)

For all stove models and the Lofoten & Antarctic heaters models – the replacement fan comes mounted inside a protective stainless steel housing.

It can be attached using the same mounting holes as the previous fan on all models but the Bering stove - the Bering stove will require new holes be drilled to fit the fan.

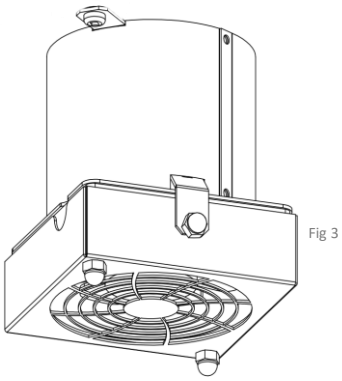
Fig 3

01-999-NEWALA (12v) & 01-997-NEWALA (24v)

For the Newport and Alaska models only – this replacement fan comes inside a stainless steel housing featuring an attached cowling.
It can be attached using the same mounting holes as the previous fan.

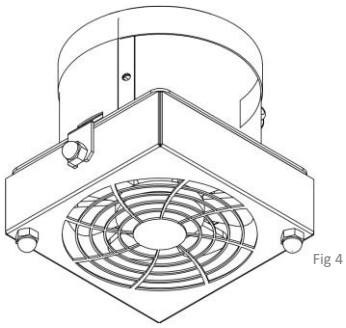
Fig 4

01-999-SIG

For Sig Marine heaters only – this replacement fan comes inside a stainless steel housing featuring an attached cowling and clamp to attach to Sig heater ducting.

III. REPLACEMENT FAN WIRING

Where applicable, this appliance must be electrically grounded in accordance with local codes or in absence of local codes, with the *National Electrical Code, ANSI/NFPA 70*, or *the Canadian Electrical Code, CSA C22.21*.

The fan can be supplied using AC power with a transformer plug (AC connection) from a 12v battery or other 12v power supply.

If using a 19-211 AC power adapter, the black and white wire is the positive lead, and must be connected to the red wire connected to the fan ON/OFF switch.

Every appliance fan is wired through an ON/OFF switch and variable resistor fan speed control. See below (Fig 7) for a diagram of how these are wired in sequence.

A 4 amp fuse is recommended if supplying power to the fan from a battery.

AC CONNECTION

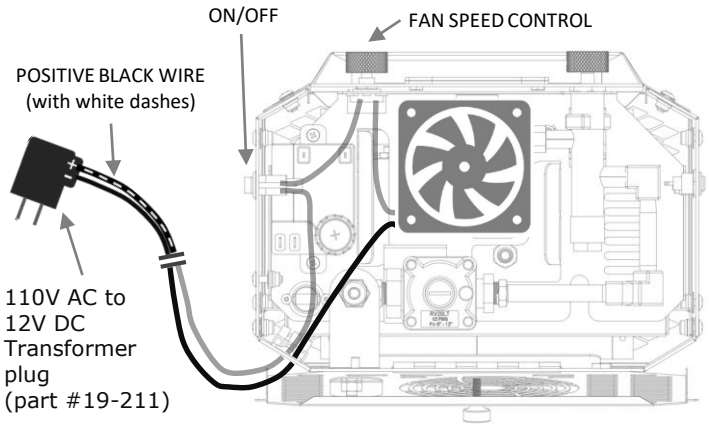

Fig 5

DC CONNECTION

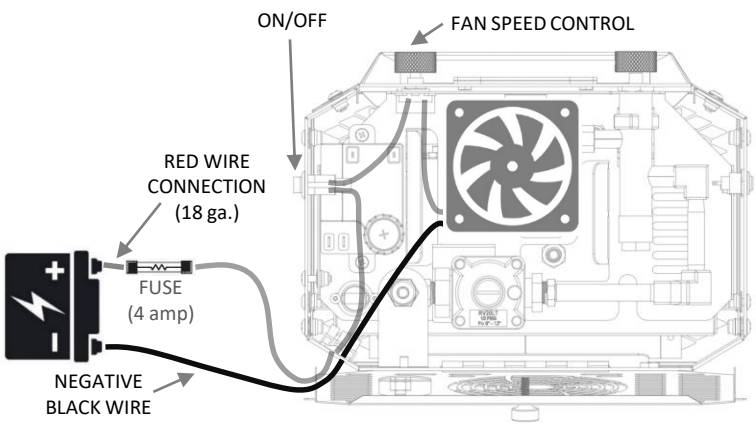

Fig 6

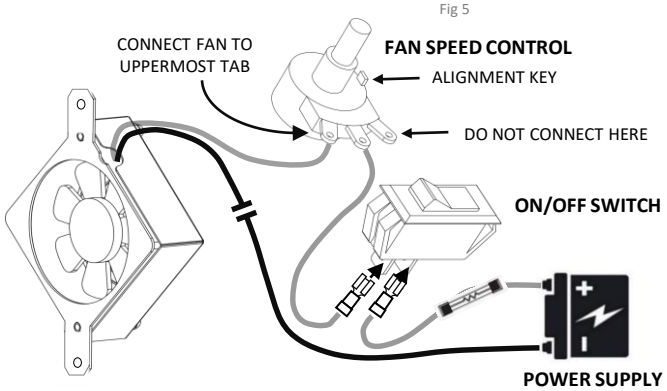

Fig 7

FAN WIRING (Fig 7)

The red fan wire connects to the uppermost tab on the speed control. Verify which tab is uppermost by selecting the tab farthest from the alignment key .

Connect the middle tab of the speed control to the offset tab on the ON/OFF switch.

Connect the middle tab on the ON/OFF switch to the power supply.

Connect the negative (black) wire to the negative lead of your power supply.

IV. REPLACEMENT FAN INSTALLATION

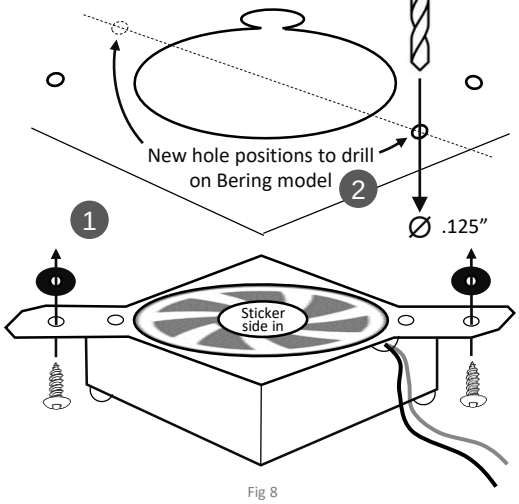

Fig 8

01-999H & 01-997H: **Antarctic, Pacific, Adriatic, Atlantic, Lofoten, Bristol, Bering***

- **If you are replacing an older model fan, or the fan in a fireplace manufactured before 2024, the speed control will also need to be replaced with a new one. Replacing only one of these components may result in limited fan power and adjustment.**
- Remove the old fan by disconnecting the wires from it and undoing the 2 screws securing it in place.
- With the old fan removed, attach the replacement fan assembly using the screws and washers **(1)** Tighten the screws to secure the fan in place.
- Remove any connecting tabs from the existing appliance wiring, and attach the red power wire from the speed control to the new fans red wire using a splice or terminal block.
- Attach the negative wire from your power supply to the new fans black wire.
- The fan should be mounted with it’s sticker side facing into the appliance, toward the burner.
- This fan mounts below the burner on the Antarctic, Pacific, Bering, Adriatic and Atlantic models. The fan is mounted behind the appliance on the Lofoten and Bristol models.
- ***BERING**: On a Bering model, new holes must be drilled to mount the fan to allow it to clear the fuel piping below the stove **(2)**

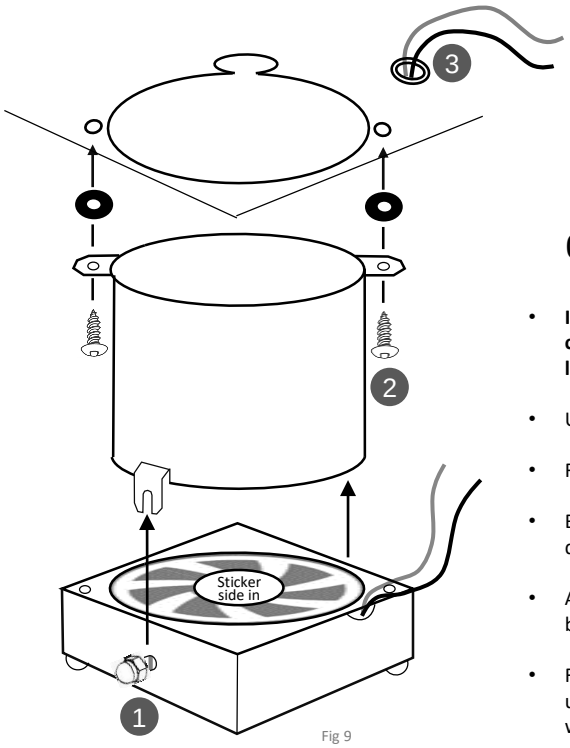

Fig 9

01-999-NEWALA & 01-997-NEWALA: **Newport, Alaska**

- **If you are replacing an older model fan, or the fan in a fireplace manufactured before 2024, the speed control will also need to be replaced with a new one. Replacing only one of these components may result in limited fan power and adjustment.**
- Undo any screws securing the bottom panel of the heater and remove it.
- Remove the old fan by disconnecting the wires from it and undoing the 2 screws securing it in place.
- Before installing the 01-999-NEWALA replacement fan, you’ll need to remove the screws & washers and detach the fan box from the cowling by loosening the 2 acorn nuts on its sides **(1)**
- Attach the fan cowling to the panel using the washers and screws provided **(2)** The washers should sit between the cowling and the panel it’s being attached to.
- Feed the wires of the new fan through white grommet in the bottom panel of the heater **(3)** Once through, using a splice or terminal block, connect the new fans wiring to the wires disconnected from the old fan (If the wires have tabs attached, it will be necessary to cut these off and strip the wires)
- With the wiring done, reattach the bottom panel. With the bottom panel replaced, secure the fan box outside it by slotting it onto the cowling brackets and tightening the acorn nuts to secure it in place. The fan guard should face outward, and the side of the fan bearing a sticker should face into the heater.

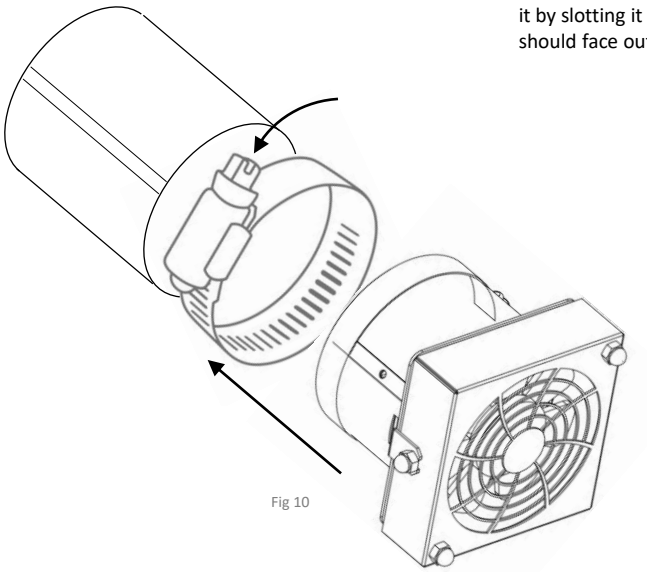

Fig 10

01-999-SIG: **Sig Marine**

- **If you are replacing an older model fan, or the fan in a fireplace manufactured before 2024, the speed control will also need to be replaced with a new one. Replacing only one of these components may result in limited fan power and adjustment.**
- Sig Marine diesel appliances (no longer in production) are equipped with a collar beneath the burn chamber.
- The replacement fan has a split cowling attached which can be drawn tight over the collar by means of the supplied hose clamp.
- Splice or use a terminal block to connect the new fans red wire to the red power wire from the speed control.
- Attach the negative wire from your power supply to the new fans black wire.

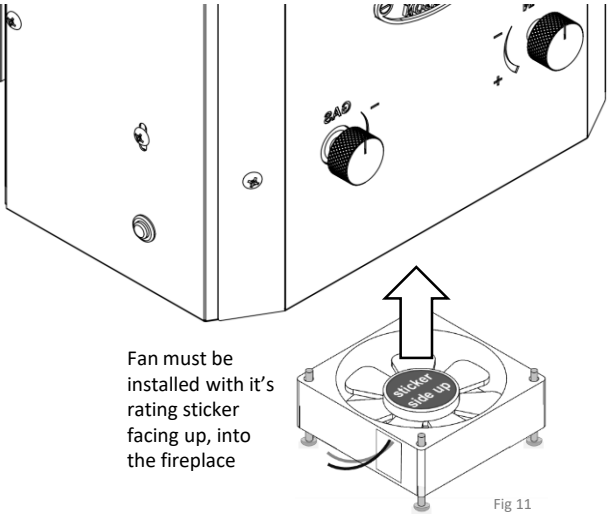

Fan must be installed with it's rating sticker facing up, into the fireplace

Fig 11

01-999P

- **If you are replacing an older model fan, or the fan in a fireplace manufactured before 2024, the speed control will also need to be replaced with a new one. Replacing only one of these components may result in limited fan power and adjustment.**
- On a P9000 & P12000 model, remove the screws on the bottom of each side that hold in the bottom panel. With the screws removed, the bottom panel will drop out.
- On an Explorer model, the bottom panel of the heater hinges down to provide. Unscrew the single connecting screw visible on the bottom panel and pull down.
- Remove the old fan by disconnecting the wires from it and undoing the 2 screws securing it in place
- On the Newport P9000 & P12000 models, the boxer fan is secured with 2 self tapping screws. A replacement fan for these models is attached in the same way. The fans have 4 mounting holes – mounting screws must be positioned in opposite corners
- If you are replacing a metal fan in an older P9000 or P12000 model, the new fan will fit the same mounting holes with the use of longer screws (included)
- If you are replacing the fan in a Newport Explorer model, the fan is attached using 3 long 8-32 bolts. Remove all the 3 bolts to remove the old fan and disconnect its wires. Install new fan in the same manner, and connect the replacement fan wires

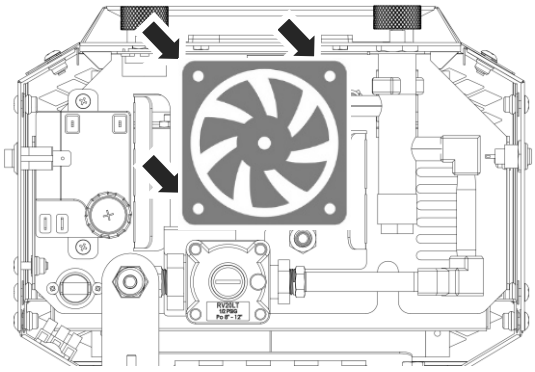

Fig 12

EXPLORER

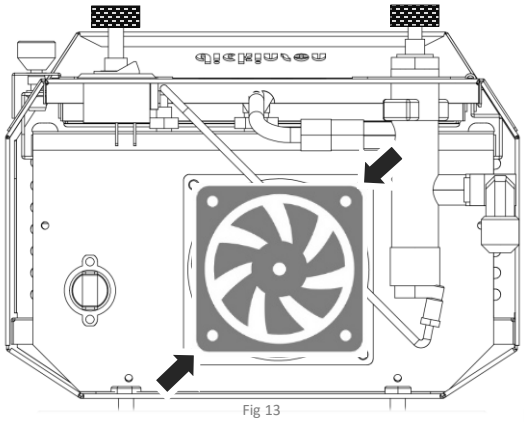

Fig 13

P12000

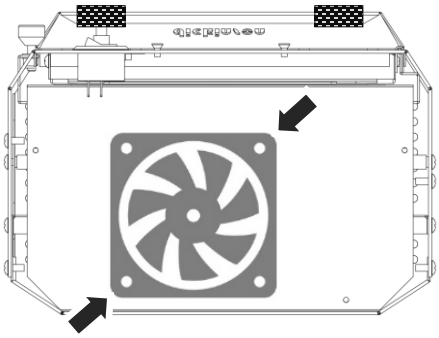

Fig 14

P9000

V. TROUBLESHOOTING

Problem	Possible causes	Solution
Fan noise	High pitched whine – indicates	Fan is receiving too much power from power source
	Low rumbling sound – indicates	Fan is receiving too little power from power source
	Flicking or rubbing sound – indicates obstruction	Check for wiring or other obstruction resting on the fan blades
	Scraping noise – fan mounting may be over-tightened	Make sure screws securing fan are not deforming its housing
	Normal fan noise, but louder than expected	Fan may be receiving too much power
Fan doesn't run	Fan may be disconnected from power supply	Reconnect fan to power
	12v power supply system may have blown fuse	Inspect system for blown fuse
	Disconnected wiring	Examine fan/speed control/switch for disconnected wiring
	Fan motor has reached end of life	Replace fan
Fan speed doesn't adjust	Replacement fans may require a replacement speed control (see page 1, appliance fan changes)	Replace speed control
	Rheostat failure	Replace speed control
Fan runs low when set to high	Speed control is wired incorrectly	See, page 3, fig 7 to correct wiring
	Mismatched fan and speed control	(see page 1, appliance fan changes)
Fan runs on high when set to low	Speed control is wired incorrectly	See, page 3, fig 7 to correct wiring
	Mismatched fan and speed control	(see page 1, appliance fan changes)
Fan only runs on high setting	Speed control not receiving enough power	Check power supply voltage
	Mismatched fan and speed control	(see page 1, appliance fan changes)
Fan doesn't spread hot air	Fan may be installed upside-down	Verify that fan is installed with the correct orientation (page 4, fig 11)
	Obstruction within fireplace shell	Make sure no dust/cobwebs are obstructing vents & spaces inside
	Obstructions on fan motor	Make sure no dust/cobwebs have settled inside fan
On/off switch doesn't control fan	Check wiring for on/off switch (page 3, fig 7)	Connect wiring as shown in diagram (fig 7)