NATURAL DRAFT DIESEL HEATER

INSTALATION & OPERATING INSTRUCTIONS

Over 90 Years In Production!

These installation and operating instructions apply the following Dickinson models:

Newport | **Alaska**

Lofoten | **Antarctic**

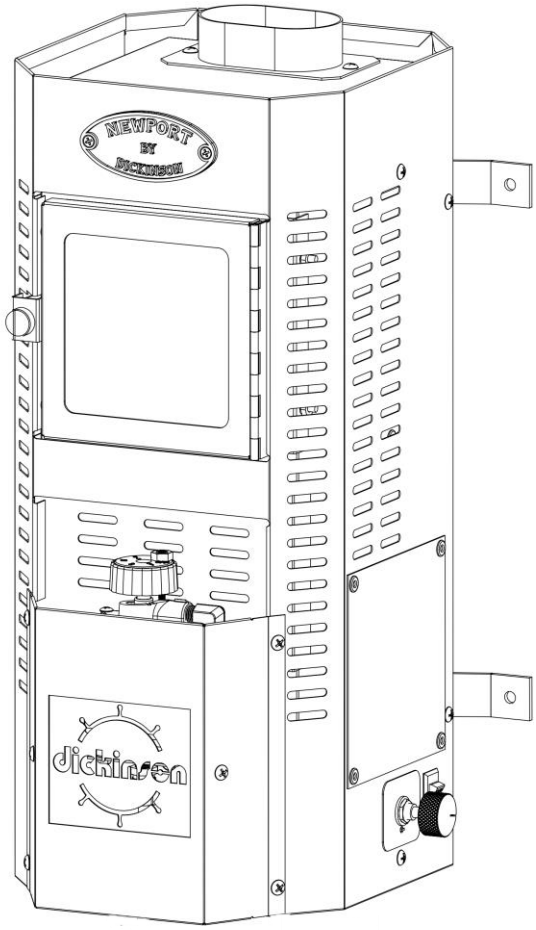

Dickinson Marine #101 - 17728 66 Ave,
Surrey, BC, Canada, V3S 7X1
Email: info@dickinsonmarine.com

Caution! Failure to adhere to the safety warnings listed in this manual could result in damage to property or severe personal injury!

Please familiarize yourself with the contents of this manual before installing and operating the appliance

Serial #: _

ABYC
Setting Standards for Safer Boating

For Marine Use Only

INSTALLER: Leave this manual with the appliance.

CONSUMER: Retain this manual for future reference.

All rights reserved. No part of this manual may be reproduced without permission in writing from Dickinson Marine. Dickinson also reserves the right to modify or change without notice, any materials, applications, equipment, accessories, and/or prices. All dimensions, measurements and weights are approximate.

www **dickinsonmarine.com**



info@dickinsonmarine.com



@dickinsonmarine

YouTube **@dickinsonmarine1932**



/dickinsonmarine

We'd love to see your Dickinson Marine pictures & videos, please follow, tag us and share!

Service notes:

Appliance model: Fuel Type:

Serial No.: Date of purchase:

Serial No.:

TABLE OF CONTENTS

Page#

1 ....Service notes

2 **1. INTRODUCTION**
3 ....General Appliance Warnings
4 ....Warranty
5 ....Conditions & Limitations

6 **2. ABOUT THIS APPLIANCE**
6 ....About This Appliance
7 ....Produced In British Columbia For Over 90 Years
8 ....FAQ - Frequently Asked Questions
9 ....Dimensions & Models
10 ....Safety Clearances
11 ....Ratings & Specifications
12 ....Natural Draft
13 ....Internal Burner Components
14 ....The Oil Metering Valve

15 **3. INSTALLATION GUIDE**
15 ....Installation Warnings
16 ....Where To Install The Appliance
16 ....Heating Capacity
17 ....Items Specific To Sailboats
18 ....Choosing An Optimal Install Location
19 ....Install Checklist
20 ....Chimney Variations
21 ....Unsupported Chimney Configurations
22 ....Planning The Install
23 ....The Deck Fitting Install (Charlie Noble)
25 ....Flue Collar Connection
26 ....Fuel Metering
28 ....Fuel Supply System
30 ....Pump Installation
31 ....Draft Assist Fan Wiring
32 ....Hot Water Coils

33 **4. OPERATING INSTRUCTIONS**
33 ....Read Before Lighting
35 ....Operating Instructions
36 ....Adjustments
38 ....Fuel Air Mixture
39 ....Operating Tips
40 ....Barometric Damper Settings
40 ....Testing The Draft

41 **5. MAINTENANCE**
41 ....System Maintenance
42 ....Fuel Filter Maintenance
42 ....Fuel Line Maintenance
42 ....Burner Maintenance
42 ....Chimney & Cap Maintenance
43 ....Metering Valve Maintenance
44 ....Fuel Pump Maintenance

45 **6. TROUBLESHOOTING**
45 ....List of Troubleshooting Guides
46 ....Appliance Produces Soot
46 ....Appliance Blows Out
47 ....Not Producing Enough Heat
47 ....Inconsistent Fuel Flow
48 ....Valve Overflowing
48 ....Valve Leaking Fuel
49 ....Flames Burning Inside Burner Pot
49 ....Fan Operation Is Noisy

50 **7. GLOSSARY OF TERMS**

51 **8. LIST OF ILLUSTRATIONS**

1. INTRODUCTION

DICKINSON'S Ltd.
"SINCE 1932"

Since 1932, Dickinson Marine have been among the most well known producers of marine appliances on the market. The uncompromising quality and legendary robustness of Dickinson appliances have earned them a place in the hearts of sailors and fishing crews for decades. Still manufactured today using the most modern methods & high quality materials available, Dickinson stoves & heaters are now available for more applications than ever. Every Dickinson appliance is assembled by highly trained personnel and undergoes rigorous quality controls at every step of the process. At Dickinson we're pleased to be able to offer you tough & reliable heating systems to keep you warm wherever your adventures may to take you.

Thank you for choosing a Dickinson Appliance! In order to get the most out of your new Dickinson appliance, please read all of the warnings and technical specifications found on the following page and throughout this instruction manual.

CAUTION! FAILURE TO ADHERE TO THE SAFETY WARNINGS LISTED IN THIS MANUAL COULD RESULT IN DAMAGE TO PROPERTY OR SEVERE PERSONAL INJURY!

GENERAL APPLIANCE WARNINGS

- Do not operate this appliance unattended.
- Do not operate this appliance without an open fresh air vent.
- Always check the appliance, tank and hose connections prior to each use
- This appliance is calibrated for no. 2 Diesel fuel. NEVER use gasoline!
- Never use charcoal, lava rocks or any other source of solid fuel in this appliance.
- Ensure that flames are positioned above the burner ring when operating the appliance.
- Never use or store gasoline or any other flammable vapors or liquids in or near your appliance
- Keep children and pets away from the appliance. DO NOT allow children to operate appliance.
- Do not leave this appliance unattended when in use.
- Keep any electrical cords away from the appliance when it's in use
- DO NOT operate while under the influence of drugs or alcohol
- Do not use any other fuel metering device other than those manufactured by Dickinson Marine.
- Parts of the appliance become very hot when in use. To avoid burns DO NOT touch any surfaces which may be hot.
- This appliance is not intended for commercial use.
- Adhere to all clearances listed in this manual.
- Do not use this appliance if any part has been underwater. Immediately call a qualified service technician to inspect the appliance and to replace any part of the control system and any fuel control which has been underwater.
- Toddlers, young children, and others may be susceptible to accidental contact burns. A physical barrier is recommended if there are at-risk individuals present. To restrict access to an appliance, install an adjustable safety gate to keep toddlers, young children, and other at-risk individuals out of the room and away from hot surfaces.
- Clothing or other flammable materials should not be placed on or near the appliance.
- Any safety screen, guard, or barrier removed for servicing an appliance must be replaced prior to operating the appliance.
- Label all wires prior to disconnection when servicing controls. Wiring errors can cause improper and dangerous operation. Verify proper operation after servicing.
- Installation and repair should be done by a qualified service person. The appliance should be inspected before use and at least annually by a professional service person. More frequent cleaning might be required due to unbalanced operation etc. It is imperative that control compartments, burners, and circulating air passageways of the appliance be kept clean.



WARNING!

Fire hazard

DEATH OR SERIOUS INJURY CAN RESULT FROM FAILURE TO FOLLOW THESE INSTRUCTIONS

- DO NOT operate this appliance unattended
- NEVER light a hot or warm burner. Lighting a hot burner may result in an explosion.
- This appliance MUST NEVER be operated without an open fresh air vent
- DO NOT use a pressurized fuel tank to supply this appliance
- NEVER burn gasoline in this appliance
- For your safety install a CO (carbon monoxide) alarm in the vicinity of the appliance.
- Follow the installation instructions in this manual
- Turn off appliance when refueling
- DO NOT plug or cap the valve's overflow fitting
- DO NOT allow children or vulnerable persons to operate this appliance
- Use only stainless steel chimney pipe
- DO NOT use galvanized, plated or aluminum chimney pipe
- Use only parts & accessories made for or sold for this appliance by Dickinson

WARRANTY

We at Dickinson wish to maintain a reasonable and easy system for returns, warranty, returns and exchanges. To accomplish this, we would like to inform you of some helpful guidelines and procedures to use and follow when sending back product to the Dickinson Marine. All correspondence regarding returns, warranties and exchanges will go through the factory of Dickinson Marine in Surrey, BC, Canada and the product must be returned to this location.

DICKINSON WARRANTY POLICY

Dickinson Marine appliances are covered under limited warranty for a period of one year dated from the purchase of the product by the end user with proof of purchase or a registered warranty. The warranty card at the bottom of this page should be copied for your records and returned to Dickinson to activate your warranty within 90 days of your purchase. You can also activate it online at dickinsonmarine.com. In order to activate your warranty the warranty card below must be mailed back to us or the warranty must be registered online. In order to access after sales service within the warranty period without completing your warranty registration, proof of purchase must be presented.

1. Customers can contact Dickinson Marine directly to settle any warranty issues. We are pleased to help. Email us at: info@dickinsonmarine.com

2. Products that are demonstrably older than the warranty period or those that have obviously been misused will not be returned, exchanged, or repaired.

3. If a customer is returning a complete product they believe to be defective, we ask them to confirm that the product has been assembled and put into use correctly. Dickinson Marine will not provide credit for used products that are not defective. In these cases, it is best to call the factory to determine if the product is being used correctly, has been assembled correctly or is in fact defective.

4. All products being sent back to Dickinson Marine must have a Return Authorization Number. Contact us via e-mail info@dickinsonmarine.com to obtain a Return Authorization Number (RA#). This allows us to track and process your return. Once you have received an RA# from us, ship to the address below. We recommend you ship using the mail service insured and retain a tracking number. Customers are responsible for the shipping costs for all returns and exchanges. Please note that in order to obtain an RA# number we may ask you to provide proof of purchase, photographs or video recordings demonstrating the issue in question.

Dickinson Marine Returns
#101-17728 66th Avenue
Surrey, BC
V3S 7X1, Canada

Non-defective Returns & Exchanges: Dickinson reserves the right to apply a 20% restocking fee for non-defective returns & exchanges. An RA # will be needed from the factory to facilitate any return. Credits will be made at the last purchased price for that part number.

PLEASE FILL OUT AND MAIL, FAX OR EMAIL US A COPY OF THIS CARD TO REGISTER YOUR WARRANTY, OR REGISTER YOUR WARRANTY ONLINE AT dickinsonmarine.com

Dickinson Marine
#101-17728 66th Avenue,
Surrey, BC
V3S 7X1 Canada
Fax: 604-574-8659
E-mail:
info@dickinsonmarine.com
Website:
www.dickinsonmarine.com

WARRANTY CONDITIONS & LIMITATIONS

WARRANTY PROVISIONS: Dickinson warrants this product to be free of defects in workmanship and materials for a period of one year. This warranty is limited to claims submitted in writing within a one-year period following the date of purchase. If any part of your new product fails because of a manufacturing defect within the warranty period Dickinson offers to replace said parts free of charge, provided, however, that such parts have not been improperly repaired, altered or tampered with or subjected to misuse, abuse or exposed to corrosive conditions. This warranty, however, is limited by certain exclusions, time limits and exceptions as listed below. Read these limitations and exclusions carefully.

TIME LIMIT: This warranty is given too and covers only the original purchaser. Coverage terminates one year from the date of purchase for parts replacement.

EXCLUSIONS: This warranty does not cover or include : (a) Any normal deterioration of the product and appearance of items, due to wear and/or exposure; (b) any guarantees, promises, representations, warranties or service agreements given or made by an authorized distributor or other person selling this product, other than those specifically stated herein; (c) any damage or defect due to accident, improper repair, alteration, unreasonable use including failure to provide reasonable and necessary maintenance, misuse or abuse of the equipment, or exposure to corrosive conditions. This warranty is conditioned upon normal use, reasonable and necessary maintenance and service of your product, and written notice being given promptly upon Buyer's discovery of a warranty claim, pursuant to paragraph 6 below. Reasonable and necessary maintenance is 29 maintenance which you are expected to do yourself or have done for you. It is maintenance, which is necessary to keep your product performing its intended function and operating at a reasonable level of performance.

DAMAGE LIMITATION WARNING: IN NO EVENT SHALL Dickinson BE LIABLE FOR ANY INCIDENTAL OR CONSEQUENTIAL DAMAGES, INCLUDING (BUT NOT LIMITED TO) LOSS OF USE OF THE PRODUCT, LOSS OF TIME, INCONVENIENCE, EXPENSES FOR TRAVEL, LODGING TRANSPORTATION CHARGES, LOSS BY DAMAGE TO PERSONAL PROPERTY OR LOSS OF INCOME, PROFITS OR REVENUE.

ORAL OR IMPLIED WARRANTY LIMITATIONS: The foregoing warranty is exclusive and in lieu of all other warranties, written or oral, expressed or implied, including but not limited to any warranty or merchantability or fitness for a particular purpose.

TRANSFER LIMITATIONS: This warranty is not assignable or transferable. It covers only the original purchaser.

CLAIM PROCEDURE: In the event of a defect, problem or that a breach of this warranty is discovered, in order to protect any warranty rights you must promptly notify Dickinson. Give name, address, and model name, location of unit, description of problem and where you can be reached during business hours.

RESERVED RIGHT TO CHANGE: Dickinson reserves the right to make changes or improvements to products it produces in the future without imposing on itself any obligations to install the same improvements in the products it has previously manufactured.

SECOND OR SUBSEQUENT OWNER: Dickinson does not give any warranty to secondary or subsequent purchasers, and it disclaims all implied warranties to such owners.

INSPECTION: To assist you in avoiding problems with your product and to validate this warranty you are required to do the following: (a) read the warranty; (b) inspect the product. Do not accept delivery until you have examined the product with your supplier; (c) ask questions about anything you do not understand concerning the product.

OWNER REGISTRATION: Fill out the WARRANTY CARD within 90 days from the date of delivery.

WARRANTY: WARRANTY COVERAGE REQUIRES THE RETURN OF THE FILLED OUT WARRANTY PAGE IN THIS MANUAL, OR THE WARRANTY MUST BE REGISTERED ONLINE. YOU MUST REGISTER YOUR WARRANTY WITH US IN ORDER FOR THE APPLIANCE TO BE COVERED UNDER OUR LIMITED WARRANTY.



Please register your warranty with Dickinson Marine. Fill out and send back this warranty registration, or register online at dickinsonmarine.com. Make sure to include the serial number of your appliance for our records.

No warranty will be extended for improper installations. Use of any unapproved materials, equipment, installation procedures and/or unsafe usage will result in a voided warranty. Do not use any substitutes for components such as the regulator, valve, burner or fan other than ones supplied & approved by Dickinson. Dickinson Marine accepts no liability for any damage or loss of service resulting from unapproved modifications.

DICKINSON WARRANTY REGISTRATION FORM

(PLEASE PRINT)

Name: _____

Address line 1: _____

Address line 2: _____

Telephone: _____

E-mail: _____

Model name: _____

Serial No.: _____

Date of purchase: _____

Purchased from: _____

I confirm have read and understand the Limited Warranty and the contents of the Instruction Manual and agree to the terms and conditions.

Date: _____ Signature: _____

2. ABOUT THIS APPLIANCE



Certified for Marine install & use



Over 90 years in production!
See page 7

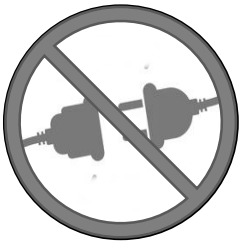

Use of power optional

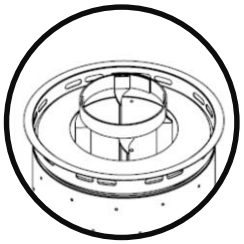

Tried & tested natural draft burner design.

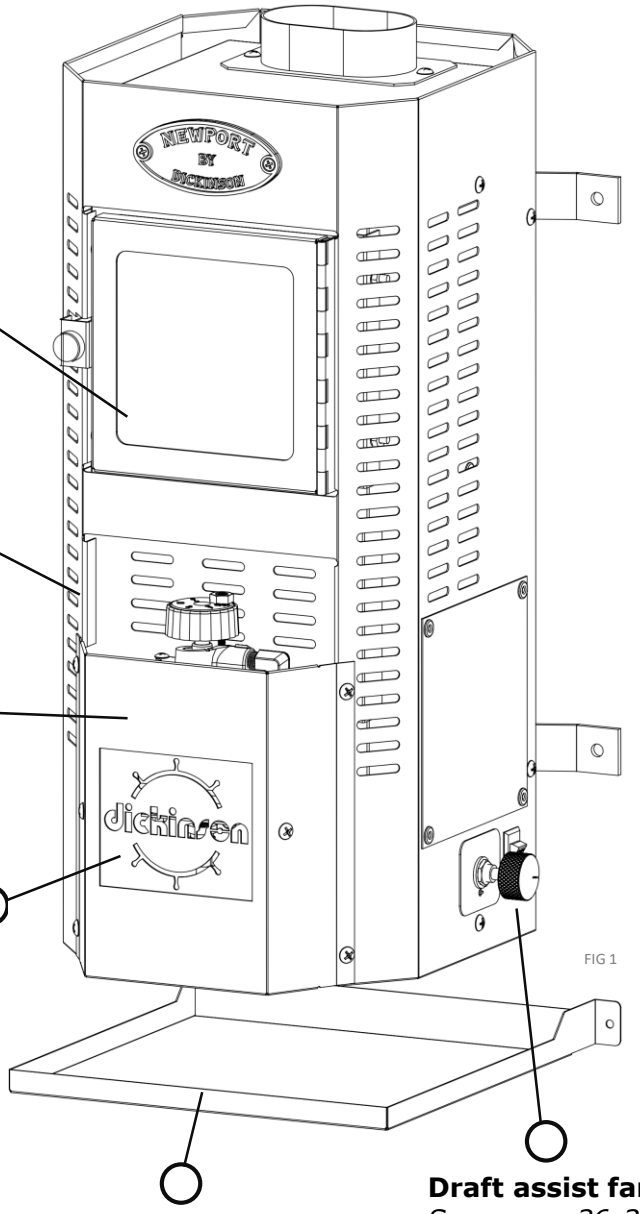

FIG 1

Direct burn chamber access
See page 13 for burner info

Durable stainless steel body & shell

Diesel Metering Valve
See page 43 for diesel valve maintenance

Signature Dickinson styling & construction
See page 7 to see how Dickinson appliances have evolved over the decades.

Drip tray
Catches any leaks or spillage that may occur during maintenance

Draft assist fan controls
See pages 36-37 for operating instructions

Proudly manufactured in British Columbia for over 90 years!

1932

Dickinson's established

1940

1950

1960



The Dickinson POLAR model from the 1960's, available in both coppertone finish and avocado green.



A very early Dickinson Alaska, equipped with a Singer metering valve, cooktop and nickel plated sea-rail. Also available in multiple finishes.

1970



An evolution of the earlier Polar model and precursor to the Dickinson Antarctic, the Arctic was fitted with a cast iron top and legs. Unlike the Antarctic it had no door and had to be lit and serviced through an opening on top.

A later 1975 Dickinson Alaska (below) where we see a departure from the coloured enamel finishes of the 50's & 60's in favor of the all stainless steel construction that remains a distinctive feature of Dickinson marine appliances.



1980



Made for only 3 years from 1980-83, the Dickinson Chesapeake (left) had the smallest breeze burner ever fitted to a Dickinson heater. It was also one of the first models to feature a Dickinson made oil metering valve. Despite its short production run the Chesapeake was a crucial step forward for Dickinson both in terms of fuel metering and styling.

1990



2000



Two Newports, from the 1990's (above, right) and the 2000's (left) begin to display the hallmarks of modern Dickinson design. Most notably the heavy duty stainless steel shrouds perforated for heat relief.

2010

2020

Image Credit: North Shore Heritage Preservation Society

REA 326-278 SHIPYARDS, VANCOUVER, N.N.W' 6-11-42 100'

FREQUENTLY ASKED QUESTIONS

Dickinson Natural Draft Stoves & heaters

Dickinson diesel appliances, both our stove and heater models, are tough, robust professional appliances originally intended for commercial fishing vessels and other marine industry uses. In British Columbia it remains pretty common to board a fishing vessel and find a Dickinson stove that's been serving up meals for over 40-50 years. While oil ranges have become largely obsolete outside of an offshore environment, there is no denying their lasting ability to produce and distribute heat efficiently even without electrical power, using nothing but gravity and fuel.

What is a natural draft appliance?

A natural draft appliance produces heat by burning a mixture of vaporized fuel & air *(page 12, fig 11)*

When this mix is ignited, the result is clean combustion which gives off hot exhaust gasses. The Dickinson natural draft appliance uses this to generate heat for the cabin, cooking and water heating, while the exhaust itself leaves via the chimney.

As the exhaust rises up the chimney, fresh air from the cabin is sucked into the burner to replace it. This fresh air feeds the flames. In order not to starve your appliance of fresh air, every cabin containing a natural draft appliance must have an open fresh air vent when the appliance is running.
See page 12

What do I need to install this appliance?

Each natural draft appliance install will require it's own uniquely configured chimney. Stainless steel chimney pipe, elbows, fittings, caps and accessories are all available to purchase from Dickinson dealers. Mapping out the chimney run and measuring carefully will help to determine what chimney parts are required.

Fuel delivery to the appliance can be accomplished by means of gravity feed or an impulse pump system. Fuel filters are also recommended.
See page 29

Where can I install this appliance?

Dickinson natural draft diesel appliances are approved by the American Boat & Yacht Council for install onboard boats. They are not certified or approved for domestic or land based commercial use. Installing one in a non-boat interior or other vehicle may affect insurance coverage. Wherever this appliance is installed it will require adequate safety clearances from combustibles and a minimum 4 foot chimney rise.
See page 16

How safe will children, at risk individuals and pets be around this appliance?

Everyone sharing the cabin or space heated by a Dickinson diesel appliance should be aware of the potential hazards it presents. The surfaces of the appliance including it's stainless steel panels and chimney become hot enough to cause burns both during and after use.

A poorly maintained appliance represents additional risks as it will result in unbalanced combustion which may overheat the appliance. An appliance that is not regularly and properly maintained can become a potential fire hazard.
See pages 41-43

How important is the chimney?

The height and shape of the chimney attached to the appliance are the most important considerations in choosing a location for install. Choosing a location that will not allow for a tall enough chimney stack, or choosing a location that will require multiple bends in the chimney may result in poor performance from appliance
See page 21, fig 23

The chimney height will ultimately determine the strength of the upward draft it's able to generate. Without a strong upward draft, the appliance cannot draw in adequate fresh air or vent exhaust gasses efficiently. Make sure your proposed install location will allow for this. If you have concerns or questions you can email Dickinson Marine for support.
See page 20

What is the metering valve? (Carburetor)

The metering valve (often called the carburetor) is a box-like device made from cast aluminum, housing a float switch. The job of the float switch is to maintain the oil level inside the valve at a steady level. It does this by automatically opening/closing the fuel inlet, rising and falling to maintain the oil level no matter which setting the valve is set to.
See pages 26-27

Can this appliance run on alternative fuels?

It can. The standard metering valve comes fitted with a metering stem machined for #2 diesel fuel that will not meter alternative fuels with accuracy. However, specially machined metering stems for the accurate metering of kerosene oil and stove oil (#1 diesel) are available from Dickinson.

Can the appliance be operated without electrical power?

Yes. While the standard draft assist fan on the appliance runs on an 12v / 0.4 amp power source, it's not required in order to operate the appliance. The appliance can be lit, run and balanced and run indefinitely without the use of the fan. The light-up procedure will differ somewhat depending on fan availability.
See page 36-37

Have other questions?

If you have any questions about our product that are not answered by this manual, please Email them to info@dickinsonmarine.com

DIMENSIONS & MODELS

NEWPORT

00-NEW

overall
W: 8.50”
H: 19.75”
D: 10.50”

Flue ø : 3”
Burner ø : 6”
Max BTU: 16,250
Valve cal.: 3D
Coil options: 1 turn
Fan control: Built-in

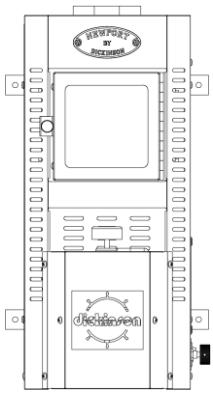

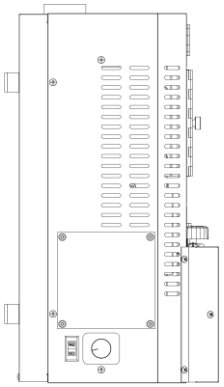

22 lbs

FIG 2

ALASKA

00-ALA

overall
W: 8.75”
H: 21.50”
D: 9.50”

Flue ø : 3”
Burner ø : 6”
BTU: 16,250
Valve cal.: 3D
Coil options: 1 turn
Fan control: Built-in

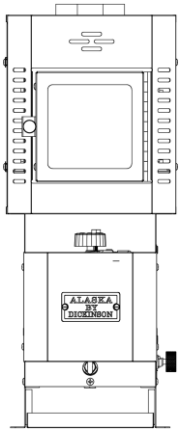

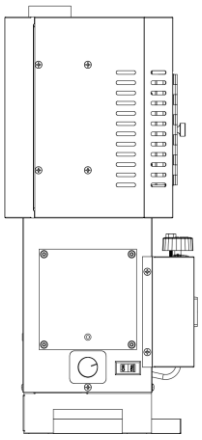

19 lbs

FIG 3

LOFOTEN

00-LOF

overall
W: 10.75”
H: 18.00”
D: 17.00”

Flue ø : 4”
Burner ø : 6”
BTU: 16,250
Valve cal.: 3D
Coil options: 1 & 2 turn
Fan control: External

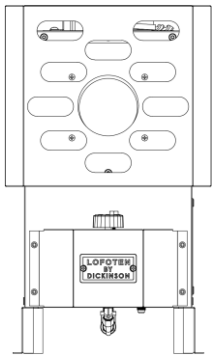

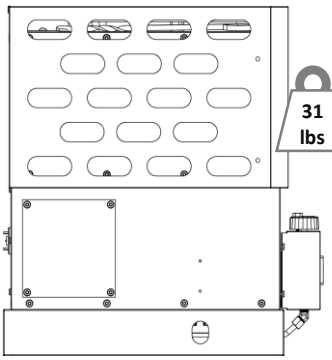

31 lbs

FIG 4

ANTARCTIC

00-ANT

overall
W: 13.00”
H: 25.00”
D: 14.00”

Flue ø : 3”
Burner ø : 6”
BTU: 16,250
Valve cal.: 3D
Coil options: 1 & 2 turn
Fan control: External

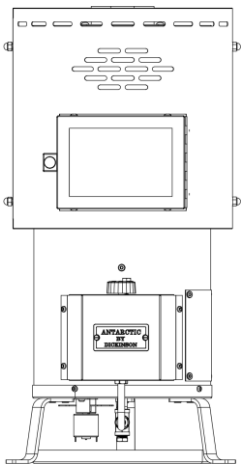

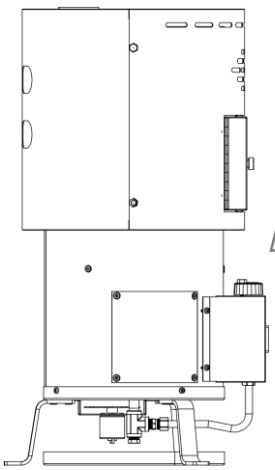

27 lbs

FIG 5

SAFETY CLEARANCES

TWO INCH MIN. CLEARANCE TO PROTECTED SURFACE
(EXCEPT WALL MOUNTED MODEL)

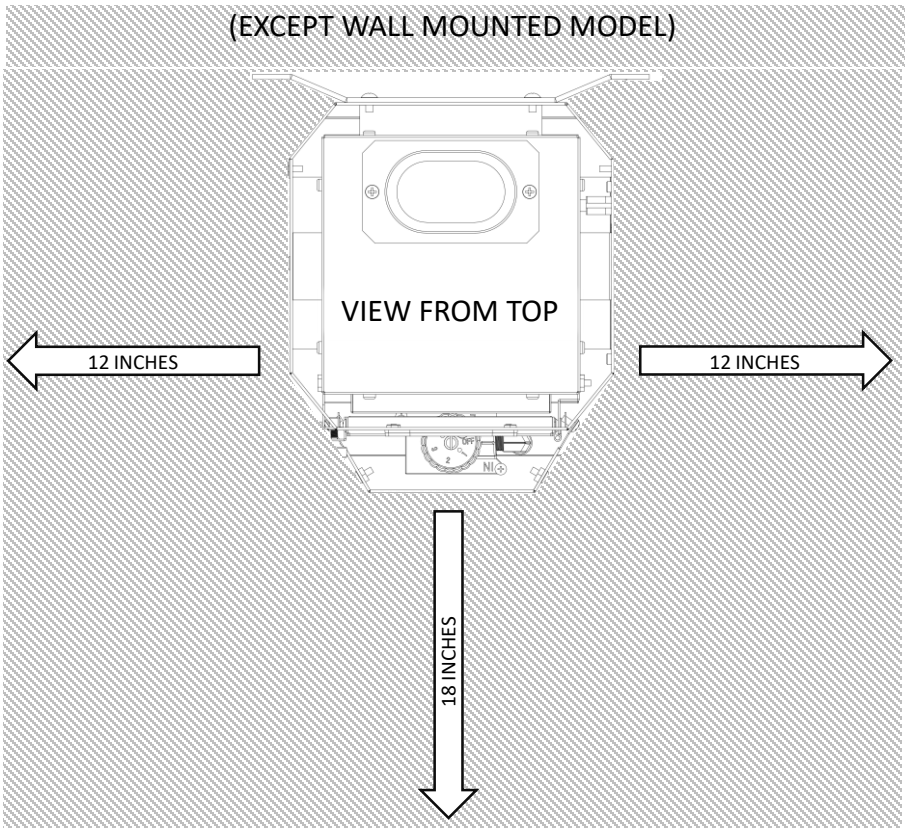

18 INCH MIN. CLEARANCE TO NEAREST SURFACE

FIG 6

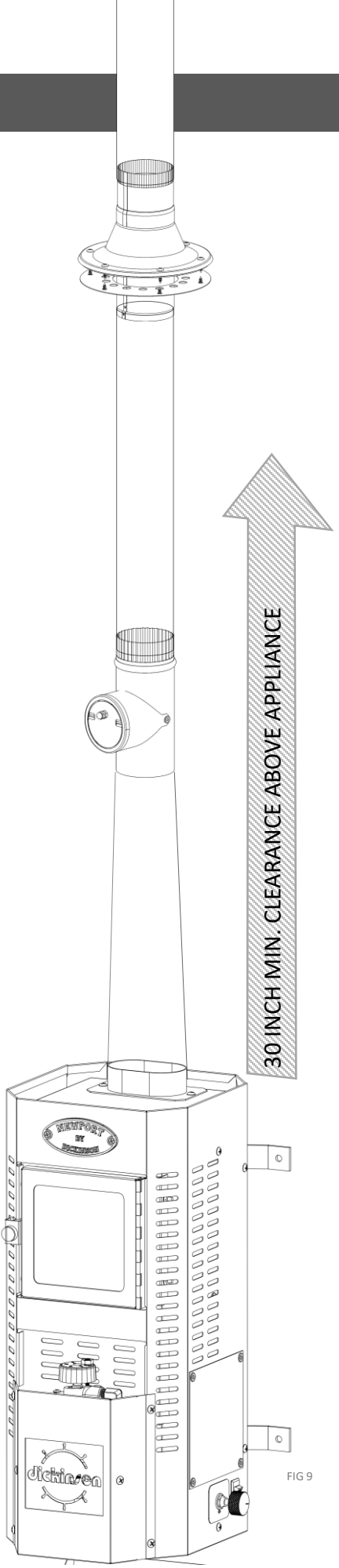

FIG 9

Examples of protected surfaces

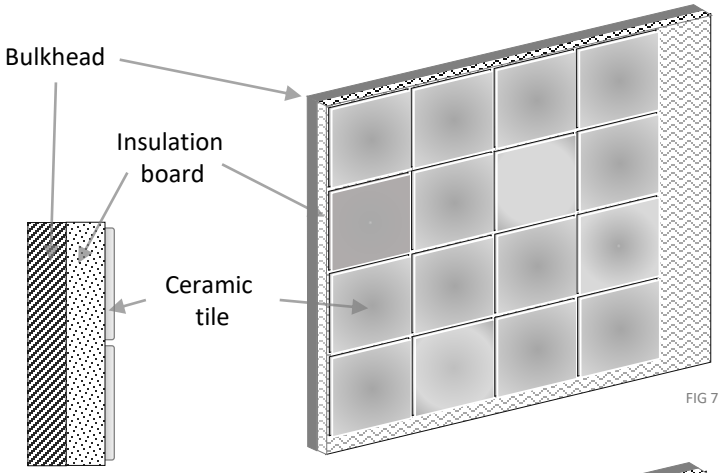

FIG 7

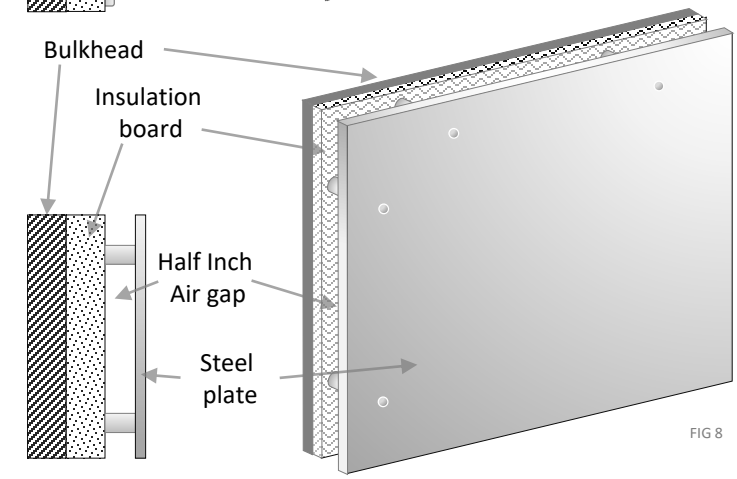

FIG 8

RATINGS & SPECIFICATIONS

Part no's.	00-NEW, 00-ALA, 00-LOF, 00-ANT
Model's	Newport, Alaska, Lofoten, Antarctic
Product type	Natural Draft Marine Diesel Heater
Conforms to	ABYC A-07, Boat Heating Systems
standard electrical input rating	12 Vdc, 0.4 Amp
Fuel type	#2 Diesel fuel (automotive diesel)
Max. fuel input rating (pump)	3 PSI
Max. Capacity	800 sq. ft
Ignition source	manual
Fuel control	manual
pilot	No
Thermostatic control	No
BTU/hr (00-ADR, 00-BER, 00-BRI, 00-PAC)	16,250
High Heat Safety Device	Spring loaded, built into fuel valve
Valve Calibration	3D
Appliance body	Stainless Steel
Appliance shroud	304 Stainless Steel
Draft Assist Fan	12 Vdc; 0.4 amp; 67 CFM; 44.2 dbA
Resistor rating	250 Ohms
Chimney pipe diameter (00-NEW, 00-ALA, 00-ANT)	⌀ 3"
Chimney pipe diameter (00-LOF)	⌀ 4"
Venting lengths (in feet)	Min. 4 – Max. 8
Ducting wall thickness	.028"
Window glass	Transparent Ceramic Glass Panels
Thermal shock resistance °F	≤ 1292
Window Gasket	None
Clearances (inches)	Sides: 12, Front: 18, Above: 30, Behind: 2 to protected surface, Below: 6
Mounting	Facing Fore or Aft
Port/Starboard Mounting	With Valve mounted to side of unit

THE APPLIANCE PART NO. INCLUDES

1x Natural Draft Diesel Appliance
1x Drip Tray
1x Burner ring
1x Super heater
1x Low Sulfur Baffle
1x Auger
1x Lid Lifter (00-LOF only)
1x Speed Control Box (00-LOF, 00-ANT only)



What's In The Box?
In case of any questions regarding the contents of your appliance packaging please enquire at <info@dickinsonmarine.com>

NATURAL DRAFT

What is Natural Draft?

A natural draft appliance relies on the natural chain reaction kick started by lighting an oil fire inside the burner. Creating heat in the burner leaves it nowhere to go but up, heating up the appliance body and the chimney. As the chimney gets hot, it begins to draft or suck the hot exhaust from the flames upwards. As heat is drawn upwards, colder fresh air is automatically drawn in through the bottom of the appliance to replace it. The cold air mixes with fuel vaporizing in the hot burner, creating clean burning fuel and continuing the natural draft cycle.

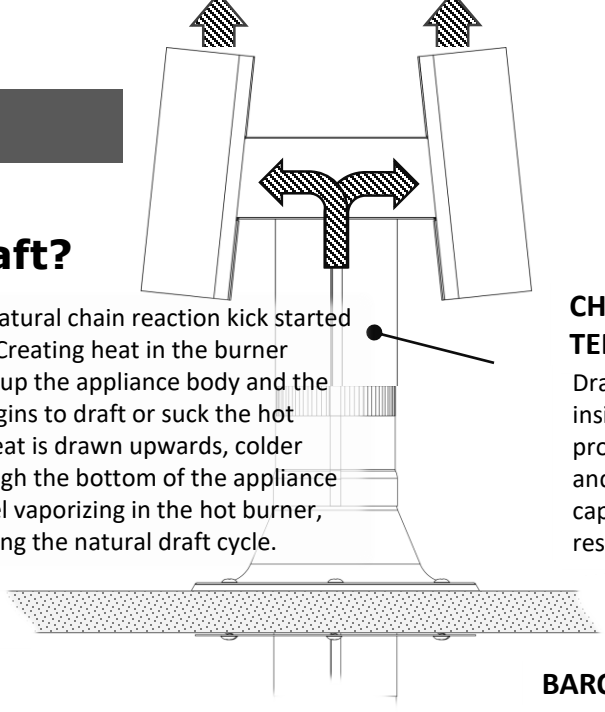

CHIMNEY TERMINATION

Draft created naturally inside the chimney propels exhaust upwards and out of the chimney cap which is designed to resist foul weather

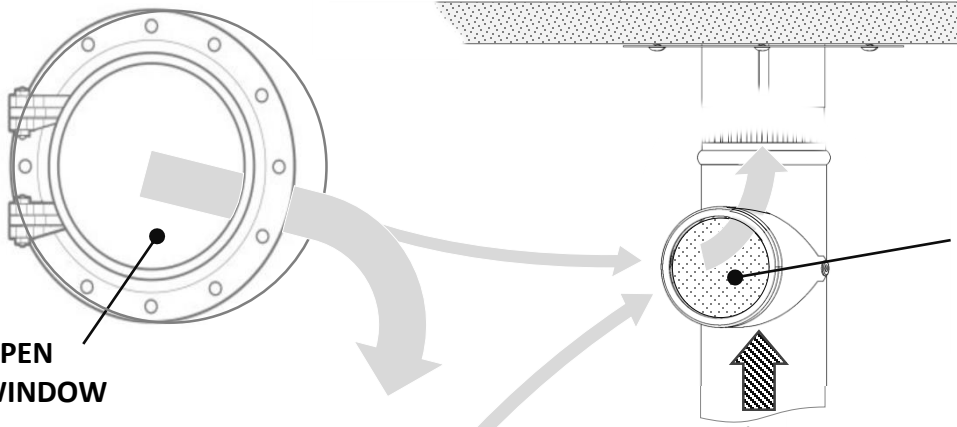

BAROMETRIC DAMPER

If you have a lean burn, Reducing air to the burner can be accomplished by adjusting the counterweight on the barometric damper to sit slightly open. Air will be redirected into the chimney this way, the farther it is open, the more air will bypass the burner.

OPEN WINDOW

A constant, accessible source of fresh air is **mandatory** for every natural draft appliance which is put into operation. An open window will suffice if there's no dedicated vent installed to supply the appliance.

EXHAUST

FLAME QUALITY

The fire itself should sit at and above the ring that sits atop the burner, but not below. Fire inside the burner pot may indicate too much fuel (dark sooty flames) or too little fuel (yellow-blue flames sitting beneath the ring)

AIR/FUEL MIXTURE

Circulating air mixes with the vaporized fuel creating a mixture that will burn cleanly. The amount of air in the air fuel mixture can be increased with the draft assist fan, or decreased using the barometric damper.

PERMANENT VENT

A permanently open fresh air vent is the best way to support the appliance. An open source of fresh air is a **mandatory** part of every natural draft appliance install.

VAPORIZING FUEL

Fuel should be vaporizing as it enters the burner. The burner must be both HOT and CLEAN in order to make this happen. In a burner that is not hot enough, liquid fuel will burn unbalanced and sooty.

NEGATIVE PRESSURE

The appliance cannot be supplied with interior air only. Fresh air from outside must be accessible. Running the appliance with inside air only will create negative pressure causing the cabin to fill with exhaust.

OUTSIDE AIR

Interior air

FIG 10

INTERNAL BURNER COMPONENTS

6-inch Burner Components

COMPATIBLE WITH ALL DICKINSON HEATER MODELS

FIG 11

A.



Low sulfur baffle

A. Low Sulfur Baffle (LSB)
#03-090
The purpose of the low sulfur baffle is to reflect rising heat back onto the superheater keeping it hotter than it would otherwise remain.

B.

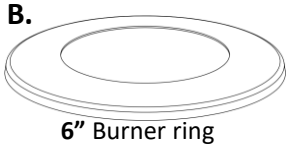

6” Burner ring

B. Burner Ring
#03-040
The burner ring narrows the path of the fuel vaporized at the bottom of the hot burner, concentrating the fumes and mixing them with air for balanced combustion.

C.

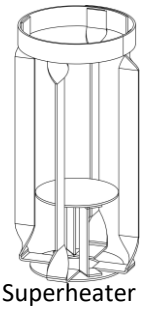

Superheater

Superheater
#03-060
The superheater stands on the bottom of the burner and protrudes up into the flames above the burner ring. Its purpose is to transmit heat to the bottom of the burner, keeping it hot in order to vaporize fuel.

FIG 12

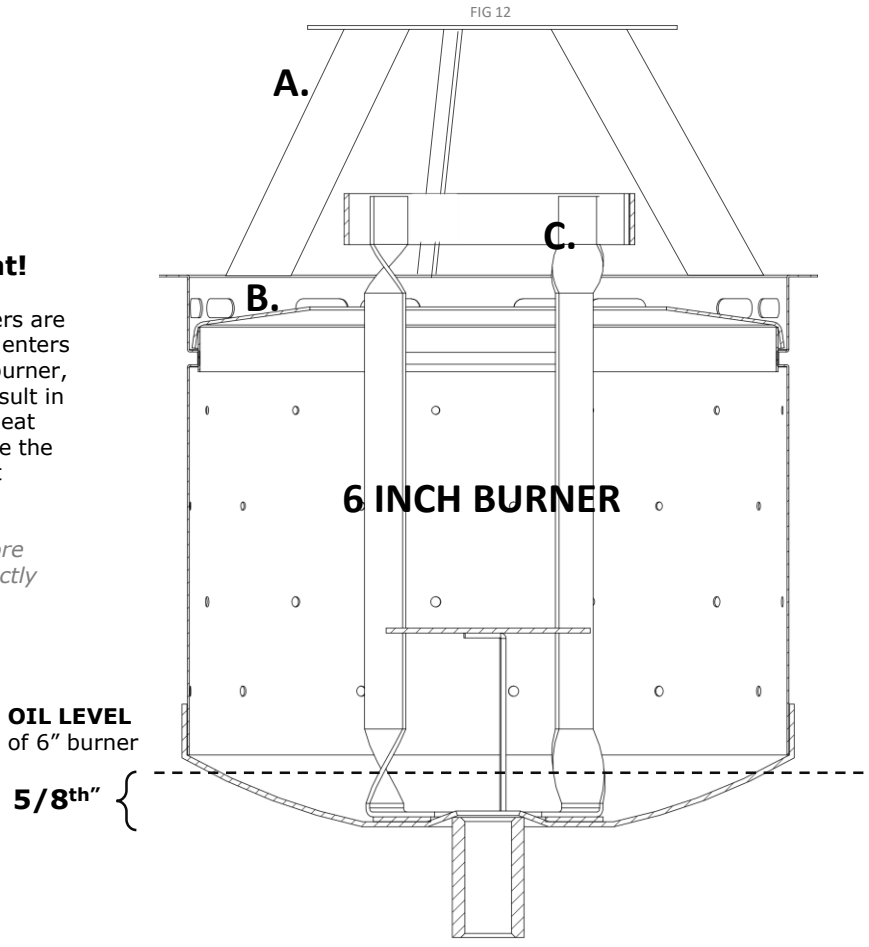

It’s all about heat!

The natural draft burners are a bowl, into which fuel enters from below. In a cold burner, lighting this fuel will result in a dirty, sooty oil fire. Heat must accumulate before the burner is ready to start vaporizing fuel.

See page 35-37 for more details on how to correctly light the appliance.

Priming the burner

To get a burner hot, some priming fuel must be burned. Filling the bottom of the burner, lighting the puddle of oil and letting it burn until almost consumed will introduce enough heat to start vaporizing fuel.

See pages 38-39 for more details on tips to help balance combustion.

OIL METERING VALVE

The importance of the oil level

A natural draft diesel appliance relies on an uninterrupted flow of fuel to keep burning and not extinguish.

The amount of fuel it receives is carefully pre determined by the settings and flow allowance of the metering valve (fig 14)

The job of the metering valve is to keep the oil inside at a steady level. The burner relies on the consistency of the valve's oil level to make sure it is receiving the correct amount of fuel (fig 13)

If the valve hasn't been recently serviced, you may see an inconsistent oil level that may cause flare ups, extinguishing or soot.

Keeping the needle & seat of the metering valve clean is the most important maintenance step you can perform to keep a natural draft diesel appliance running cleanly.

See page 43 for instructions on how to keep the metering valve clean

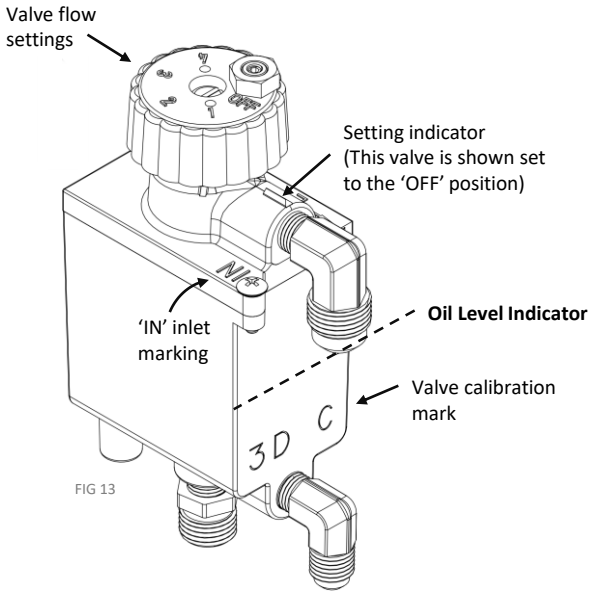

FIG 13

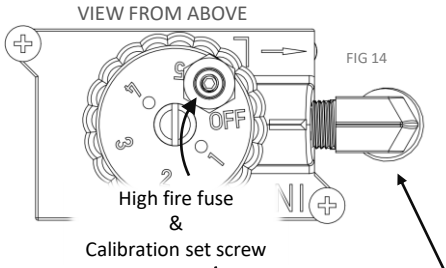

FIG 14

FIG 15

3. INSTALLATION GUIDE

INSTALLATION WARNINGS

Closely following the installation rules and requirements in this manual can protect you and others from potential hazards resulting from improper install. To avoid the risks an improper install presents, please pay especially close attention to these requirements before proceeding with an installation.

Installing a natural draft diesel appliance without adhering to the warnings, requirements and stipulations in this manual can result in damage to property, injury and even death. **Please be aware that Dickinson bear no responsibility for unsatisfactory performance, damage, loss or personal injury resulting from non-conforming product installations that do not meet the requirements in this manual.**



INSTALLATION WARNINGS

Fire hazard

DEATH OR SERIOUS INJURY CAN RESULT FROM FAILURE TO FOLLOW THESE INSTRUCTIONS

- Do not install this appliance in spaces or locations that do not conform to the requirements found in this manual
- Do not burn gasoline or other unapproved fuels in this appliance
- Only burn the fuel that the appliance and its metering valve are rated for, do not mix or otherwise substitute fuels under any circumstances
- Never plug the valve overflow fitting or install the valve overflow line to run uphill in a way that will prevent gravity from draining excess fuel from the valve
- Shut-off the appliance and allow it to safely cool before refueling the vessel
- Never install or operate this appliance without a chimney that meets at least the minimum install requirements
- Never operate this appliance without an open fresh air vent to supply it
- Never shutter the cabin by closing all doors and windows unless the appliance is supplied by its own permanently open fresh air vent
- Never supply fuel to this appliance at a pressure exceeding 3 PSI
- Never supply this appliance from a pressurized fuel tank
- Do not install this appliance in a way that will prevent access to its controls
- Do not install this appliance in such a way that any part of it will be inaccessible for maintenance

WHERE CAN YOU INSTALL THIS APPLIANCE?

Choosing a suitable appliance for your install location is key to getting optimal performance out of it. Assess the appliance's requirements and the install location carefully to make sure it can accommodate all the manufacturers install requirements. Please pay close attention to the **safety clearances, min. and max. chimney lengths, fuel and power hookup** requirements stipulated in this manual. Failure to meet one or more of these install requirements may result in unsatisfactory or unreliable operation of the appliance. **Please note that Dickinson bear no responsibility for unsatisfactory performance damage or loss resulting from non-conforming product installations that do not meet the requirements in this manual.**

HEATING CAPACITY

A natural draft diesel appliance can be used as a source of heat, a source of hot water with a coil installed, and as a cooking appliance if it features an oven or cooking surface. If the appliance is going to be the main or only source of heat, it will be necessary to verify that it provides enough BTU to comfortably heat the space it is intended for.

What is BTU?

BTU stands for British Thermal Unit. 1 BTU is roughly the equivalent of the amount of energy that is released when you light one match. This is roughly enough heat energy to heat 1 pound of water by 1 degree Fahrenheit. BTU is the energy unit most commonly used in the calculating of AC and heating requirements.

Basic BTU calculation

As a general rule of thumb, for every square foot of the space you wish to heat you'll need roughly **20 BTU** of heat energy. This estimate makes a few assumptions however, it assumes that;

- The space has a standard ceiling height of between 7-9 feet
- The space is well insulated with minimal heat loss
- The space is located in a climate zone without extreme temperature lows

Provided that the proposed install location falls within these criteria, the formula below can be used to work out the approximate BTU required to heat a space.

No. of sq ft. x 20 = approximate requirement in BTU

Example: ***800 (sq ft.) x 20 = 16,000 (BTU)***

This calculation tells us that a natural draft diesel appliance with a 6 inch burner, running on high and generating just over 16,000 BTU/hr meets the minimum requirements to serve as a primary heat source for a well insulated, 800 sq ft. space located in a temperate climate.

On the higher capacity end, a natural draft diesel appliance with a 7 inch burner, running on high and generating just over 24,000 BTU/hr meets the minimum requirements to serve as a primary heat source for a well insulated, 1,200 sq ft. space located in a temperate climate.

Other Factors

Several factors need to taken into account when calculating the BTU needs and possible variations for the space you wish to heat. Some of the factors mentioned below are more obvious than others, but all of them have the potential to affect how efficiently and reliably the appliance will be able to heat the space.

Insulation condition: Insulation condition is an assessment of how well insulated a structure or vehicle is. This will depend on the thickness and type of insulation used, it's rated R-value, it's age and condition. An older home will likely have less effective or degraded insulation compared to a newer home insulated with newer, modern materials.

Windows: Windows typically have poor thermal resistance compared to walls even if a space is well insulated. Poorly fitting window frames will also lead to heat loss. Double glazed windows will help retain more heat where applicable. The use of thermal curtain liners can help to reduce heat loss.

Climate: the BTU needed to heat a given space will vary Depending on the climate zone. For example, heating a well insulated space with minimal heat loss in Atlanta, Georgia will require less BTU overall than it will take to heat the same well insulated space if it was located in Anchorage, Alaska.

Number of inhabitants: Every inhabitant (human and animal) sharing the space will dissipate body heat, contributing to a temperature increases. This effect is more noticeable in smaller rather than larger structures.

Dead spots: In order to heat a room, the hot air introduced and the colder air present must be able to flow freely. Dead spots in the room where air movement is reduced by partitions or the placement of furniture can prevent this from happening.

Interior Chimney length: A Dickinson diesel appliance chimney is made of single walled, stainless steel pipe. The single walled pipe radiates more heat that an insulated double walled pipe would, meaning much more of the heat you're able to produce remains in the cabin instead of being lost up the chimney. A greater length of interior chimney means more heat available to heat the space.

ITEMS SPECIFIC TO SAILBOATS

Facing direction?

The appliance should ideally face the bow or stern, especially on a sailboat. Fuel is gravity fed from the metering valve to the burner so if the valve drops below the level of the burner, fuel will not be able to flow uphill to reach it and the flames will extinguish *(fig 16)*

In a beam facing install, there are holes pre-drilled into the left side panel of the appliance so that the metering valve and its mounting bracket can be repositioned *(fig 17)*

Having the fuel line in line with the keel will allow the appliance to operate at up to 15 degrees of heel *(fig 16)*

An appliance with a standard front mounted valve facing bow or stern will continue to supply fuel when the boat heels. This is because the fuel line connecting the metering valve supplying the fuel to the burner is in line with the keel.

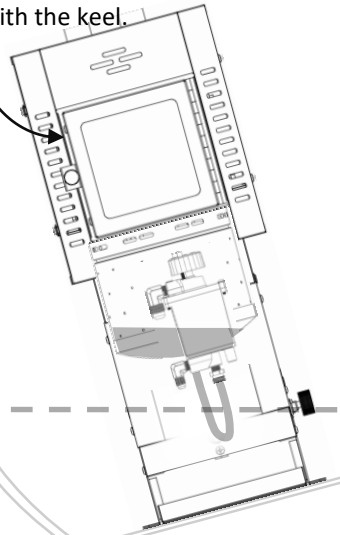

An appliance with a standard front mounted valve facing port or starboard may struggle to supply fuel when the boat heels, or may flood one side. This is because the fuel line connecting the metering valve supplying the fuel to the burner is oriented cross-keel and subject to the movement of the hull.

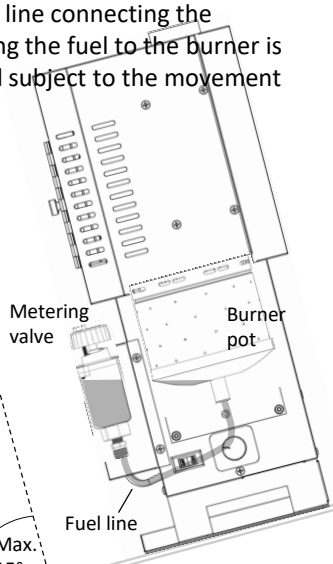

Water line

FIG 16

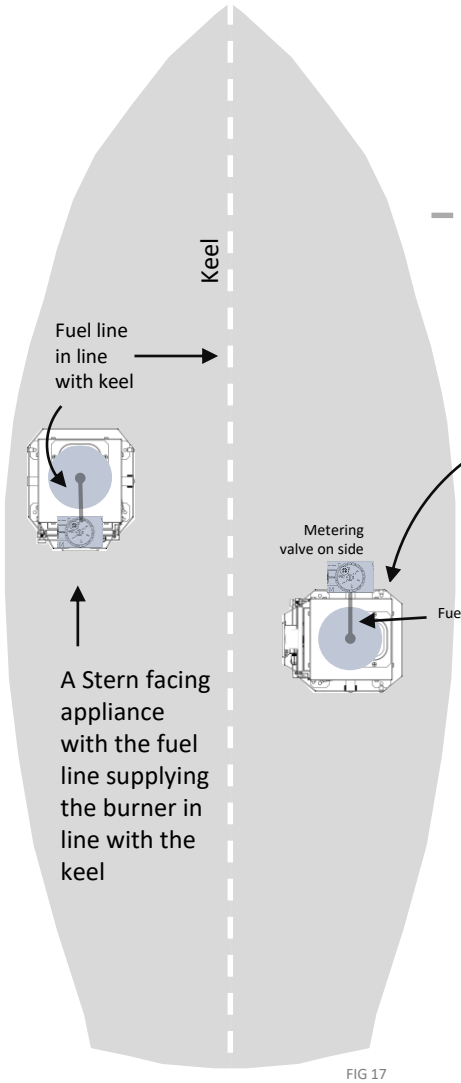

A Stern facing appliance with the fuel line supplying the burner in line with the keel

The metering valve of a port or starboard facing appliance can be mounted to the side of the appliance to bring the fuel line in line with the keel to avoid fuel

Keel

FIG 17

Which chimney cap?

Depending on where the chimney exit is located, our DP cap will be less likely to snag a line and become detached from the chimney. While both caps offer excellent resistance to weather and pressure changes, the H-cap's design does make it less desirable for sailboat installs.

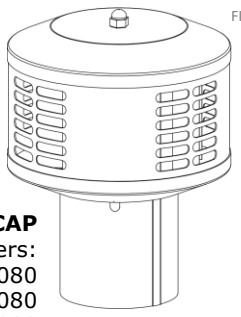

FIG 18

DP-CAP
Part numbers:
3" 16-080
4" 17-080
5" 18-080

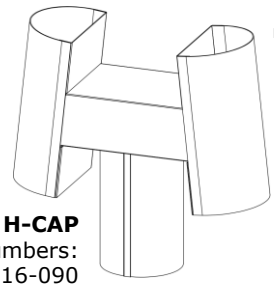

FIG 19

H-CAP
Part numbers:
3" 16-090
4" 17-090
5" 18-090

CHOOSING AN OPTIMAL INSTALL LOCATION

Choosing an unsuitable install location for your appliance may result in unsatisfactory or poor performance without it being defective. The appliance has strict chimney requirements, and its safety clearances must be taken into consideration when choosing where to install it. Below are the most important considerations to keep in mind while selecting the right install location.

Chimney run

Often underestimated, the length and shape of your chimney is ***the most important install consideration that can affect the performance of the appliance!*** Longer, straighter chimneys offer better venting performance than shorter chimneys with bends will. If at all possible, always choose an install location that will allow for the install of 4-6 feet of chimney pipe without the need to introduce elbows. If bends in the chimney are unavoidable, you can achieve bends of 45° without significantly affecting the chimney's draw. Any install locations that won't allow for the min/max recommended length of chimney cannot be considered. Locations that won't allow for a reasonably straight chimney run should not be considered unless unavoidable. Any locations that require a 90 degree chimney bend or wall mounted, horizontal exit cannot be considered.
See pages 20-21

Outside venting

Where the chimney exits will also be critical to the Appliance's operation. Keep in mind that the chimney cap is an exhaust exit. If any adjacent or overhanging structures trap exhaust and cause it to linger, it may result it carbon or soot staining. A chimney cap placed in an updraft may also cause issues with combustion.
See page 24

Safety clearances

The safety clearances for the appliance were determined during extensive safety testing and must be adhered to in all installations for the safety of all property and people in the vicinity of the appliance. If an install location won't allow for these clearances to be observed, a safer alternative location for the appliance which can accommodate the safety clearances must be chosen. Dickinson accept no responsibility for unsatisfactory performance, damage or loss resulting from an unapproved install.
See page 10, fig 7 & 10

Replacing an existing stove or heater?

When installing an appliance it often seems to make the most sense to utilize the location of an old one. While this can certainly be true, the manufacturers installation requirements will differ from one appliance to another. Different appliances will have varying requirements for chimney diameters, heights, safety clearances and other considerations. For this reason, the location of an old appliance may be less than ideal or even unsuitable for the installation of this one. If in doubt, please email Dickinson Marine with your questions.
See page 21

Heating Capacity

Determining how big of a space the appliance will be able to comfortably keep warm is very important when choosing where to install it. In cases where the appliance is installed in a space beyond its capacity to heat, in a poorly insulated room or in a location subjected to very low outside temperatures, it may fail to provide enough heat. This does not mean the appliance is defective. In order to operate as expected it must be determined that the appliance is suitable for the space intended in advance of installing it.
See page 15

Children & pets

All surfaces of a Natural draft Dickinson Diesel appliances become hot while in operation. Utmost care must be taken to make sure vulnerable individuals who may be in the vicinity of the appliance cannot come into contact with it accidentally or on purpose. A folding fireplace screen or other barrier can be can be erected a safe distance in front of the appliance for protection. Children and at risk individuals should never be allowed to remain in the vicinity of the appliance unsupervised while in operation, and must never be allowed to operate the appliance. Only persons familiar with the appliance and the contents of this instruction manual may be allowed to operate the appliance.

INSTALL CHECKLIST

There is a lot to consider when installing a Natural Draft Diesel Appliance. Some steps should be completed before others, some may be optional while others are recommended for every install. The checklist below will help introduce you to the steps involved.

Visit @dickinsonmarine1932 on YouTube to watch an install demonstration & access other technical support videos.

1. Make sure appliance can sit or be mounted level
Making sure the appliance has a level surface to sit on or attach to will help ensure an even distribution of fuel inside the burner.

2. Measure & plan chimney
Map out the chimney run carefully in order to ensure it will fulfill the height requirements, fit into the space available and to ensure you order the correct number of parts.

3. Check the Safety Clearances around the appliance.
Each appliance has its required safety clearances. Review these and verify that they can be accommodated.
See page 10

4. Checklist chimney parts
Determine everything you'll need to build an appropriate chimney before purchasing.

5. Contact us for support
You may reach out to our team if you have concerns or questions about the install. Please note that Dickinson support are not able to approve installs that do not fulfill the install requirements in this manual.

Please email Dickinson with your questions. Make sure to include the appliance model, serial # and pictures of the install;
info@dickinsonmarine.com

6. Cut chimney exit hole
Make sure the exact location where your chimney will exit has been carefully measured out without error before cutting. Ensure that you cut the hole to the correct size with a 1 inch clearance all the way round for the chimney pipe.

7. Attach deck fitting
The deck fitting will seal the exit hole providing an attachment point for chimney pipe both beneath and above deck.

8. Connect fan to power
Use of the 12v draft assist fan is recommended, albeit optional. Connect a 12v power source to the on/off switch & speed control to wire the fan to power (*see page 31, fig 54)*

9. Clean the metering valve before first use
Perform this step for any appliance, new or used. Aged diesel fuel may be gumming up the moving parts of the valve, and cleaning is best done before putting the appliance into operation. This includes brand new factory calibrated valves.
(see page 43, fig 87)

10. Attach the tie down bar
This prevents the appliance from pitching forward or becoming dislodged in rough weather.
(see page 22, fig 28)

11. Assemble the chimney
Dickinson Natural Draft chimney pipe is easy to assemble and doesn't require the use of clamps or sealant *(see page 25, fig 36)*

12. Connect Fuel & overflow lines
Run fuel to the appliance from a gravity feed tank or a pump from the main tanks. Install a downhill flowing overflow line that will empty into a separate container.
(see page 29)

13. Peel all protective plastic from the appliance
Some hardware like screws or bolted on parts may need to be loosened in order to remove trapped traces of protective plastic.

14. Systems Test
Before attempting to light the appliance, make sure fuel will flow adequately and that the fan (if using) is operational and its speed adjustable.

15. Damper positions
A stove comes equipped with a built in damper operated via a brass damper rod. This damper should be open (rod position down) for lighting & normal operation.
Any natural draft diesel or Solid Fuel burning install may have a barometric damper installed on the chimney. This damper should be adjusted closed via it's counterweight for normal operation.

CHIMNEY VARIATIONS

ONLY USE OEM DICKINSON MARINE CHIMNEY COMPONENTS TO VENT A DICKINSON APPLIANCE

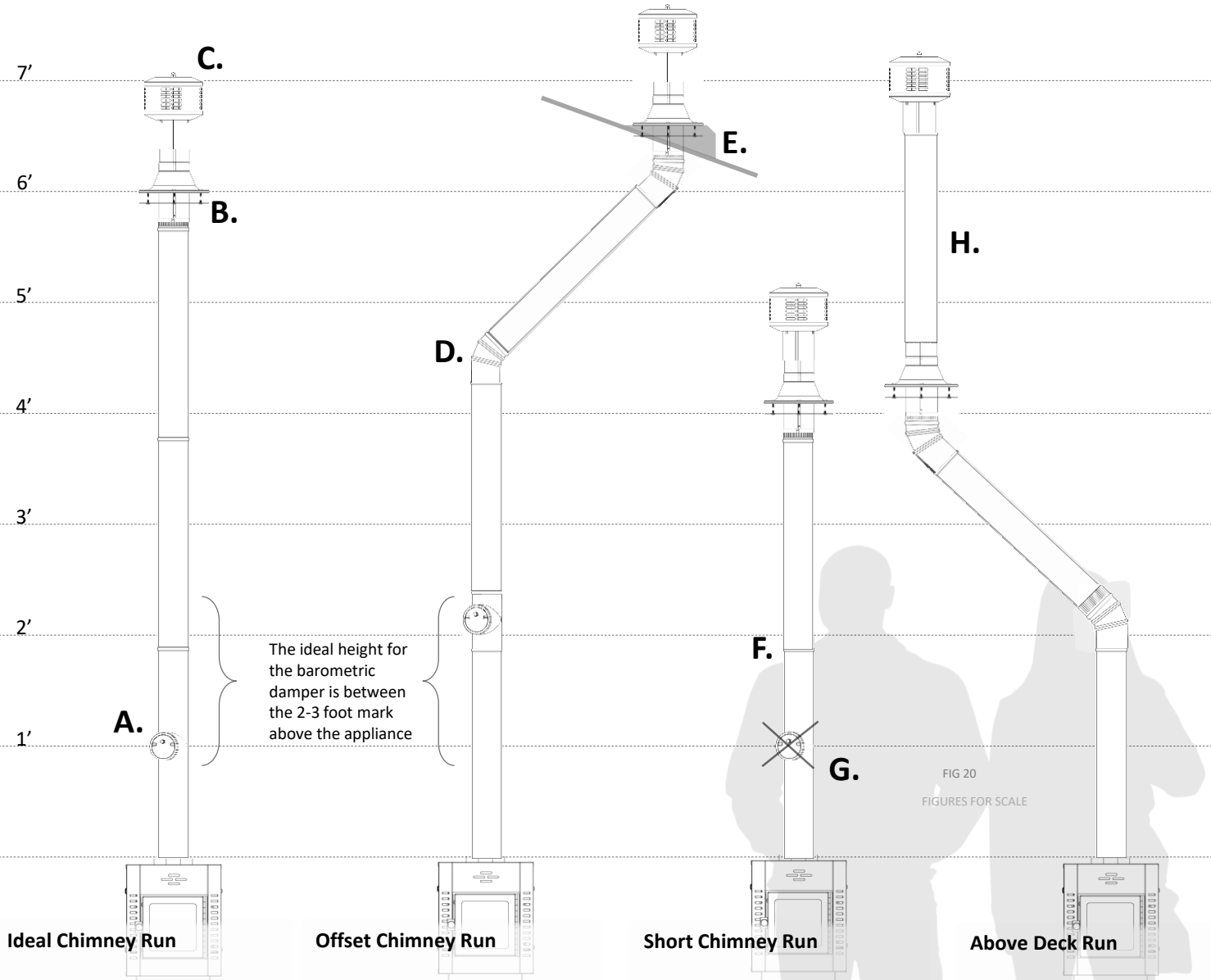

FIG 20

FIGURES FOR SCALE

Ideal Chimney Run

6 feet of straight pipe makes for the ideal chimney run as it will generate the perfect amount of draft to balance your burner at any fuel setting.
A barometric damper **(A)** is a useful addition to a 6 foot chimney stack. Opening the damper will slightly reduce the draft generated and draw less air into the burner.
Terminate the chimney at roof level using the deck fitting **(B)** and your choice of cap **(C)**
(see page 16)

Offset Chimney Run

Offsetting the chimney with 45° elbows **(D)** may be necessary in some installs. Elbows must be positioned as high up on the stack as possible to avoid a reduction in draft. The chimney should run straight from the appliance as high as it will go.
On pitched roofs what’s called a leveling block **(E)** may be used to mount a deck fitting flush.

Short Chimney Run

The shortest chimney that will still generate enough draft to support the appliance is a minimum of 4 feet in height **(F)**
A short chimney will not generate as much draft as an ideal 6-foot run will, so it is beneficial to make a shorter chimney straight without elbows.
A shorter chimney will cause less air to be drawn into the appliance overall, so a barometric damper to control this is not as useful as it would be on a longer chimney **(G)**

Above Deck Run

In many cases it may not be possible to accommodate the full length of chimney required inside the cabin.
In such cases the final section of chimney can be installed above deck. **(H)**
The deck fitting can be positioned lower down on the chimney and the cap attached to terminate its highest length.

UNSUPPORTED CHIMNEY CONFIGURATIONS

8’

Non-conforming installs

Only use Dickinson Marine OEM chimney parts for your install. The use of some pipes, such as aluminum or galvanized ducting **(A)** is considered a safety hazard.

7’

A barometric damper will operate only on a vertically oriented pipe, the damper cannot be mounted on any kind of angle **(B)**

6’

Elbows limit the chimneys ability to develop and maintain a good draft. Most of a chimney’s draft is generated in its first 2-3 feet. Having an elbow mounted within 2-3 feet **(C)** will severely limit the draft you’re able to achieve.

5’

4’

90° bends in the chimney will prevent it from venting adequately **(D)** The 90° bends baffle the exhaust gasses and prevent them from rising and creating a strong draft. Chimney’s over 8 feet in height may generate too much draft and will unbalance combustion inside the burner **(E)** which may prevent it from generating enough heat. A barometric damper placed too high on a chimney **(F)** will not function as intended. For best results place the barometric damper within the first 2 feet of chimney.

Double walled or insulated chimney pipes are not compatible with Dickinson chimney parts **(G)** Altering the chimney diameter along its run is not recommended **(H)** Each appliance is designed to be supported by the recommended chimney size. Altering the chimney diameter can affect its ability to draft unpredictably.

3’

2’

1’

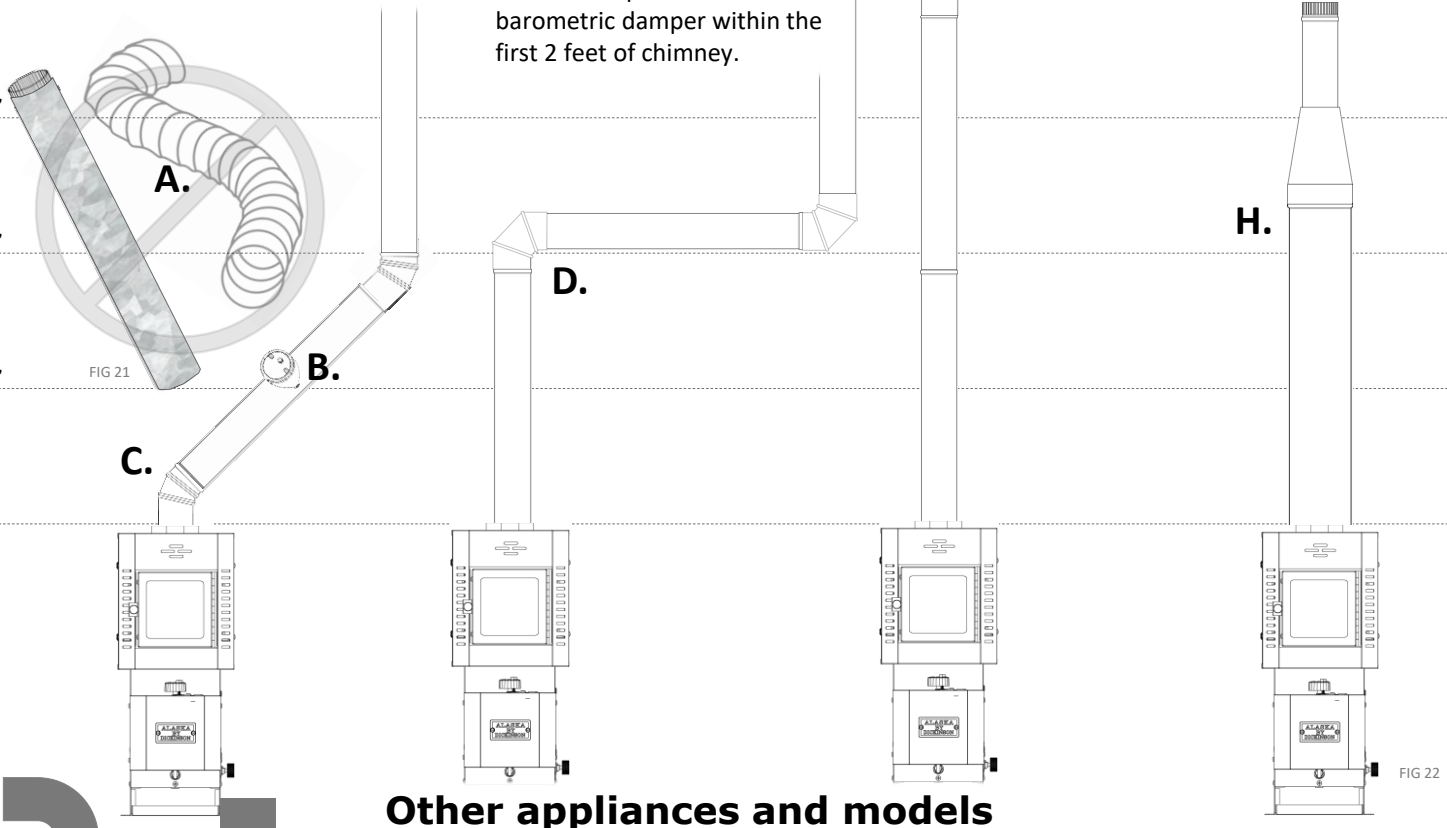

FIG 21

FIG 22

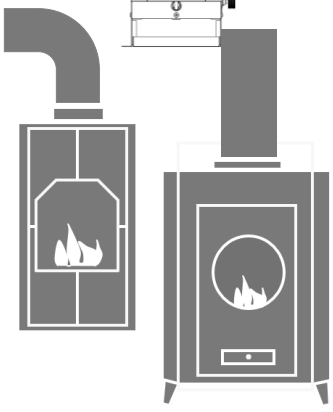

Other appliances and models

It may not be possible to replace a previous model Dickinson appliance or other appliance with this one in the same configuration. This appliance may not support the chimney types, configurations and systems used on other appliances including other Dickinson appliances. The safe clearance requirements, electrical and fuel connection of this appliance may also differ from previously installed appliances.

Where this appliance may be replacing a similar or previous model, due attention must be paid to the warnings and recommendations specific to this appliance included in this manual.

PLANNING THE INSTALL

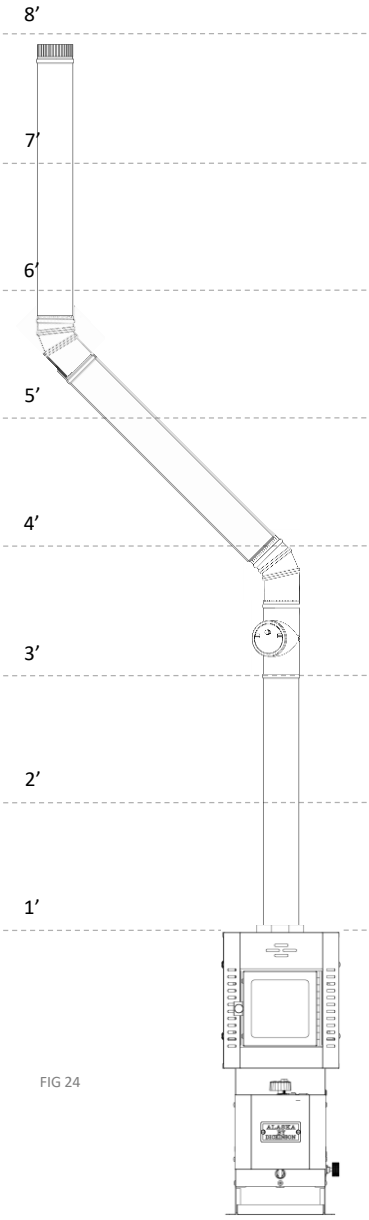

FIG 24

Level foundation

When choosing a surface on which to install the appliance, ensure that It does not sit at an angle or pitched forward or back *(fig 23, below)*

In an appliance that is not level, fuel will pool to one side of the burner and result in partial combustion and carbon rich flames.

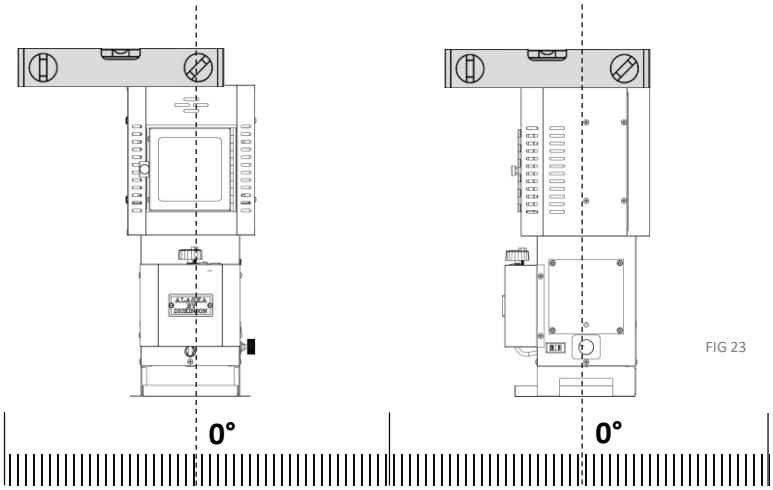

FIG 23

Planning the height & shape of the chimney

The install location must also allow for an unobstructed chimney run of sufficient vertical height (4 feet or higher) and must not incorporate elbows too close to the appliance. Elbows must be located as high up on the chimney run as is possible. A barometric damper should be located within the first 2-3 feet of chimney *(fig 24)*

DECK FITTING (CHARLIE NOBLE) INSTALL

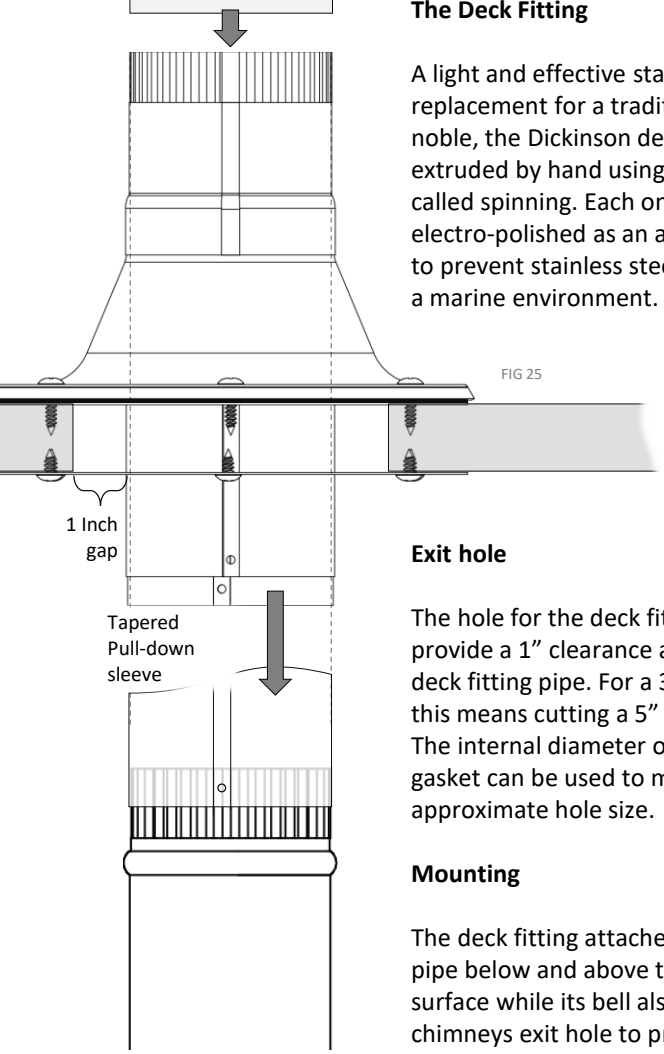

FIG 25

The Deck Fitting

A light and effective stainless steel replacement for a traditional charlie noble, the Dickinson deck fittings are extruded by hand using a process called spinning. Each one is then finely electro-polished as an added measure to prevent stainless steel corrosion in a marine environment.

Exit hole

The hole for the deck fitting must provide a 1" clearance around the deck fitting pipe. For a 3" chimney, this means cutting a 5" hole.
The internal diameter of the rubber gasket can be used to mark the approximate hole size.

Mounting

The deck fitting attaches to chimney pipe below and above the deck surface while its bell also seals the chimneys exit hole to prevent water entry.

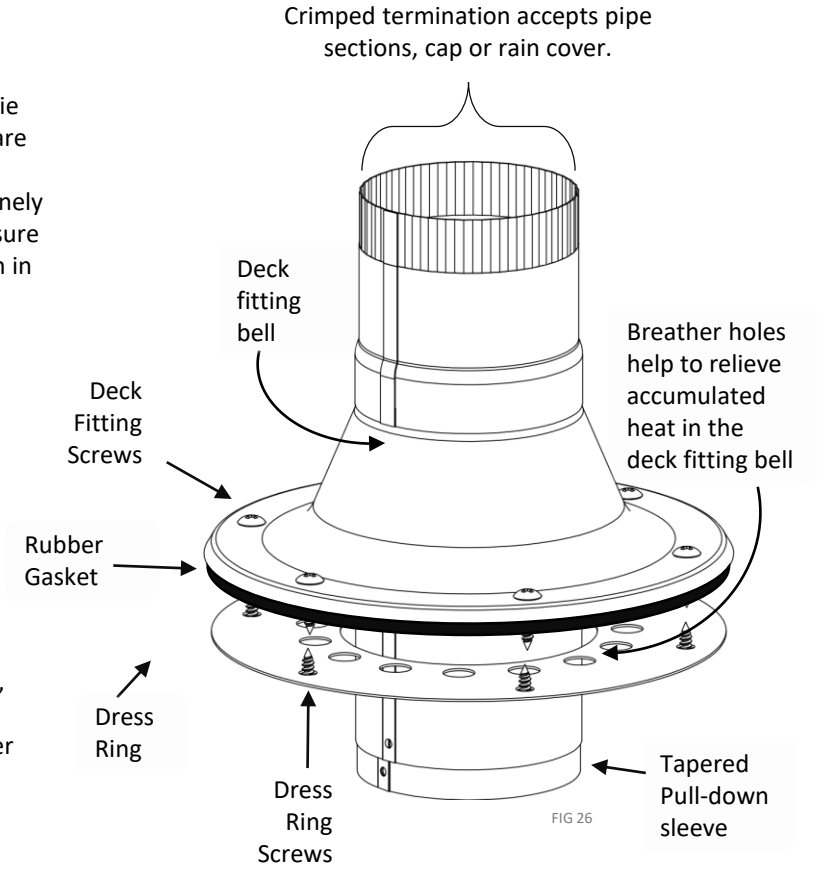

FIG 26

Install deck fitting first

The deck fitting should be installed prior to the construction of the chimney. It will be far easier to attach the chimney to the deck fitting this way. Once The deck fitting is installed, a tapered stainless sleeve pulls down from the deck fitting to make the pipe easy to line up and attach.

Tighten hardware evenly

Fasten down the deck fitting using the screws provided by slowly tightening them in turn to evenly press the bottom of the deck flange into the rubber gasket to create a seal. DO NOT pre-drill holes through the rubber gasket! It may cause it to leak – screw the hardware right through the gasket material.

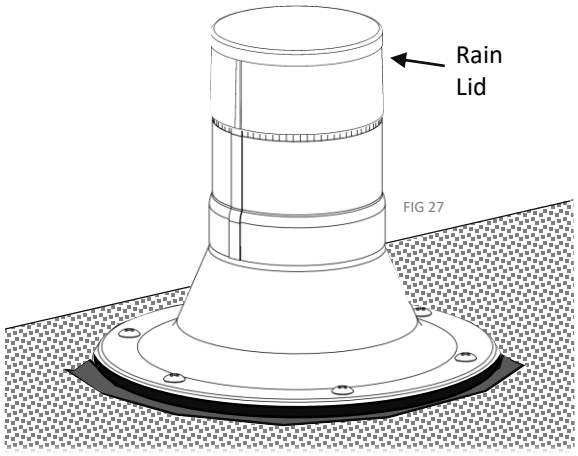

FIG 27

Sealant or no sealant?

Heat and weather resistant sealant is recommended for installs on textured or rough surfaces where the rubber gasket makes incomplete contact with a roof's surface *(fig 27)* On smooth surfaces, a properly installed rubber gasket alone can provide a sufficient seal.

DECK FITTING (CHARLIE NOBLE) INSTALL Cont'd

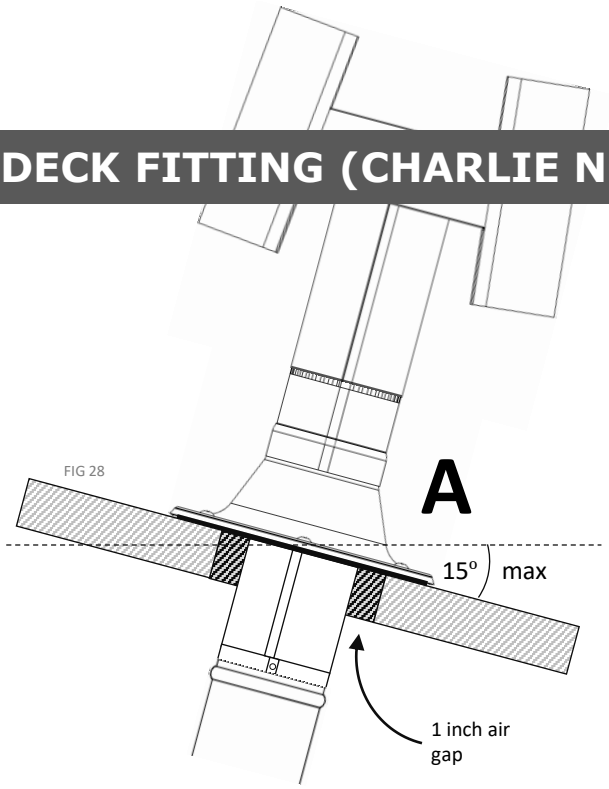

FIG 28

The Dickinson Deck Fitting

The deck fitting can be installed on sloped or angled surfaces if the pitch does not exceed 15° **(A)** If the angle is greater than 15° A leveling block or spacer must be used - *fig 29*

A levelling block or spacer must be shaped or constructed from suitably durable material such as hardwood **(B)** or sheet metal **(C)**
It's construction can be solid or hollow, but a 1 inch gap around all the way around the chimney pipe must be ensured. The chimney pipe itself must not come into direct contact with the block or be too narrowly confined within it.

Levelling Blocks

Must be customized to adequately accommodate the install surface. For this reason it is not possible to order a levelling block from Dickinson.
A Shipwright, carpentry shop or sheet metal fabricator are good places to source a custom levelling block.

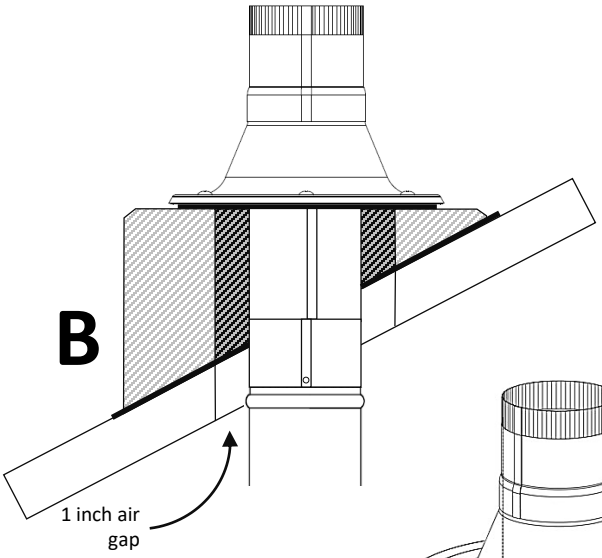

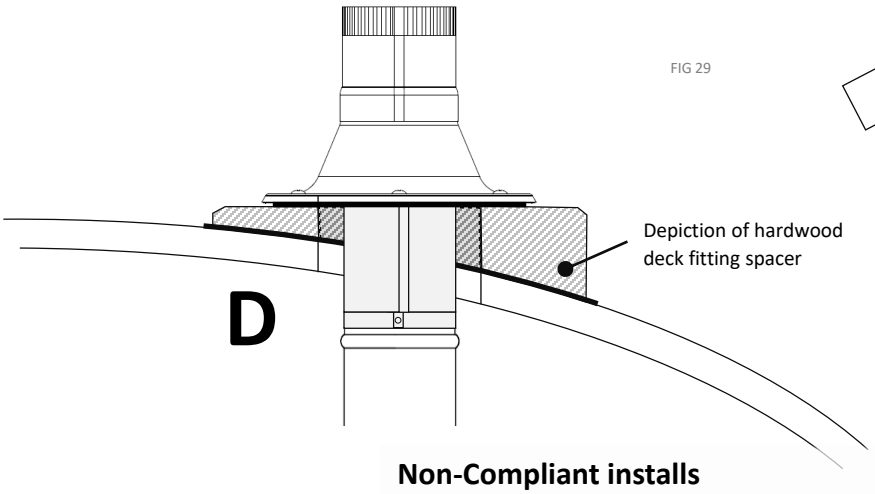

FIG 29

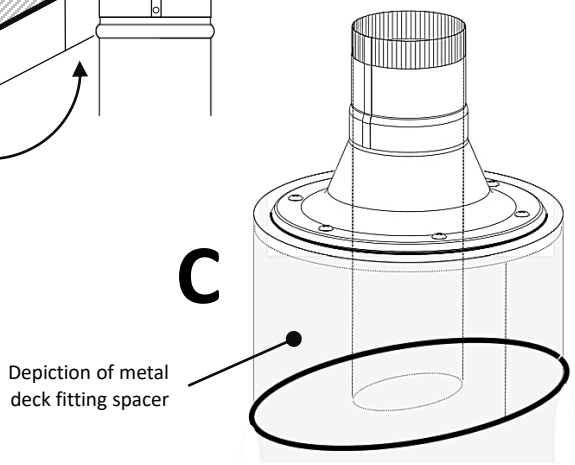

Non-Compliant installs

Installs at angles **(E)** exceeding 15°, vertical installs **(F)** and installs that do not conform to the instructions in this manual are not supported.
Please note that Dickinson bear no responsibility for unsatisfactory performance damage or loss resulting from non-conforming product installations that do not meet the requirements in this manual.

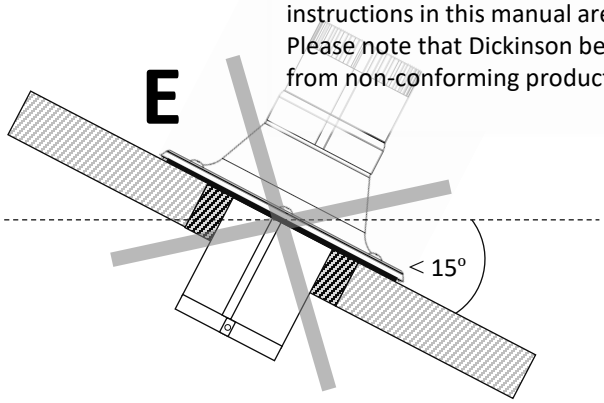

FIG 35

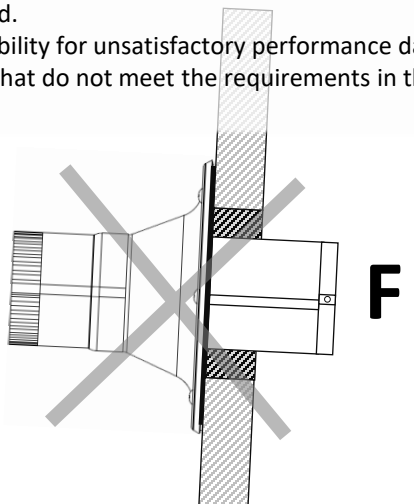

Dickinson Chimney pipes

Dickinson chimney pipes are laser cut, rolled and crimped from high quality 304 stainless steel. Each one fits snuggly into a second pipe, the deck fitting, cap or elbow eliminating the need for tape or additional sealant.

The fit of the pipe sections coupled with the overlaps in the direction of exhaust flow, ensure that the chimney will not leak. The single-walled stainless steel construction means that much of the heat from the exhaust will be absorbed and radiated within the cabin and not lost up the chimney.

Chimney piping is available in 2 foot lengths and 3 different diameters;

3 inch – Newport, Alaska, Antarctic
4 inch – Lofoten
5 inch - Stoves only

Attaching chimney pipe to flue collar

The chimney pipe must be squeezed to form an oval where it connects to the flue collar.

The stainless steel pipe fits around the outside of the flue collar. This applies to all current model Dickinson flue collars both in stainless steel and aluminum.

When mounting this first length of chimney pipe, position one side of the oval over the curve of the collar, then keeping the pipe squeezed firmly, maneuver the rest of the pipe circumference over the collar until it seats all the way down. This will create a tight, reliable joint.

Sealant and tape are not required to assemble the pipe to the flue collar.

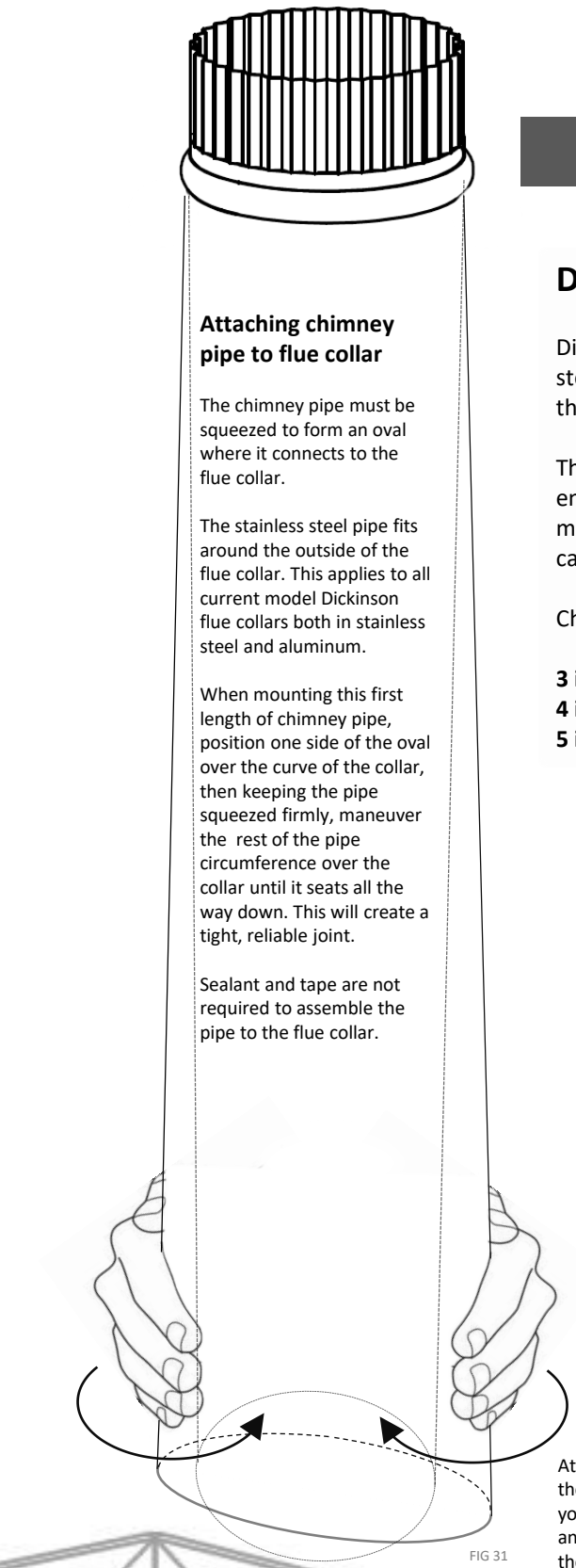

FIG 31

Attaching the pipe to the collar is easiest if you start on one end and then maneuver the rest of the pipe around the whole collar.

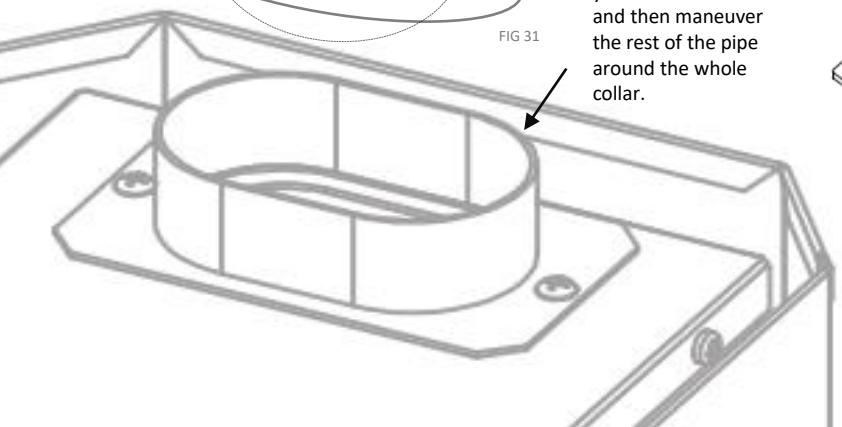

3-INCH COLLAR

A 3-inch Dickinson Flue collar. The 3” flue collars are manufactured from electro-polished stainless steel. Mounting holes are external.

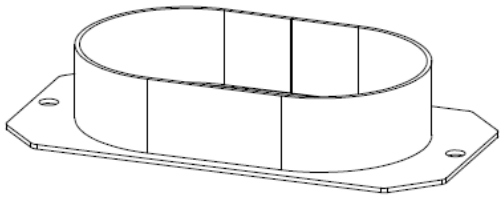

FIG 32

4-INCH COLLAR

A 4-inch Dickinson Flue collar. The 4” flue collars are manufactured from electro-polished stainless steel. Mounting holes are external.

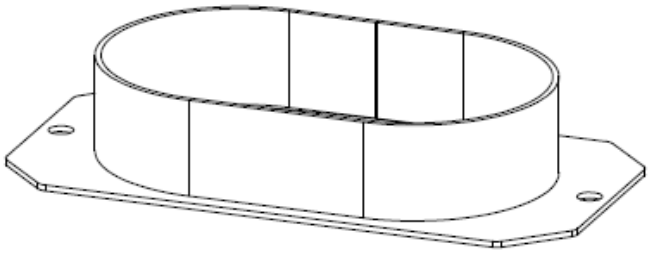

FIG 33

FUEL METERING

THE VALVE:

The SEAT
The seat which the valve needle sits in is the narrowest point of flow for fuel inside the valve. This makes it a possible bottle neck that must not be allowed to become plugged by debris or deposits from contaminated fuel. Cleaning of the seat is performed without the use of solvents or cleaning agents by dry polishing its walls with a cotton swab or similar implement *(see page 43, fig 82)*

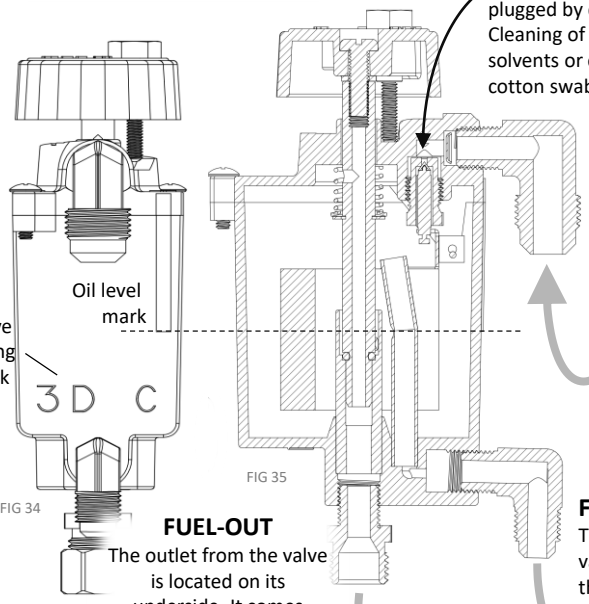

FIG 34

FIG 35

FUEL-IN
The inlet to the valve is located at its top. Connect the incoming fuel hose to its 3/8th inch flare elbow.
Do not use Teflon tape on flared connections.

FUEL-OUT
The outlet from the valve is located on its underside. It comes already connected to a flared copper fuel line which in turn connects to the burner inside the appliance.

FUEL- Overflow
To prevent fuel from backing up inside the valve and leaking from the join at the top of the housing, the overflow tube will convey excess fuel away from the valve.

CAUTION!

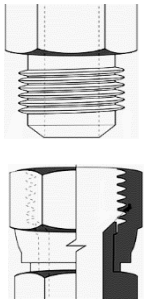

- The fuel inlet & overflow are flared fitting connections.
- NEVER use tape, putty or other sealants on a flared fitting.
- The use of tape or other sealant on threads may cause leaks.

THE VALVE NEEDLE & SEAT

The needle and seat open and close the fuel inlet of the valve, allowing more fuel in when needed, and keeping excess fuel out.

The needle and seat are controlled by the float. The float is buoyant and is suspended in a reservoir of fuel inside the valve, where it rises and falls *(fig 36)* as the oil level fuels the appliance and is replenished

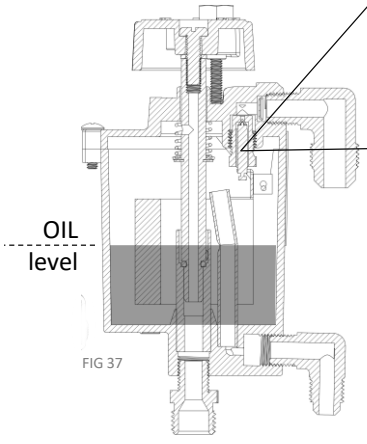

FIG 37

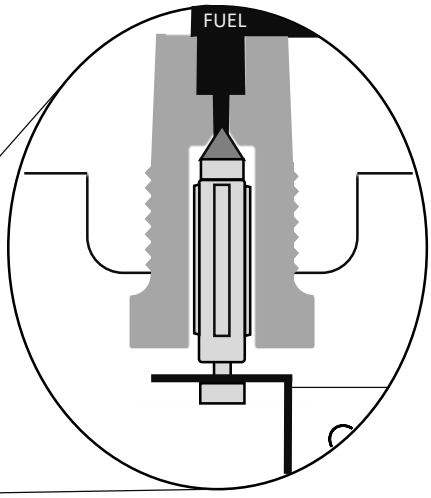

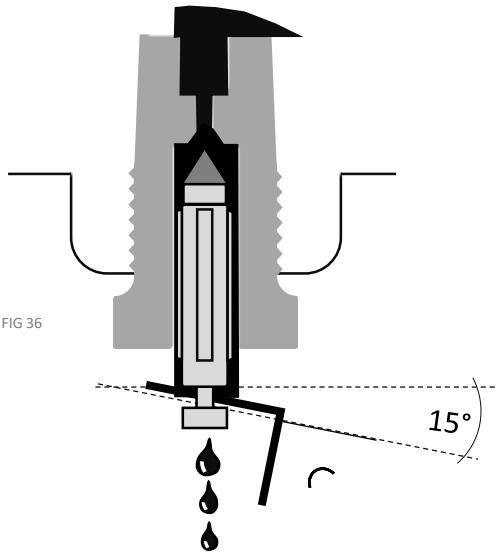

FIG 36

The needle & seat open and close the fuel inlet

When the valve has filled to the oil level *(fig 37)* the float will rise as the reservoir inside the valve fills up.

When the valve is filled to its oil level, the float will rise and push the needle up into the seat.
The rubber tip of the needle plugs the inlet hole to the valve so that no additional fuel can make it's way inside once the valve oil level has been reached.

The Oil level is self regulating

The reservoir inside the valve feeds the burner through a specially machined metering stem.

As fuel drips from the valve to the burner, the oil level will drop slightly.
As the oil level drops, so does the float, pulling the needle down to allow more fuel to trickle in and replenish the reservoir.

FUEL METERING Cont'd

VALVE OPERATION:

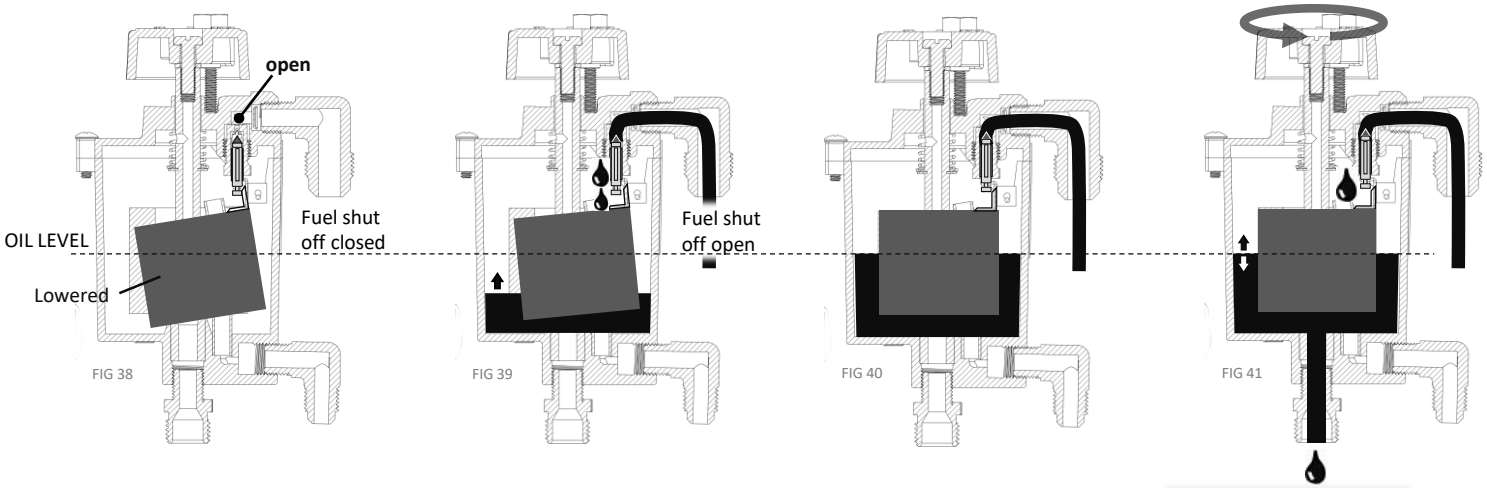

↑ EMPTY

When the valve is empty of fuel the float, having no fuel to float in, drops down.

This lowers the needle inside the seat, fully opening up the fuel inlet.

↑ FILLING

When fuel is allowed to enter the valve, it will trickle in around the lowered needle to fill the reservoir to its oil level.

Once the reservoir has been filled, the valve is ready to meter fuel.

↑ PRIMED

When the reservoir is filled up to the oil level, the float rises and pushes on the needle until the needle's rubber tip seals off the fuel inlet.

Once the valve is filled, more fuel cannot enter the valve until some of the reservoir has been depleted.

↑ METERING FUEL

As the valve drip feeds fuel to the burner, the oil level will maintain itself by allowing an equal amount of fuel to enter.

The valve automatically replaces the amount of fuel gone into the burner by replenishing the reservoir immediately.

VALVE MALFUNCTION:

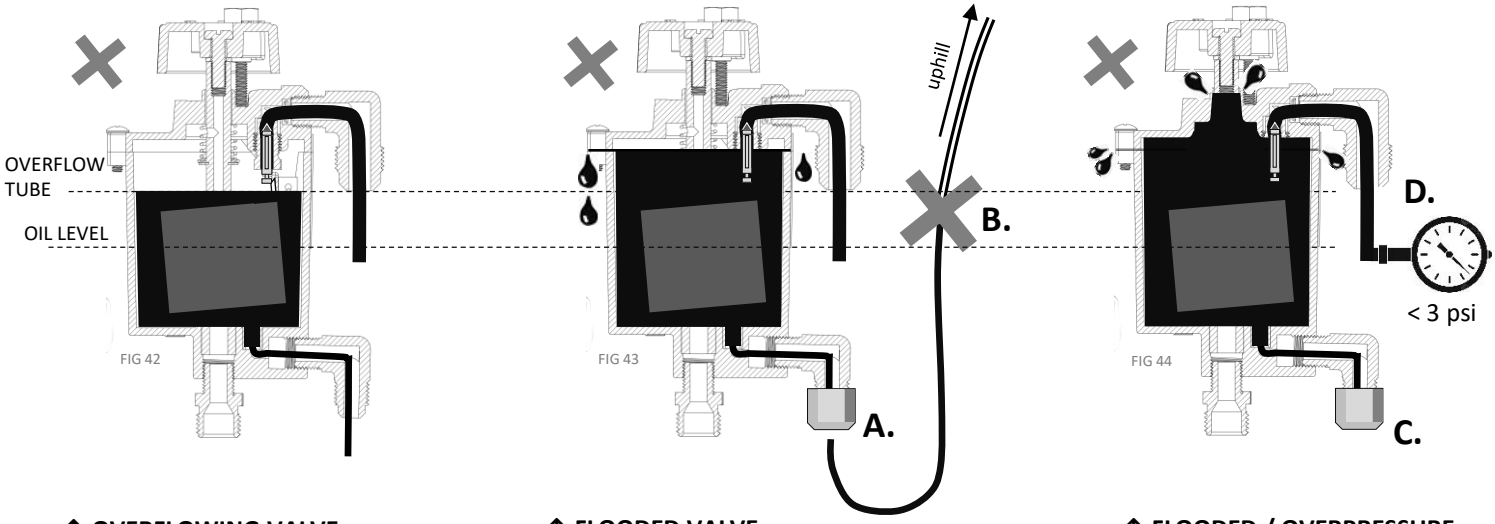

↑ OVERFLOWING VALVE

A valve that has accumulated enough fuel residue to limit the movement of the float may overfill to the level of the overflow tube inside.

This is called an overflow. It will result in increased fuel flow to the burner, as well as excess fuel escaping via the overflow line.

↑ FLOODED VALVE

*If the overflow fitting is blocked **(A)** or directed to run uphill to a point higher than the overflow tube **(B)** excess fuel in an overflowing valve will have no means of escape and will flood the housing.*

A valve in this condition will cause fuel to fill the valve and leak outside the metering valve.

↑ FLOODED / OVERPRESSURE

*If an overflowing valve with a blocked or capped overflow fitting **(C)** is subject to incoming pressures of greater than 3 PSI **(D)** fuel will flood the inside of the valve.*

A valve in this condition will leak fuel from the housing as long as the pump delivering fuel continues to run.

FUEL SUPPLY SYSTEM

To ensure correct operation and your safety, you must follow the following recommendations for connecting and supplying your appliance with fuel.

1. Never use gasoline or unapproved fuels in your appliance

Only use number 2 diesel in a Dickinson appliance. If you have an appliance with a special metering valve rated for number 1 diesel or kerosene you must only run the fuel the valve is rated for. Running unapproved or incorrect fuel types in this appliance is a potential explosion hazard.

See page 26, fig 34, for valve rating markings

2. Cold climates

In colder climates or during colder seasons depending on your location, kerosene or winterized number 1 diesel fuel may be recommended due to their reduced viscosity. These fuels will flow better and resist thickening in cold weather. In consistent cold conditions where fuel must be exposed to cold, substituting a valve with a higher flowrate may also be recommended.

3. Fuel line install

We recommend a flared line connection for fuel lines you connect to the metering valve. For this reason the metering valve is supplied with flared fittings and nuts.

Use 3/8" copper refrigeration tubing for the inlet and ¼" copper refrigeration tubing for the overflow line. Flare the ends of these using a flaring tool to allow them to seal against the fittings provided.

We recommend copper or aluminium tubing of the refrigeration type or rated for fuel delivery for all fuel lines that come within 3 feet of the appliance. Farther than 3 feet away from the appliance any approved fuel line can be used. Make sure to run all fuel lines as straight as possible to avoid air locks. Thoroughly check every connection for leaks after install, especially in a pump based system.

4. Overflow feature and fitting

The valve is fitted with an overflow tube, the purpose of which is to evacuate excess fuel should it accumulate inside the valve without being passed on to the burner.

While the overflow fitting will emit a few drops of fuel from time to time, especially in rough seas, if you notice fuel dripping steadily from the overflow fitting this is an indication that the valve requires servicing *(see page 43)*

The overflow evacuation line is gravity fed – this means it will not flow uphill from the metering valve. Do not install the overflow line so that it travels upward or in loops. Any loops or air locks in this line may impede fuel flow, so configure the line as straight as possible *(see page 27, fig 43)*

5. Main fuel tank supply

If your appliance is being supplied from a main fuel tank, the overflow line **must return to the main tank.**

When running the overflow line to the main tank, if the vent or fill tube on your main fuel tank is positioned higher than the valve on the appliance, **a manual shut-off must be incorporated into the overflow line** and shut to 'OFF' when refueling. Without a manual shut off in the overflow line, refilling the fuel tank may cause fuel to back up into the overflow line and leak from the metering valve.

Do not use a check valve for this purpose.

See page 29, fig 46

6. Fuel filter and manual shut off

Fuel must be filtered before it reaches a fuel pump or the metering valve to prevent dirt & debris from plugging check valves in the pump or the needle & seat of the valve.

There must also be a manual shut-off between the tank and the valve to relieve pressure on the valve needle when the appliance is not in use. When not in use, relying on the valve alone to shut off fuel flow may cause wear to its mechanism.

See page 29

7. Fuel pump use

When using a low pressure fuel pump to deliver fuel, the line delivering fuel from the tank to the pump must be connected as close to the fuel tank as possible and must not be supplied from the engine supply line or from the engine fuel filter.

Use a check valve in the appliance fuel line to prevent the engine from drawing and consuming fuel intended for the appliance.

8. Gravity vs. fuel pump?

There are many factors that need to be taken into account when configuring the fuel supply system. After taking into account any factors that might prevent a particular set-up from conforming to the guidelines and stipulations in these instructions, other considerations include;

- Gravity feed is silent, whereas a cycling pump emits occasional noise
- Gravity feed requires a day tank positioned higher than the appliance whereas a pump can draw fuel from an existing fuel source.
- Gravity feed systems have no moving parts to fail whereas a mechanical pump requires a power source and will eventually require servicing.
- Using a pump to draw fuel from an existing tank requires a check valve in the supply line as well as a shut-off valve on the overflow line.

See page 29

FUEL FILTERS & MANUAL SHUT-OFFS

Fuel must be filtered before it reaches a fuel pump or the metering valve to prevent dirt & debris from plugging check valves in the pump or the needle & seat of the valve.

There must also be a manual shut-off between the tank and the valve to relieve pressure on the valve needle when the appliance is not in use. When not in use, relying on the valve alone to shut off fuel flow may cause wear to its mechanism.



GRAVITY SUPPLY

When using a gravity tank, there must be **a minimum head of 12"** above the oil level mark on the side of the valve to operate correctly (*see page 25*)

The gravity feed tank **must be vented** and all fuel lines must be as straight as possible to avoid air locks that will impede the flow of fuel.

Do not use a pressurized fuel tank.

The oil metering valve is rated for an incoming fuel pressure of 3 PSI. If the incoming pressure exceeds 4 PSI, a pressure regulator will need to be installed in line to reduce it.

If you're using a tank a capacity larger than 30 gal or located more than 7 feet above the appliance valve height, a pressure regulator will be required as well. *(page 30, fig 48)*

PARTS

In line Pressure regulator part number:	#20-003
Fuel filter & manual shut-off Part number	#20-010

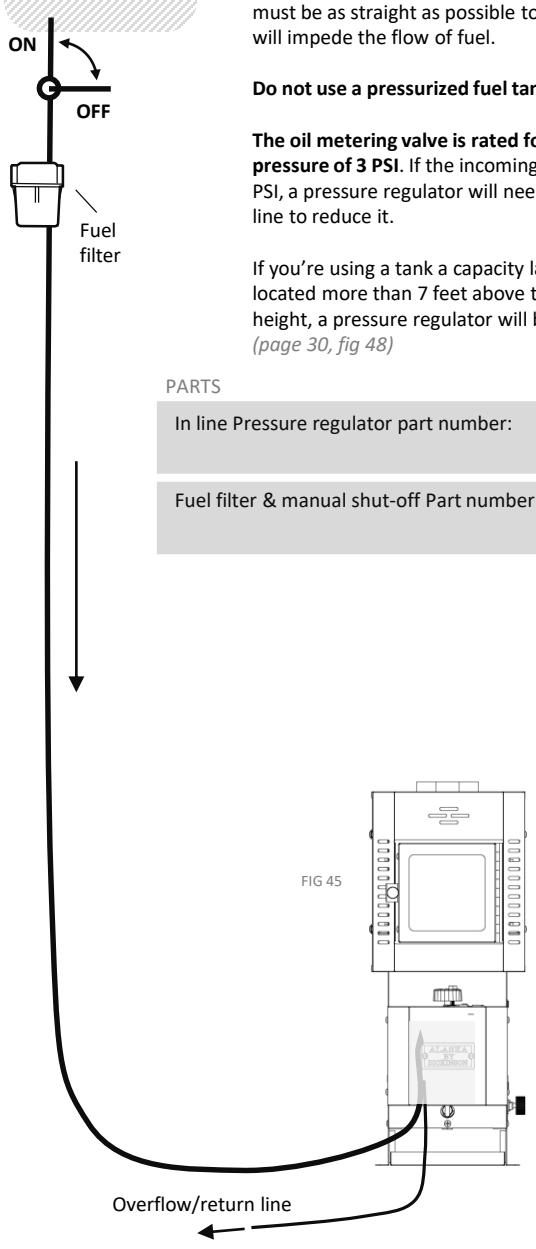

FIG 45

PUMP SUPPLY

When using a low pressure fuel pump to deliver fuel from a main fuel tank, the fuel line must connect as close to the fuel tank as possible and not draw from the engine fuel supply or engine filter. **Use a check valve in the fuel line to prevent the engine drawing fuel away from the appliance**.

When installing a Walbro fuel pump supplied by Dickinson, **the best results will be obtained by locating the pump somewhere it will 'pull' fuel upwards** rather than placing it at the tank to 'push' fuel upwards.

We carry both standard and heavy duty fuel pumps. In a mild climate where a fuel run equates to less than a 4 foot vertical rise or 15 feet of horizontal travel, the standard pump should be sufficient. In a colder climate, or where the run requires more than a 4 foot rise or 15 feet of horizontal travel, a heavy duty pump is recommended.

The maximum pressure of the heavy duty pump can exceed the 3 PSI inlet pressure the valve is rated for, and so it is equipped with an adjustable pressure regulator to reduce it *(page 30, fig 48)*

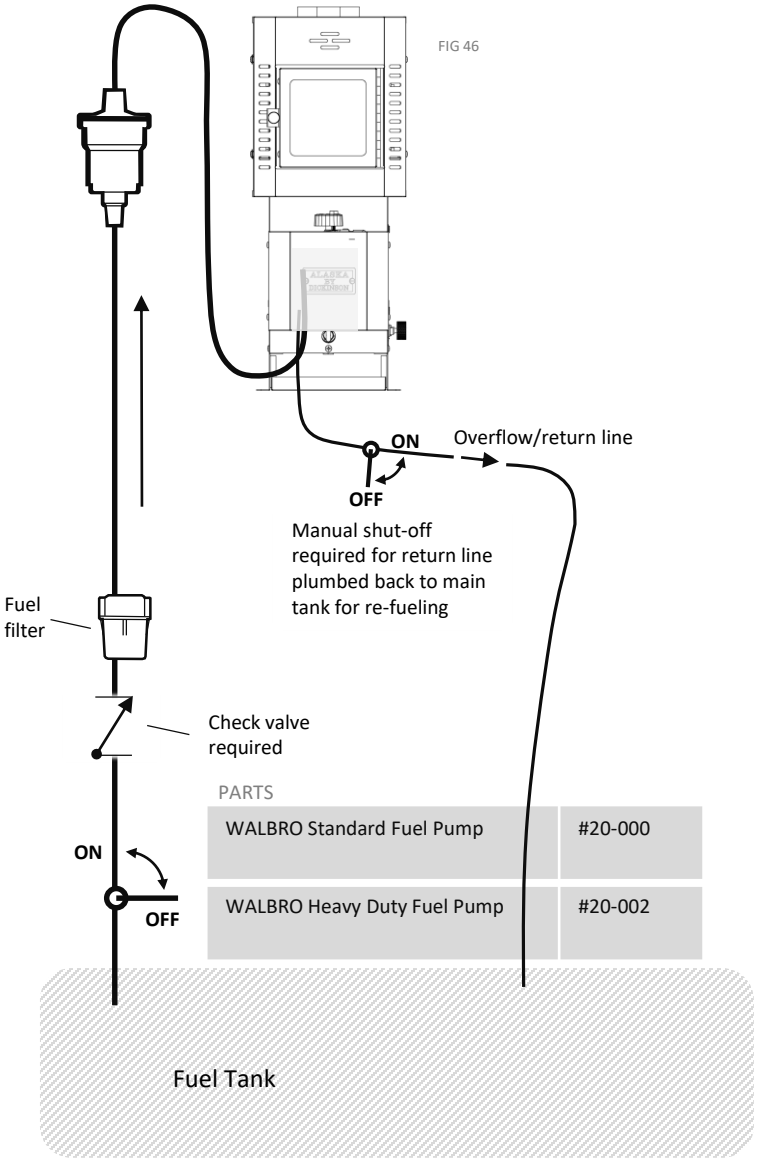

FIG 46

PARTS

WALBRO Standard Fuel Pump	#20-000
WALBRO Heavy Duty Fuel Pump	#20-002

PUMP INSTALLATION

Orientation

The pump is best installed oriented with its outlet pointing upwards. If installing the pump upright is not possible, the pump can be installed on its side. Please note that a pump installed on its side may suffer from increased wear over time and can result in limited pressure.

In order to get fuel flowing through the pump, it will need to be primed before its first use. Once the pump has been primed, its check valves will prevent fuel from being able to flow the wrong way keeping it primed for use.

If the pump loses its prime, one or more of the 3 check valves may require cleaning.
See page 44 for pump maintenance

Install the pump in a well ventilated area where it will not be subject to excessive heat or exhaust.

This pump is not to be used for gasoline.

Priming the pump

To prime the fuel pump, disconnect the fuel line where it connects to the metering valve on the appliance. Direct the open fuel line into a bucket and switch power on to start the pump.

The pump will push out any air that may be trapped in its lines. Until it has rid itself of all air bubbles, the pump may, vibrate, pulse noisily and eject atomized fuel. Once all air has been bled from the lines, the pump will settle down to a steady flow of fuel without vibration or excessive noise.

Once the pump has filled the valve to its oil level and the lines are pressurized, the pump will continue to pulse albeit less frequently. When the appliance is running, the pump will continue to cycle to maintain pressure in the lines as the burner uses up fuel.

Using a rubber backing between the pump and the surface it is attached to will help to reduce the noise it makes each time it cycles.

Pressure regulator

If you are using a fuel pump equipped with a fuel pressure regulator, set this to its lowest setting. You are looking for the lowest setting that will offer a consistent, pulsing flow of fuel. If you are not getting a consistent flow, adjust the regulator setting one increment higher and observe the flow. Only adjust the pressure regulator higher to achieve consistent flow, but avoid setting the pressure regulator any higher than necessary.

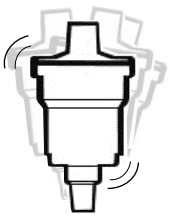

Vibrating, noisy & chattering pumps

If the pump continues to show signs of air in the fuel lines (Vibrating, chattering or getting hot) this indicates that there is a leak present allowing air in. A leak indicated in this manner will be found between the pump and the source of its fuel. Even a leak too small to drip fuel can allow enough air in to prevent the pump from priming. Investigate leaks and tighten all connections methodically in order to trace the source of a pressure side leak.

Wiring

We recommend wiring the pump into a 12v control circuit with a 5 amp fuse so that power to the pump can be switched off when it is not in use.

Connect the black ground wire on the pump to the negative terminal of your power source.

FIG 47

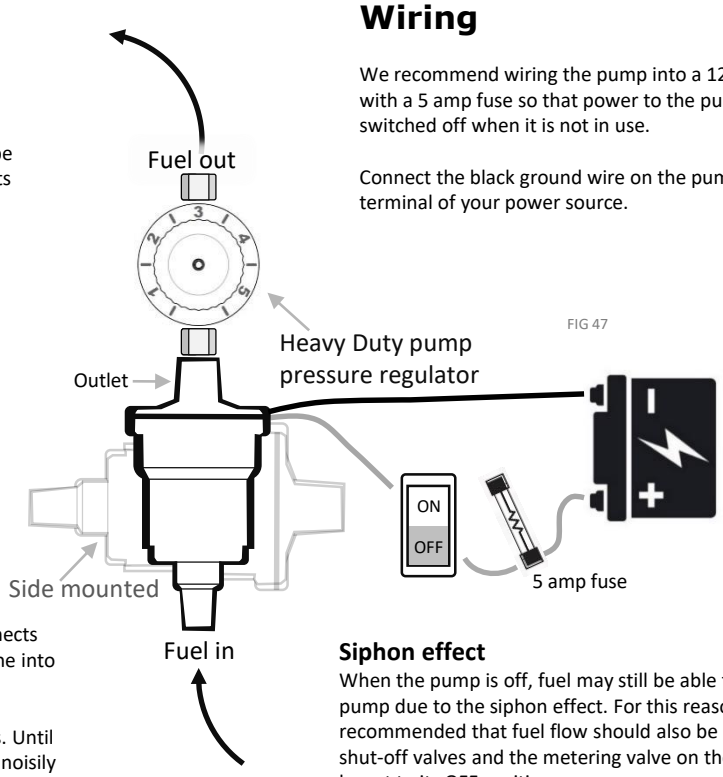

Siphon effect

When the pump is off, fuel may still be able to flow through the pump due to the siphon effect. For this reason, it is recommended that fuel flow should also be prevented using the shut-off valves and the metering valve on the appliance should be set to its OFF position.

FIG 48

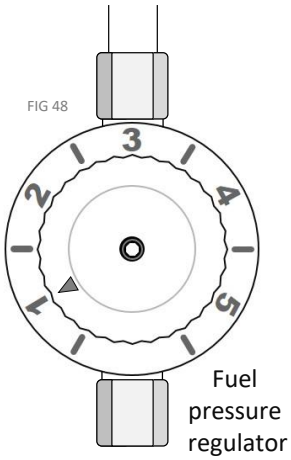

Regulator settings

The numbered 1-5 settings on the pressure regulator do not represent a specific unit of pressure. The settings are merely indicative of how 'open' the regulator is. Setting 1 represents the lowest pressure setting while setting 5 indicates the highest.

Calibrate the regulator

If the pressure regulator will not allow fuel through, it may be necessary to adjust or calibrate it.

In the center of the regulator, a hole opens to a set screw which can be used to increase or decrease the pressure available across the regulators positions. Use an allen key (5/64th" / 2mm) to turn the set screw in small increments clockwise to increase pressure, and counter-clockwise to decrease it.

DRAFT ASSIST FAN WIRING

This appliance is equipped with a 12v draft assist fan. While running the fan is not required in order to light and operate the appliance, it is strongly recommended as it will offer you a greater degree of control over the quality of combustion in the burner.

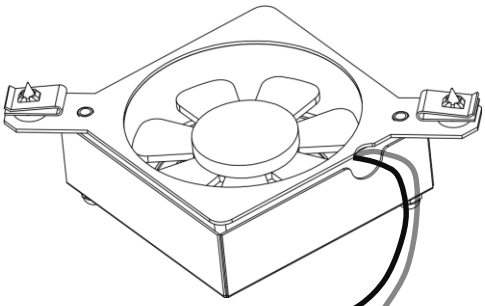

FIG 49

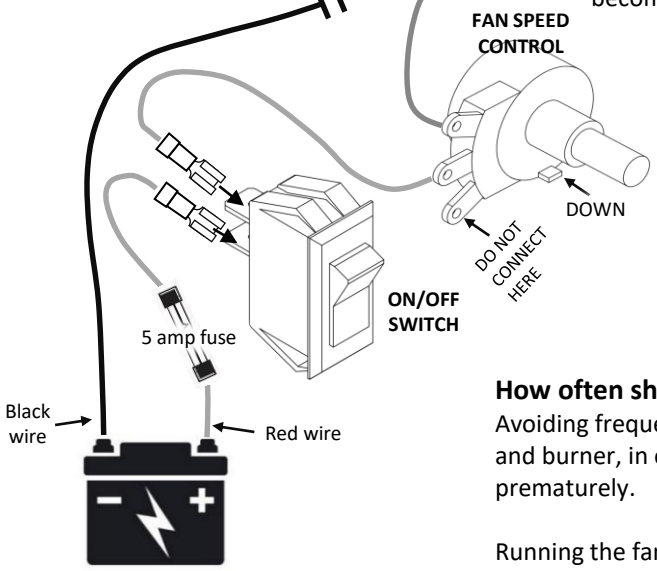

When to use the draft assist fan

Use the fan during light-up, for higher fuel settings or if conditions are unusually windy.

Draft generated within the chimney is responsible for drawing fresh air into the burner where it feeds the flames. During the lighting procedure while heat & draft are beginning to develop in the burner & chimney, the draft assist fan will provide an adjustable supply of air which will make it easier to balance combustion.

Note: Without a draft assist fan, you must rely on fuel adjustment alone to keep the flames in the burner burning clean (blue to yellow) and reduce fuel if the flames become too rich (orange to red)

When to turn off the fan

Once the appliance has reached operating temperature, when set to fuel settings below #3 the draft assist fan can typically be shut-off.
When set to fuel settings 4 or 5, the extra assistance from the draft assist fan may still be needed.

For installs set up with the minimum permissible chimney height, or in installs where flue elbows are present, the draft assist fan may be required to balance lower fuel settings also.

How often should the fan be used?

Avoiding frequent use of the fan by running the appliance in a balanced way with a clean flame and burner, in order to encourage a strong draft, will prevent the fan motor from burning out prematurely.

Running the fan continuously may also solidify soot deposited within the burn chamber into hard carbon which is more difficult to remove. Hard carbon deposits are also more likely to plug the air holes in the burner **(A)** and prevent it from getting the air it needs.

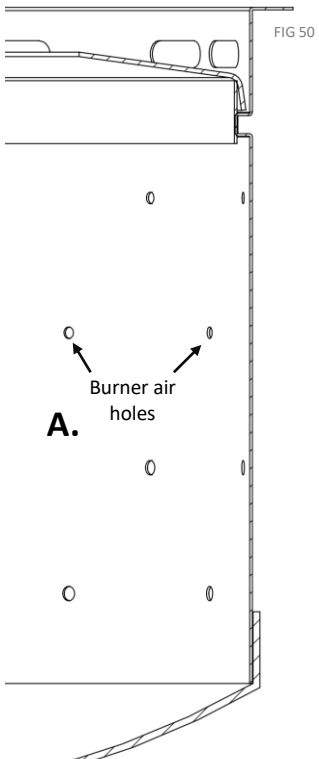

FIG 50

When to avoid turning on the fan?

If the flames look balanced (blue to yellow in color) but won't rise above the burner ring, these things combined indicate an unbalanced fuel-air ratio with too much air available.

Older models

An older appliance may be equipped with a different fan and motor from the current models. On some older models, the fan will need to be adjusted to a higher speed to make it spin. Once the fan is running, the speed can be reduced to the desired setting.

Install notes:

Use 18 gauge wire for all connections.

Wherever possible, ensure a weatherproof wire connection such as a soldered or push-on connection.

On fan assemblies with a metal housing or bracket, place any rubber bushings or washers provided so that they sit in between the fan assembly and the main body of the appliance. The purpose of these bushings is to dampen vibrations or sound from the motor from becoming amplified inside the appliance.

HOT WATER COILS

Dickinson Natural Draft Diesel appliances have the option of adding a water coil to supply hot water. Appliances can be purchased with a water coil already installed, or a coil can be retrofitted to an existing appliance.
Dickinson water coils are manufactured from stainless steel and measure 5/8" (outside diameter) they come with compression fittings to which attaching 2-3 feet of copper or other metal pipe is recommended. Farther than 2-3 feet away from the appliance suitable hot water piping can be used instead of metal.
Each water coil is formed differently to fit the appliance they are intended for. The coils come in both 1-turn and 2-turn configurations. The estimated output of a 1-turn coil is 5-10 gallons of water per hour, and 15-20 gallons in the case of a 2 turn. Smaller natural draft heaters and stoves may only be capable of fitting a 1-turn coil *(see page 9 for coil specifications)*

Heating Capacity
It takes approximately 3000 BTU to raise the temperature of 30 gallons of water by 30 degrees. Because much of the BTU produced in the appliance becomes radiant heat which spreads throughout the cabin, it is difficult to estimate in advance the heating capacity of an appliance install with any accuracy.

Pressure Relief
A pressure relief must be installed in the system in order to avoid a dangerous build up of pressure.

Hot Water Tank
If you have a hot water supply tank mounted above the level of the coil, the coil can heat and circulate the water inside it by means of convection only. If the tank is not positioned above the appliance or is far away, a water circulating pump is recommended. The temperature of the water in the system will maintain heat better if it is moving quickly, and for that reason a water circulating pump is recommended for convection installs as well. The temperature of the water achieved and the volume of water moved through the system will also greatly depend on the heat being generated in the appliance itself.

See below for diagrams of coils being used in a radiator system *(fig 51)* and coil use in a potable water system *(fig 52)* If a hot water tank, radiator or other device is being used in conjunction with a hot water coil, follow all manufacturers guidelines for that device. The examples below are for illustrative purposes only and are not meant to depict the best or only way to lay out a hot water system.

Professional advice and support should be sought out for the installation of your hot water system.

Hot water tank install
Example of an installation using a hot water tank to supply hot & cold water for domestic uses such as washing & bathing. In this system the water tank is equipped with a pressure relief. A check valve prevents cold water from entering the hot water storage.

FIG 51

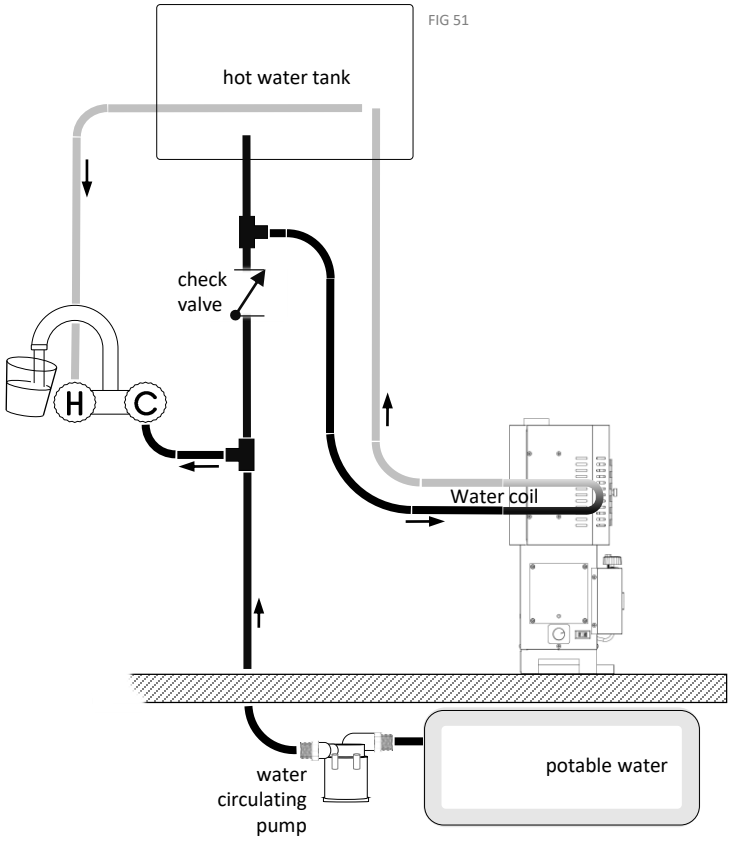

Radiator install
Example of an installation using a hot water expansion tank, viewed from above, to circulate hot water for use in a radiator located in another cabin. In this install, the water expansion tank is equipped with a pressure relief. A shut-off is installed to allow flow to be shut off.

FIG 52

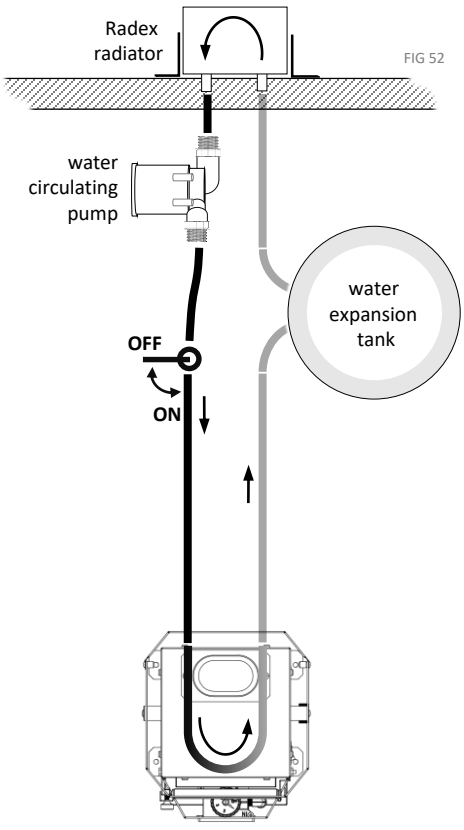

4. OPERATING INSTRUCTIONS

READ THIS BEFORE LIGHTING

CORRECT AND SAFE OPERATION

Operating a natural draft appliance safely and correctly requires an understanding of the information contained within this manual, including all information relating to installation requirements, operating procedures and safety warnings. A natural draft diesel appliance cannot be operated by anyone unfamiliar with its operation or unfamiliar with the contents of this manual.

Additionally it is strongly recommended that everyone putting a natural draft appliance into operation familiarizes themselves with the diesel appliance install, maintenance and operating video guides published by Dickinson Marine. These videos are available at **dickinsonmarine.com/pages/support** and can be found on **youtube.com/@dickinsonmarine1932**

Never put a natural draft diesel appliance into operation leave it to run in your absence. A person familiar with the contents of this manual must be present *at all times* to provide the adjustments required to maintain clean combustion inside the appliance.
THIS APPLIANCE MUST NEVER BE ALLOWED TO OPERATE UNATTENDED!

! CARBON MONOXIDE

WE STRONGLY RECOMMEND INSTALLING A CARBON MONOXIDE DETECTOR INSIDE THE ROOM WHERE YOU INSTALL THE APPLIANCE - A CO DETECTOR CAN SAVE LIVES!

Carbon Monoxide (CO) is a colorless, odorless and tasteless gas.
In homes and other enclosed spaces, carbon monoxide (CO) is dangerous; it can make you sick or, in extreme cases, cause brain damage and death. CO poisoning symptoms include headache, shortness of breath, dizziness, drowsiness, watering and sore eyes, confusion, nausea and fatigue. Even a small amount of CO is dangerous in your home, garage, vehicle, cottage, boat, recreational vehicle or tent. Children, people with heart and respiratory conditions, and the elderly, may be particularly sensitive to CO's effects.

- For your safety we recommend that a Carbon Monoxide detector be installed near the appliance
- NEVER operate this appliance with its glass cracked, damaged or removed.
- NEVER operate this appliance without the approved venting system installed to the manufacturers instructions
- Be aware of environmental signs, such as an abnormal burning odor, stale or stuffy air, abnormal moisture forming on windows and walls, soot on equipment or rich, dark flames in the appliance. If any of these occur, turn off the appliance and share your concerns with a licensed professional.

If you suspect CO is present or someone is showing symptoms of CO poisoning:

- Evacuate the building and call 911.
- If safe to do so, open windows and turn off appliances you suspect may be releasing CO.
- Call your propane supplier or a qualified service technician to check CO levels and your propane equipment

READ THIS BEFORE LIGHTING

UNMAINTAINED APPLIANCE & CHIMNEY RISK

Lighting an appliance that has not seen regular maintenance can represent a fire safety hazard.
A natural draft diesel appliance will require regular maintenance to ensure its operation is safe and correct!

If your chimney is coated inside with soot or carbon, it requires this to be cleaned out to operate safely.
Running an appliance with soot or carbon deposits lining the chimney restricts the draft that is essential to its safe operation!

FLOODED OR HOT BURNER RISK

Never light a flooded burner – the priming fuel should form a pool roughly 3 inches across.
If you see more fuel than this, do not light it!

If you've emptied a flooded burner your appliance must be serviced before it is safe to light again.
Just emptying the burner of fuel does nothing to prevent it flooding again!

If your appliance becomes extinguished you must not light it again until the burner has cooled to the touch.
Attempting to light a hot burner risks a dangerous explosion!

CARBON MONOXIDE

Carbon Monoxide is a colorless, odorless, flammable toxic gas created by incomplete combustion of carbon. **You cannot see, smell or otherwise detect the presence of carbon monoxide without the use of a carbon monoxide detector.**

We recommend that a carbon monoxide detector be installed in the vicinity of this appliance for the safety of everyone who may be using the space, as carbon monoxide poisoning can cause serious illness and death.

Carbon monoxide is created through incomplete combustion of carbon. While gasses created within the appliance will be drawn up the chimney away from the living space, unbalanced, sooty flames or carbon deposits in the burner indicate higher levels of exhaust gasses including carbon monoxide gas.
A natural draft diesel appliance must be well maintained and operated in a balanced way in order to minimize the risks of carbon monoxide poisoning.
See page 33 for more information on C0 safety

NEGATIVE PRESSURE

This appliance must never be run without an adequate source of fresh air. This appliance requires a source of fresh air to run.
Fresh air must be fed to the appliance at the same rate as it is being consumed by the combustion happening within.

Putting this appliance into operation without an adequate source of fresh air will starve the space of oxygen, causing a negative pressure which will cause exhaust to be drawn into the cabin.
If you cannot identify a reliable source of fresh air provided for this appliance, do not close windows, doors or hatches which may be supplying it with the air it requires.

DANGER!

Before attempting to light this appliance you must read and understand the safety warnings in this manual.
Failure to do so may put yourself or others at risk.

If you do not understand the potential risks associated with operating a natural draft diesel appliance, please consult with a licensed service technician before attempting to put one into operation.

FOR YOUR SAFETY READ BEFORE LIGHTING

WARNING: If you do not follow these instructions exactly, a fire or explosion may result causing property damage, personal injury, or loss of life.

A. This appliance is equipped with a natural draft breeze burner which must be primed and ignited manually using a wick.

B. **BEFORE LIGHTING**

- check around the appliance area for leaks. Check that the burner is clean and empty of fuel before allowing priming fuel to enter the burner.
- Check the metering valve on the appliance and overflow container for signs of fuel overflow.

NEVER LIGHT

- A flooded burner
- A hot burner or one just recently extinguished
- An appliance if the metering valve shows signs of overflow
- An appliance without verifying it has access to fresh air

C. Use only your hand to turn the metering valve control knob. Never use tools. If the knob will not turn by hand, don't try and repair it; call a qualified service technician. Forced or attempted repair may result in damage to the device.

D. Do not use this appliance if any part of it has been under water. Immediately call a qualified service technician to inspect the appliance and to replace any part of the control system and any gas control which has been under water.

OPERATING INSTRUCTIONS

1. **STOP!** Read the safety information above on this page.
2. Turn off all electric power to the appliance.
3. 3. Rotate the metering valve knob counter-clockwise to setting 5 in order to prime the burner

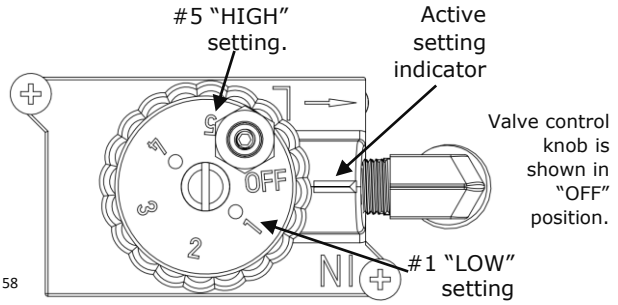

FIG 58

4. Wait five (5) minutes to allow priming fuel to accumulate in the burner. Primer fuel should fill the burner to a level no higher than 5/8th of an inch. If fuel in the burner is deeper than this or forms a pool over 3 inches in diameter, do not light the burner! Call a qualified service technician to service the appliance.
5. After allowing priming fuel to accumulate in the appliance for five (5) minutes, turn the valve control knob clockwise to the 'OFF' position.
6. Place the (burner ring(s), superheater and low sulfur baffle (if applicable) into the burner as shown on page 13 *(fig 12)*
7. Make a wick from a small twist of paper. Carefully light and drop the wick into the burner and use the auger tool to push it down into the bottom of the burner and into primer fuel. Do not attempt to push the burning wick in by hand!
8. Turn fan switch to ON and rotate the fan control knob clockwise until its indicator points down (6 o'clock position)
9. Monitor the liquid priming fuel as it burns. This will take ten to fifteen (10-15) minutes.
10. When the priming fuel has almost burned itself out, rotate the valve knob counter-clockwise to setting #2 and turn the fan ON/OFF control switch to 'OFF'
11. Continue to monitor the flames for ten to fifteen (10-15) minutes. You should see the flames rise to the burner ring.

High position



FIG 59

Fan control knob is shown in 'LOW' position.

12. Maintain a clean, balanced flame (blue-yellow flames without soot) by adjusting valve and fan controls to keep the air-fuel mix in the burner balanced.
13. Continue to monitor the operation of the appliance for the entire duration that it is running. Do not leave the appliance to operate unattended.

TO TURN OFF APPLIANCE

1. Rotate the valve control knob clockwise to the 'OFF' position. Do not force. The flames will gradually extinguish.
2. Close the shut-off valve on the fuel lines. Do not allow fuel to continue to flow to the appliance with the valve in the 'OFF' position.
3. If you are supplying the appliance with a fuel pump, switch power to the pump to 'OFF'
4. Turn off all electric power to the appliance if service is to be performed.

LIGHTING-UP PROCEDURE

FUEL SETTINGS ---------- FAN SETTINGS

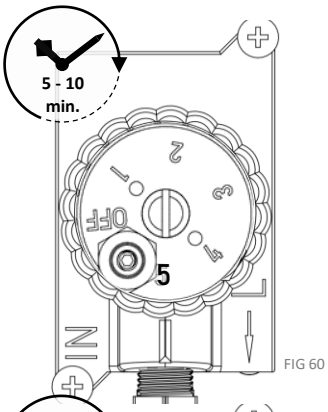

FIG 60

1. Priming the burner

Open the shut-off valve at the fuel tank and set the metering valve control knob to its highest setting (# 5)
Priming the burner will take between 5-10 minutes. The burner is primed once a pool of fuel roughly 2.5-3 inches in diameter has formed inside it.
Do not light the burner if the pool of fuel is growing and flooding the burner.

The fan can be switched 'OFF' during the priming step.

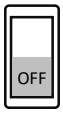



FIG 61

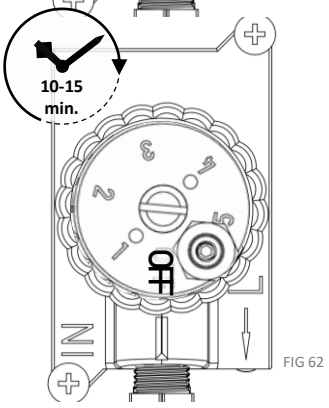

FIG 62

2. Burning the primer fuel

Set the metering valve control knob to 'OFF' before you ignite the primer fuel in the burner. Keep the valve in its 'OFF' position while the primer fuel is burning.
You must monitor the burning primer fuel carefully. We want to burn 80-90% of the priming fuel in order to heat the burner, but the flames must not be allowed to go out. It will take roughly 10-15 minutes to burn through most of the priming fuel, so be prepared to move on to step 3 as soon as the primer fuel is running out.

Switch the fan to 'ON' and rotate it's control clockwise approximately half-way, until it's indicator line is oriented down (at the 6 o'clock position)

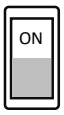

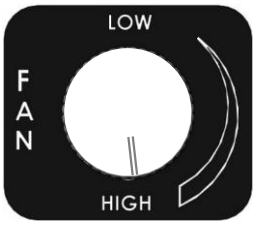

FIG 63

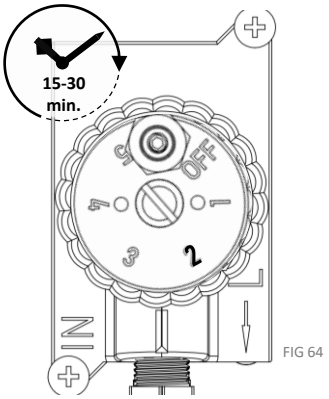

FIG 64

3. Fuel to Burner

When the priming fuel has nearly been burned up, rotate the valve control knob counter-clockwise to setting #2 – 2.5. This will allow fuel into the burner again.
Unlike the primer fuel, which burned in a liquid state, the fuel entering the now hot burner should begin to vaporize, mixing with air and burning with a cleaner flame.

The fan must be switched 'OFF' for now, allowing the flames to rise and establish themselves at the burner ring. If the fan is left 'ON' at this stage, the extra air it adds will drag the flames down back into the burner pot.

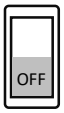

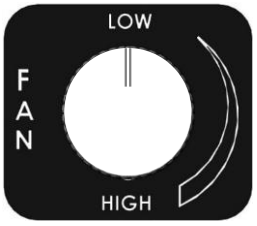

FIG 65

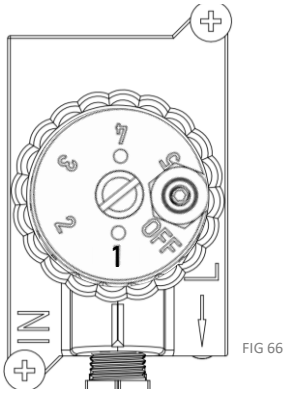

FIG 66

4. Balancing combustion

Once the flames have become established at the burner ring, continue to monitor the flames appearance and provide adjustments as required.
Remain with the appliance! As the appliance and its fuel continue to warm up, fuel will begin to flow faster and will likely need to be reduced.
If the flames turn orange or red in color, you will need to reduce fuel in order to maintain fuel/air balance within the burner.

Air can also be added by turning the fan on at a low speed at this point. Adding air will also help to balance the fuel-air mixture if the flames begin to appear orange-red in color.



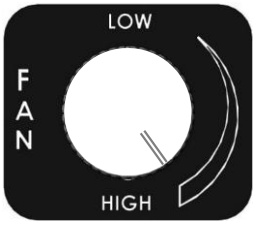

FIG 67

Continued on following page

FUEL SETTINGS ---------- FAN SETTINGS

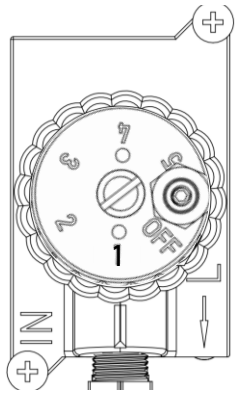

FIG 68

5. Accumulating heat

At this stage, even though the appliance has been burning for some time, we're still building up heat inside the burner. It can take around an hour or more for heat to spread evenly throughout the appliance.

Adjusting fuel settings too high before sufficient heat has accumulated in the burner will result in incomplete combustion and soot. **The burner must always be hot enough to vaporize the fuel entering it.**
If you notice soot, orange flames or a lot of liquid fuel at the bottom of the burner, these are signs your appliance is receiving more fuel than it's able to vaporize at this stage. Keep building heat slowly on a lower fuel setting if you notice any of these sings.

The fan can remain off as long as the flames are burning clean (blue-yellow) If you notice the flames becoming rich (orange-red) adjust fuel down and turn the fan on, set to a speed that improves the flame color without causing the flames to drop down into the burner. The flames should remain above the burner ring.

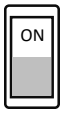

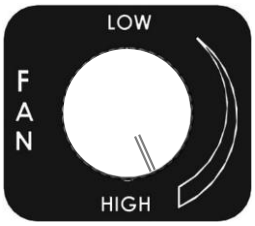

FIG 69

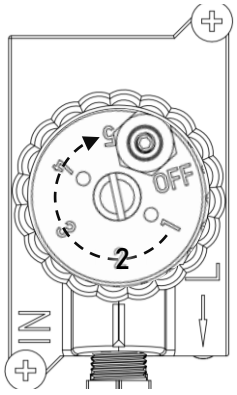

FIG 70

6. Allowing combustion to stabilize

Once the burner is hot enough to vaporize larger amounts of fuel, fuel to the burner can be increased. **It's best to adjust fuel by no more than 1 setting higher on the valve knob at a time and allowing the appliance to adapt to the larger fuel volume. Wait at least 15 minutes between increases.** If the flames turn orange-red, it means we've gone too far, and should reduce fuel again until more heat has built up.

If you increase fuel settings and find the quality of the flame is only slightly degraded, the fan can always be used to balance the flames. Clean, blue-yellow flames rely on a balanced mix of fuel and air, so both fuel and air adjustments can be used to achieve this. Higher fuel settings will call for higher fan speed settings.

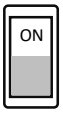

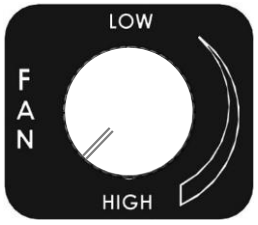

FIG 71

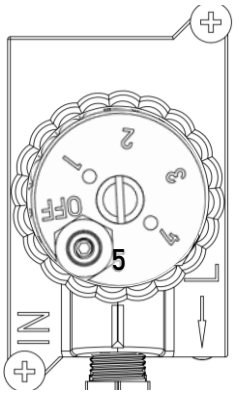

FIG 72

7. Equalization

Once temperature has equalized, meaning it has spread evenly throughout the appliance, so long as the burner has remained clean and has not fouled up with carbon, you will be able to select any fuel setting. **The burner is now hot enough to be able to vaporize any amount of fuel the valve is rated to provide.**

The fan will typically not be needed to maintain the fuel-air balance at this stage, but can be used if you are running settings 4-5, it's unusually windy or if a chimney is less than 6 feet in height.

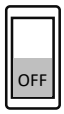



FIG 73

8. Shutting down the appliance

Turning off the appliance is accomplished by cutting off fuel – set the valve to 'OFF' and turn of fuel flow from the fuel source.

Leaving the fan running while the appliance is being turned off will help to reduce carbon deposited in the burner by the flames as they become extinguished.

THE IMPORTANCE OF THE FUEL AIR MIXTURE

It's easy to underestimate the importance of air flow when operating a natural draft diesel appliance. In order for a natural draft diesel appliance to operate safely and burn cleanly without soot or smoke, adequate air flow into the cabin is vital. The correct balance of fuel and air must always be established inside the burner to ensure clean and trouble free operation. Below are some examples of burning conditions to be avoided and tips on how to correct them.

INCORRECT ✗

Blue-yellow flames inside the burner pot

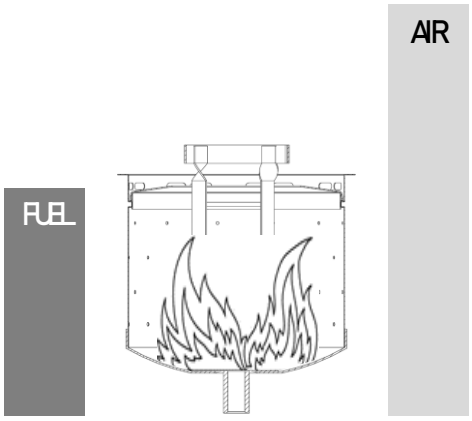

FIG 69

Too much air, burning too lean

Corrective actions:

- *Turn fan off, or reduce speed*
- *Adjust barometric damper open in ¼" increments*
- *Increase fuel in small increments*

INCORRECT ✗

Dirty orange-red flames

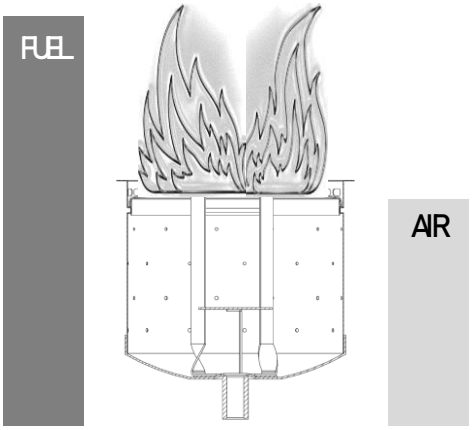

FIG 70

Too much fuel, burning too rich

Corrective actions:

- *Turn fan on, or increase speed*
- *Adjust barometric damper closed*
- *Reduce fuel in small increments*

INCORRECT ✗

Dirty orange-red flames inside the burner pot

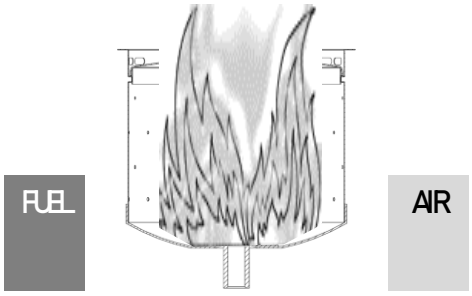

FIG 71

Not enough fuel or air

Corrective actions:

- *Turn on fan or increase fan speed*
- *Make sure the fresh air vent is open and unblocked*
- *Test the cabin for positive pressure* *(see page 40, fig 75 for draft test)*
- *Check that the air holes in the burner are unblocked*

CORRECT ✓

Blue-yellow flames above the burner ring only

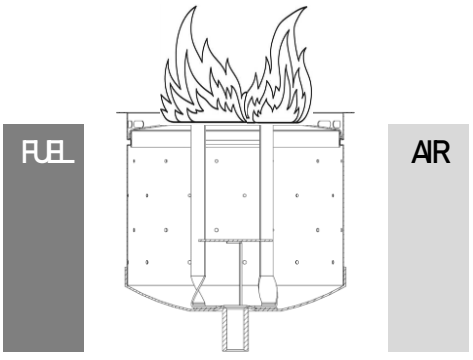

FIG 72

A balanced mix – burns clean and hot

When operating correctly;

- The flames should be yellow in color.
- You may also see some blue flame.
- The flame should produce no smoke.
- You should see very little liquid fuel inside the burner pot
- Portions of the burner parts may glow red hot
- There should be no dusting of soot on the viewing window

OPERATING TIPS

- Always clean new and old metering valves alike before first use (*see page 43 for instructions*) Clean the valve at the beginning of each season, anytime the appliance has sat unused for extended periods, at any signs of inconsistent fuel flow or if fuel is observed exiting the overflow.

- The first time the oil-metering valve is turned on it will take 5-10 minutes for the fuel lines to fill and oil to appear in the bottom of the burner.

- When placing the burner components inside the burner, push & twist the superheater into the bottom of the burner as if you were trying to leave a mark – this is to ensure good metal to metal contact. This is needed for efficient heat transfer.

- Do not use gasoline or other highly incendiary fuels to ignite the burner. Once lit, do not leave the appliance unattended for any length of time.

- Once fuel has been ignited, replace the lid or shut the burn chamber door to allow appliance combustion to normalize. Always operate the appliance with it's burner lid or door properly closed to encourage the natural draft.

- Wait 20 minutes for the appliance and its chimney to heat up in between valve setting adjustments. There may be a slight darkening in flame appearance as the added fuel adds its heat to the chimney and the draft action catches up. Allow 20 minutes for combustion to stabilize. Only increase fuel by a maximum of one number increment at a time.

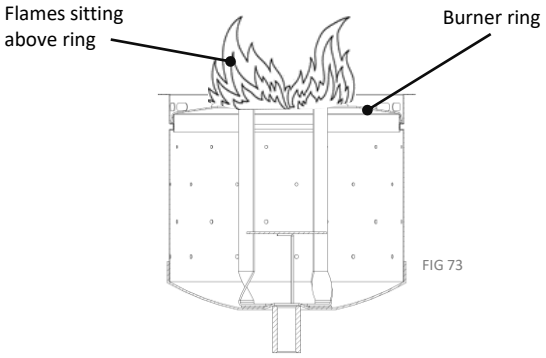

- The flames must always burn above the top burner ring regardless of the valve setting selected. The flames should never burn sooty and never burn below the burner ring.

- Operating the fan can deliver too much air and cause combustion to become too lean (with too much air in the fuel to air mixture) If you find that the flames disappear into the burner pot with an increase of fan speed, reduce the fan speed setting.

- Some fans have low amperage motors and need to have their speed controls turned up to a high setting to initiate spinning of the fan blades. Once the fan blades on a low amperage fan have begun to spin, any speed setting can be selected.

- Increasing fuel in **small** increments will make it easier for the draft to catch up with fuel increases. If the flames turn orange or begin to show blackening at their tips, increase fan air in small increments until the flame color returns to bright yellow.

- Running the fan at too high a speed can cause the fuel to burn off too quickly unbalancing the fuel and air and leading to carbon and soot. Clean flames depend on a balanced fuel & air mix. Adjusting fuel may require and adjustment of air to maintain this balance.

- frequent observation of the flames through the viewing window is required. The lid of a stove and on the Lofoten model heater should remain closed except for lighting. The door on all other heater models must remain closed after lighting. Opening access to the burner will alter the combustion balance until access is closed again.

- After the appliance has reached operating temperatures and the ambient temperature in the cabin warms up, the body of the metering valve and the fuel inside it will begin to warm up too and fuel will become thinner. Thinner fuel will flow more quickly and cause the heater to receive more fuel than previously – even if the fuel setting has not been changed. At this equalizing point the fuel setting may have to be reduced to maintain the same combustion balance.

- Varying weather conditions may call for adjustments to the way combustion is kept in balance. Some common variations are listed below.

Appliance temp / weather	Fuel setting on valve	Fan setting
Cold start	#2 - #3	Off
Low heat	#1 - #2	Off
Low heat (cold/windy day)	#2 - #3	Low
Medium heat	#3 - #4	medium
Medium heat (cold/windy day)	#4 - #5	high
Hot	#5	high

BAROMETRIC DAMPER SETTINGS

The burner will require less air when operating at lower fuel settings. Having too much air on low fuel settings may cause the flames to drop down into the burner pot. Reductions in air can be managed by turning off the fan or adjusting the barometric damper.

The more open the barometric damper flap sits, the less air will be fed to the burner.

In order to perfectly balance combustion, fuel may need to be added if the amount being burned is too little to generate draft. Draft is generated by accumulated heat within the chimney, and is also responsible for the intake of fresh air to the burner. Too little fuel being burned can result in too little heat, and insufficient air being drawn in to balance combustion overall.

It is preferable to generate more heat than desired and allow it to dissipate than to attempt to run the burner too lean with flames inside the burner pot. Flames burning within the burner pot cannot be balanced.

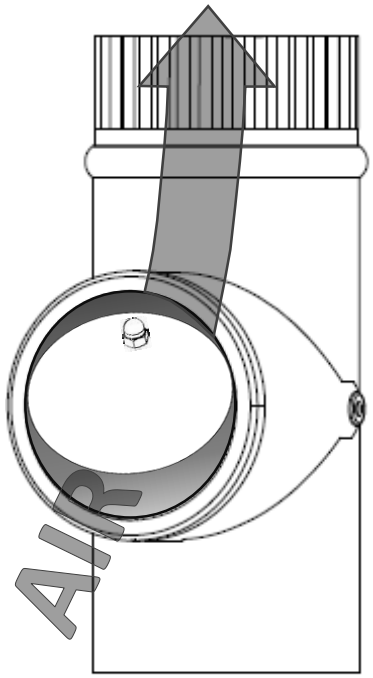

FIG 74

TESTING THE DRAFT

Natural Draft Within the Cabin

Test the draft within the cabin by rolling some paper into a wick. Light one end of this wick and hold it close to windows and vents. The direction its smoke is drawn will reveal the natural draft occurring within the cabin.

Installing or opening opposing vents will allow air to enter with the least amount of resistance and will be less likely to unbalance the draft within the chimney.

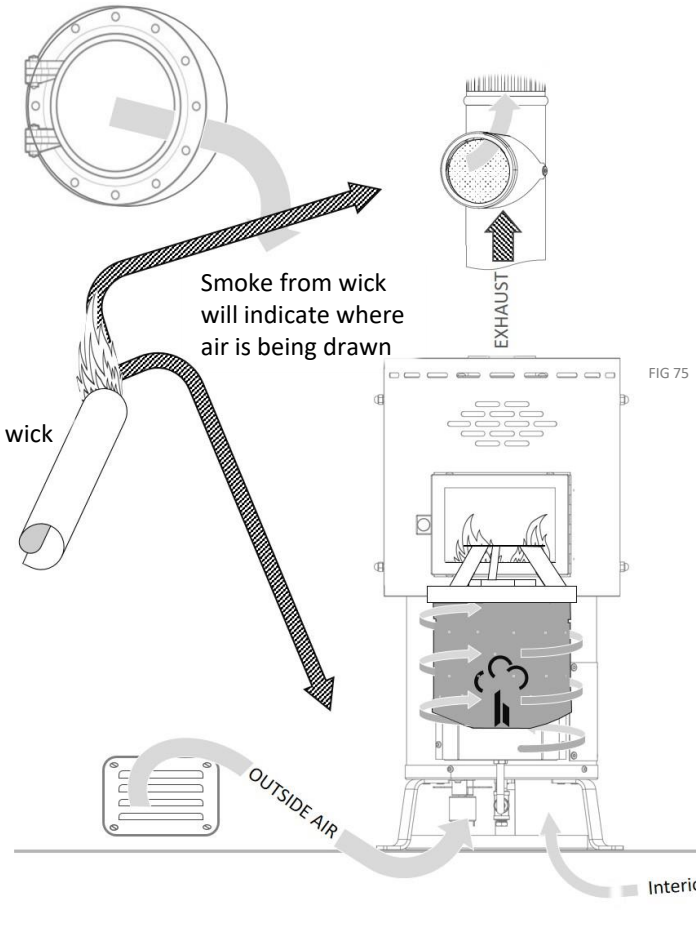

FIG 75

5. MAINTENANCE

SYSTEM MAINTENANCE

Understanding how to go about maintaining a natural draft diesel appliance is simplified if you learn to view the installation as a single system – it is best viewed as a single system that converts liquid diesel fuel into heat & exhaust.
When we consider the install as a single system, we can see that ensuring flow through the whole system is crucial to its trouble-free operation. Fuel must be allowed to flow consistently, the burner must heat the liquid fuel and not collect it, while the chimney must be allowed to develop a strong enough draft to suck exhaust up and out of the cabin. If any of these functions fails or becomes restricted, flow in other parts of the system will also become affected, reducing the effectiveness of the whole.

1 FUEL TANKS

Incomplete or noisy combustion in the burner can often be traced back to contamination in the fuel tank. Sounds of sizzling or bubbling from the burner are a sign that moisture within the fuel is evaporating on contact.
Contaminated fuel will make combustion more difficult to balance.
Organic and inorganic sludge accumulate within diesel tanks over time. Diesel fuel is likely to take on a darker hue when contaminated with sludge, and contaminated fuel will restrict fuel flow in the fuel lines and cause the moving parts of the metering valve to seize up and fail to meter consistently.

2 FUEL FILTERS

Fuel filters must be installed between the fuel tank and the metering valve. If your install uses a fuel pump the filter must be located on the fuel line before the pump. Fuel filters must be inspected regularly and their filtration elements replaced when necessary. When not regularly maintained a fuel filter may restrict fuel flow or become ineffective.
See page 48, fig 77 for fuel filter element replacement

3 FUEL PUMP

Fuel pumps can be used to feed the appliance from a main fuel tank if the appliance is not receiving fuel from a gravity feed tank. Because fuel pumps rely on power and pressure to deliver fuel to the appliance and have several moving parts, they can become a source of fuel flow issues. The most common issues that prevent pumps from delivering fuel are loss of pressure caused by air leaking into the fuel lines, and pumps that may have seized due to running dry.
See page 44 for pump cleaning instructions

4 METERING VALVE

The fuel metering valve maintains the operating oil level for the appliance, and it meters out the correct amount of fuel for each setting. Sticky fuel residue built up inside the metering valve will prevent its mechanism from moving smoothly and result in an inconsistent oil level.
See page 43, fig 82, for valve cleaning instructions

5 BURNER FUEL LINE

Any debris or blockage inside the fuel line connecting the metering valve to the burner may interrupt fuel delivery to the burner. The fuel line should be cleaned regularly to prevent deposits from building up inside.
See page 42, fig 78 for fuel line cleaning instructions

6 BURNER

The burner must vaporize the fuel entering it in order to maintain balanced combustion. In order for the burner to vaporize fuel, it must absorb enough heat. A burner can be prevented from absorbing enough heat by carbon deposits inside it which must be cleaned out. Air flow to the burner must also be maintained. If carbon deposits have formed they may be choking the burners air holes.
See page 42, fig 79 for burner cleaning instructions

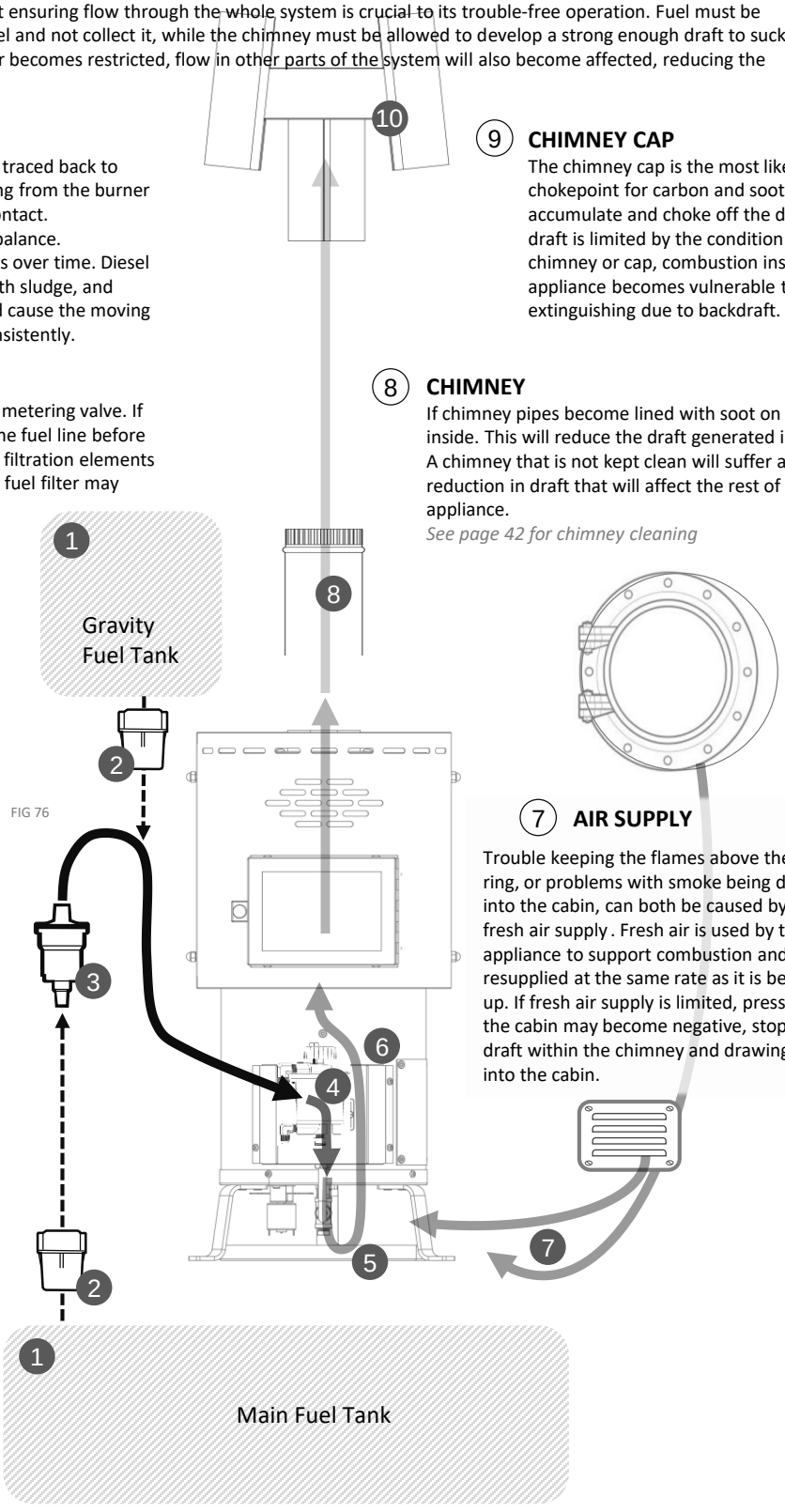

FIG 76

9 CHIMNEY CAP

The chimney cap is the most likely chokepoint for carbon and soot to accumulate and choke off the draft. If draft is limited by the condition of the chimney or cap, combustion inside the appliance becomes vulnerable to extinguishing due to backdraft.

8 CHIMNEY

If chimney pipes become lined with soot on the inside. This will reduce the draft generated inside. A chimney that is not kept clean will suffer a reduction in draft that will affect the rest of the appliance.
See page 42 for chimney cleaning

7 AIR SUPPLY

Trouble keeping the flames above the burner ring, or problems with smoke being drawn into the cabin, can both be caused by a lack of fresh air supply . Fresh air is used by the appliance to support combustion and must be resupplied at the same rate as it is being used up. If fresh air supply is limited, pressure in the cabin may become negative, stopping draft within the chimney and drawing smoke into the cabin.

FUEL FILTER MAINTENANCE

FUEL FILTERS

A fuel filter is required for the installation of a natural draft appliance in order to keep naturally occurring diesel fuel contaminants out of the fuel lines and the moving parts inside the metering valve.

The filter element will need to be exchanged from time to time as it becomes dirty. A fuel filter element may need to be replaced even if it is not visibly dirty to the naked eye. This element should be replaced every 1-2 years, or if fuel supply issues can be traced back to the filter.

When replacing the fuel filter, remember to replace both gaskets that seal the filter housing. If you are using a fuel pump, air being drawn into the pump on it's intake or 'pressure' side may cause the pump to function erratically. Make sure the fuel filter housing is properly assembled with its O-rings to prevent air leaks.

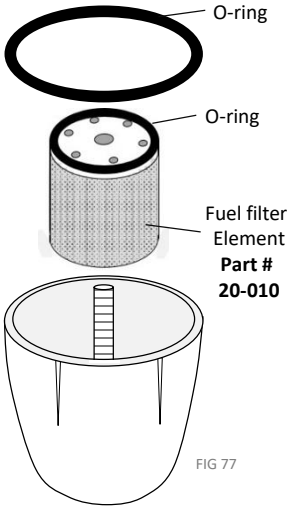

FIG 77

BURNER MAINTENANCE

BURNER MAINTENANCE & CLEANING

Keeping the burner clean is necessary in order to keep it vaporizing fuel. Carbon deposits inside the burner pot insulate the surface of the burner and prevent it from getting hot enough to vaporize fuel. Any soot or carbon inside the burner pot must be cleaned before lighting in order to ensure correct operation.

See below for tips on how to clean the burner pot.

- The burner is made from stainless steel. Abrasives such as Scotch-Brite, mild-grit sandpaper, Brillo pads, steel wool and wire brushes can be used to clean its surfaces. Scrub carbon deposits away to reveal clean metal beneath – a clean metal is needed in order for the burner interior to reach vaporizing temperatures.
- DO NOT clean the burner pot using chisels, screwdrivers or other pointed tools which may pierce or damage it. If carbon needs to be scraped from the bottom of the burner, use an wood or plastic tool that will not damage the burner.

FIG 79

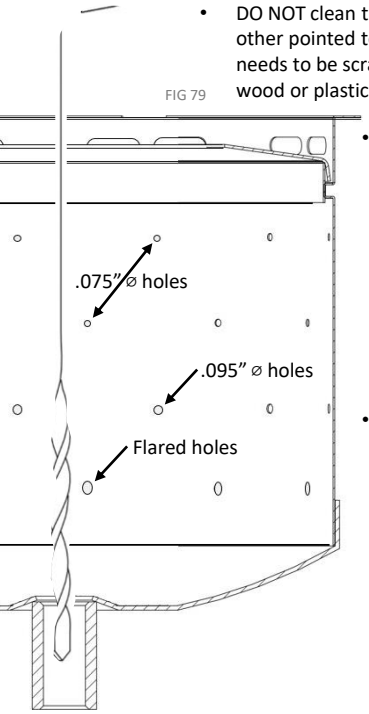

- Clean all air holes in the walls of the burner. Every hole must be clear to allow for proper air flow. Please note that the burner has rows of holes in different sizes. Do not force anything through the holes that might enlarge them. The bottom row of holes are flared outwards – DO NOT flare or bend holes in the burner that are not already flared. DO NOT drill additional holes into the burner pot.
- While cleaning the burner pot, the fuel inlet hole at the bottom can be plugged or covered to prevent debris from entering. To clean the inlet hole, remove the plug beneath the burner and clean using the auger supplied.

FUEL LINE MAINTENANCE

FUEL LINE

Deposits of carbon and dust from the burn chamber will collect inside the fuel line leading to the burner from the metering valve over time. Fuel passing through the line may fail to wash these out if they become adhered to sticky fuel residue inside the line.
Cleaning the line can help eliminate fuel flow issues, if fuel is not making its way from the valve to the burner, or if fuel flow appears inconsistent or reduced.

Detach the copper fuel line to clean it. Do not bend the line. The compression nuts will remain in place on the line for reattaching.

Clean the standpipe under the burner by removing the plug beneath (use a 5/8" socket or wrench) and cleaning the hole from above using the auger rod provided.

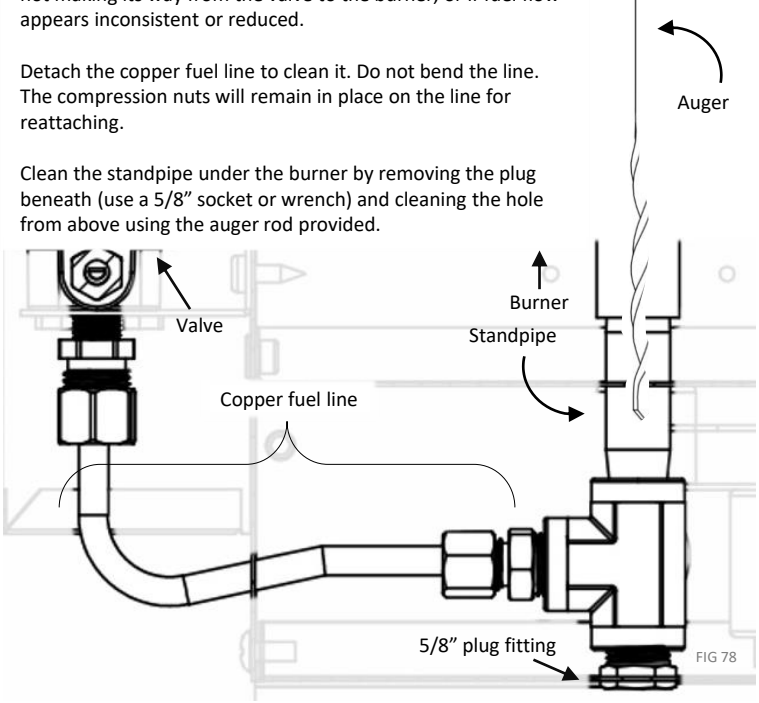

FIG 78

CHIMNEY & CAP MAINTENANCE

CHIMNEY & CHIMNEY CAP CLEANING

Cleaning of the chimney and cap simply involve ridding their interior of any carbon or soot.

See below for tips on how to go about cleaning the chimney pipes.

- AVOID USING CLEANERS AND ABRASIVES ON THE OUTSIDE OF THE CAPS – The chimney caps are electro-polished to a much finer degree than other chimney components to resist corrosion. Avoid scratching or damaging the smooth finish of these parts in any way during cleaning.
- Use a chimney cleaning brush. If you don't have one, wrap rags around a rod or stick like wadding to use to rid the chimney of loose soot. A brush may be needed to remove any hardened carbon deposits however.
- Avoid removing the deck fitting to clean the chimney. Leave its seal intact, and disassemble only sections that push-fit together. Removing and replacing the chimney cap may damage its hardware or gasket making it difficult to re-seal again.
- If you need to clean a DP chimney Cap, unscrew the acorn nut on its top and remove the top portion of the cap. If you cannot remove the cap to empty the it of debris, carbon and soot inside the cap can be blown/swept out of the gap you will see in between the wider part of the cap and its pipe.
- If you are cleaning an H chimney Cap, clean its open sections with a stiff wire brush. Gently tap the flat section of the cap to allow any carbon deposited there to fall out.

VALVE MAINTENANCE

Valve maintenance

The job of the metering valve is to maintain a steady oil level within the valve & burner, and to precisely meter out the correct amounts of fuel for each numbered fuel setting. In order to function as intended, the metering valve must be kept clean.

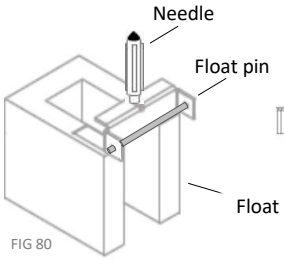

FIG 80

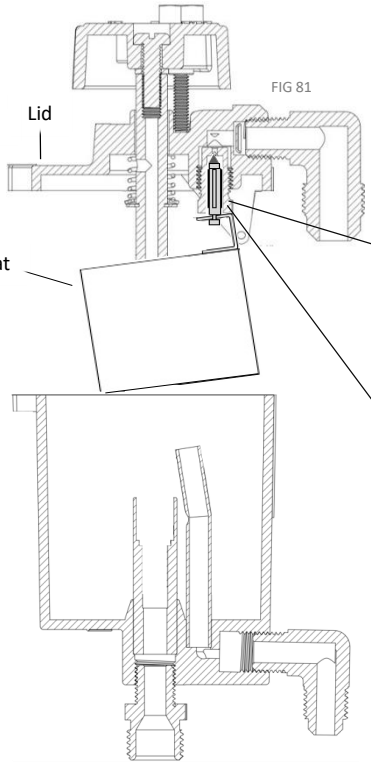

FIG 81

FIG 82

When should you clean the metering valve?

It is a good idea to clean the metering valve at the start of every season, if the appliance has sat unused for long enough to allow fuel inside the metering valve to dry out leaving sticky residue, or if fuel flow issues are noticed.

How to clean the metering valve

To restore the metering valve to proper functioning, the needle and seat must always be cleaned. The seat accumulates layers of dried fuel residue over time, which eventually cause the movement of the needle inside to become sticky. To clean the seat;

- Detach the inlet fuel line and remove the screws holding on the lid of the valve.
- The lid comes off with the float, float pin and needle attached. Slide the float pin out to release needle and float from the valve lid.
- With the needle removed, clean the seat that houses the needle repeatedly until a cotton swab comes away clean **(1)** Make sure the cotton swabs penetrate all the way into the seat tube and twist thoroughly to polish away any fuel residue.
- DO NOT use any cleaning agents or solvents to clean the valve as these may damage rubber seals used in the device.
- DO NOT remove the seat for cleaning, the height of the seat must not be altered by loosening or tightening it down.
- The spring loaded metering stem does not need to be removed from the lid in order to clean the valve.
- Reassemble the valve complete with the float, float pin and needle as shown above.

Calibrating and adjusting the metering valve

Cleaning the seat of the metering valve will correct the oil level if it was previously inconsistent. If the valve was calibrated or adjusted prior to cleaning, the calibration will need to be adjusted again in order to meter fuel in the correct amounts.

To calibrate the valve, use a 2mm allen key to turn the calibrating screw in small increments clockwise (to increase fuel flow) or in small increments counter-clockwise (to decrease fuel flow) *Note: to gain access to the calibrating screw, a smaller locking screw will first have to be removed.*

Detach the fuel line leading from the metering valve to the burner where it connects to the valve. This will allow fuel to drip straight down from the outlet of the metering valve so it can be measured. Follow the steps below and use the allen key to adjust the valve flow-rate to the match the correct flow-rate for your valve listed on the chart.

Valve type/Appliance	Flowrate on setting #1 (lowest setting)
3D / All heaters & stoves except 00-ATL	Should produce approx. 1 Tsp every 60 seconds
4D / Atlantic stove	Should produce approx. 1 Tsp every 50 seconds

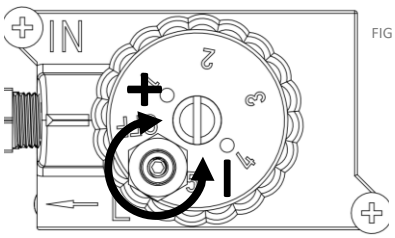

FIG 83

Use 2mm (0.78”) allen key to first remove the locking screw. Then turn the calibrating screw in small increments clockwise (to increase flow) or counter-clockwise (to decrease flow)

Resetting the high-fire fuse

The valve knob is equipped with a safety fuse designed to come apart & stop fuel supply if it becomes overheated. If the appliance runs too hot and shuts off, check the fuse for signs that it has been sprung due to overheating *(fig 84)* To reset the fuse, place it upside down in a pan until its solder melts and the nut drops back into place *(fig 85)* **Allow the fuse ample time to cool before handling after resetting!** *(fig 86)*

If a fuse has lost all its low-temperature solder it will not be possible to reset it.

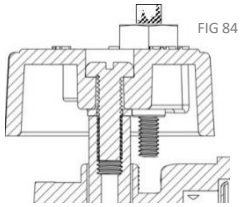
FIG 84

Before the fuse is reset and reattached, make sure you have cleaned & calibrated the metering valve to prevent the appliance from overheating again!

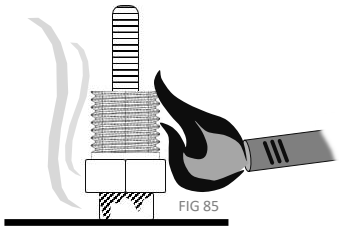
FIG 85

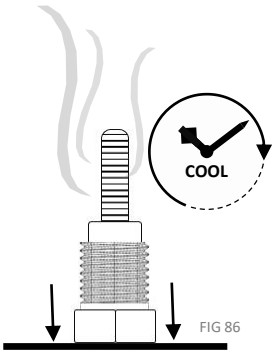

FIG 86

FUEL PUMP MAINTENANCE

FUEL PUMPS
In order to supply the appliance reliably a fuel pump must receive filtered fuel. It is best to orient the fuel pump so that it must draw fuel upwards from a source below.
The electrical components inside the fuel pump are permanently sealed to isolate them from the fuel running through the pump.

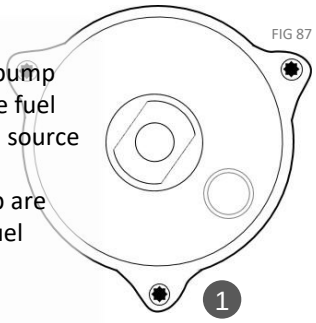
FIG 87

1

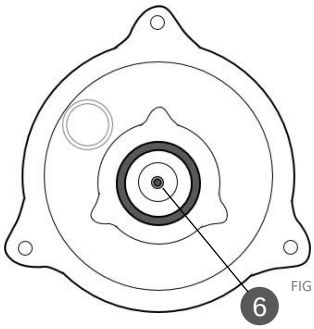
FIG 88

6


FIG 89

7

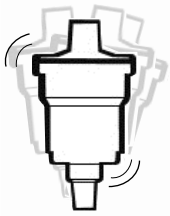

Air Leaks
Vibrating or chattering pump activity means that the pump is drawing in air as well as fuel. The location of such a leak will always be on the pressure side of the pump – between the pump and the fuel source. Any leaks must be carefully located and fittings tightened or lines repaired to eliminate the issue.



FIG 90

2

Cleaning
Cleaning the pump is the best method to ensure it will remain in good working order over its lifetime. The pump comprises a tube inside which a magnetic plunger moves up and down to draw fuel, while several check valves inside ensure fuel flows in the desired direction. If fuel delivery from the pump becomes inconsistent, check and lubricate each check valve to ensure they can open letting fuel enter and leave the pump.

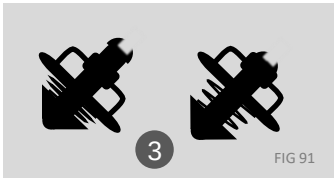
FIG 91

3

Disassembly & Cleaning

- The lid of the pump is held on by 3 torx screws **(1)** Remove these & hold the pump with its inlet upwards and twist to remove the lid. Inside you'll find all the pumps moving parts – spring plunger and spring check valve.
- Remove and shake the magnetic plunger **(2)** – movement should be heard and felt inside it. This movement indicates that the check valve inside the plunger is working
- The spring check valve should be assembled with a small spring and able to compress and spring back to shape **(3)**
- Verify that both these check valves are operational, then turn the pump upside-down and carefully reinstall the pumps parts in the order shown **(4) Insert the components all the way with a finger and hold them in place while you flip the pump back to right side up (5)** This will prevent the spring check valve from becoming dislodged inside the pump.
- Before reinstalling the lid press on the small hole in its center **(6)** – the small steel ball located here is the 3rd check valve, and should give way when pressed in and spring back into place.
- Lubricate the inside of the pump thoroughly with WD-40 before reassembling. Line up the lid gasket **(7)** carefully under the pump lid before tightening the screws in place.

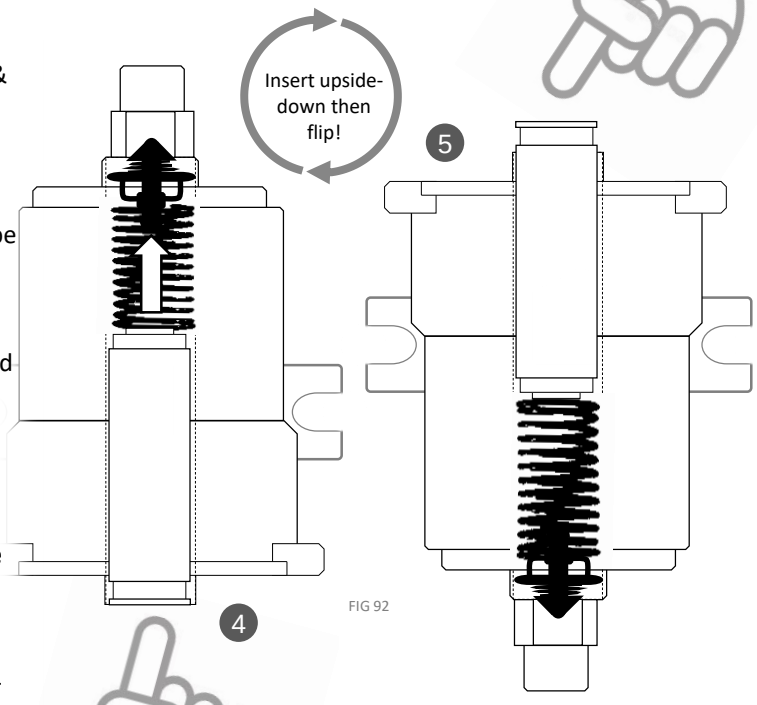

FIG 92

4

5

6. TROUBLESHOOTING

GENERAL ISSUES

Like with any piece of equipment, over time you may experience unexpected issues with appliance operation that may need to be corrected with maintenance or repair before proper operation can be resumed. These issues are generally caused by install deviations, alterations to existing installs, unbalanced operation, fuel system blockages or expected wear and tear on components.

The information contained within the troubleshooting section of this manual describes the most common issues and corrective actions that we are aware of for this appliance. In case of difficulty understanding or following the instructions, or a failure to correct the issue and return the appliance to its normal working condition, please email Dickinson marine to ask for assistance from our tech support team.

Reminder: Servicing and repairs should only be carried out by an authorized technician!

	List of troubleshooting guides	Page #
1	Appliance produces soot	
2	Appliance blows out	
3	Appliance doesn't produce enough heat	
4	Fuel flow is inconsistent	
5	Valve is leaking fuel	
6	Flames won't rise above the burner ring	
7	Fan operation is noisy	

TECHNICAL SUPPORT

Our tech support personnel are here to help explain any aspects of this manual, its instructions or the operation and servicing of the appliance. Dickinson Marine technicians draw on a wealth of experience gained from manufacturing and servicing thousands of Dickinson appliances.

In the event of any technical issues with the appliance, please email Dickinson with;

- The serial number & model name of your appliance
- A brief description of what the problem is and when it happens
- Pictures of the appliance install and the chimney (if applicable)

Please bear in mind that Dickinson technicians are available for remote support only and are by no means authorized to attend service calls or offer technical support or help in person.

APPLIANCE PRODUCES SOOT

APPLIANCE BLOWS OUT

CAUTION: ALWAYS FOLLOW THE MANUFACTURER'S LIGHTING INSTRUCTIONS FOR THIS APPLIANCE FOUND ON **PAGE 35**. FAILURE TO ADHERE TO SAFE RECOMMENDED LIGHTING PROCEDURES CAN RESULT IN INJURY, DAMAGE TO PROPERTY OR EVEN DEATH.

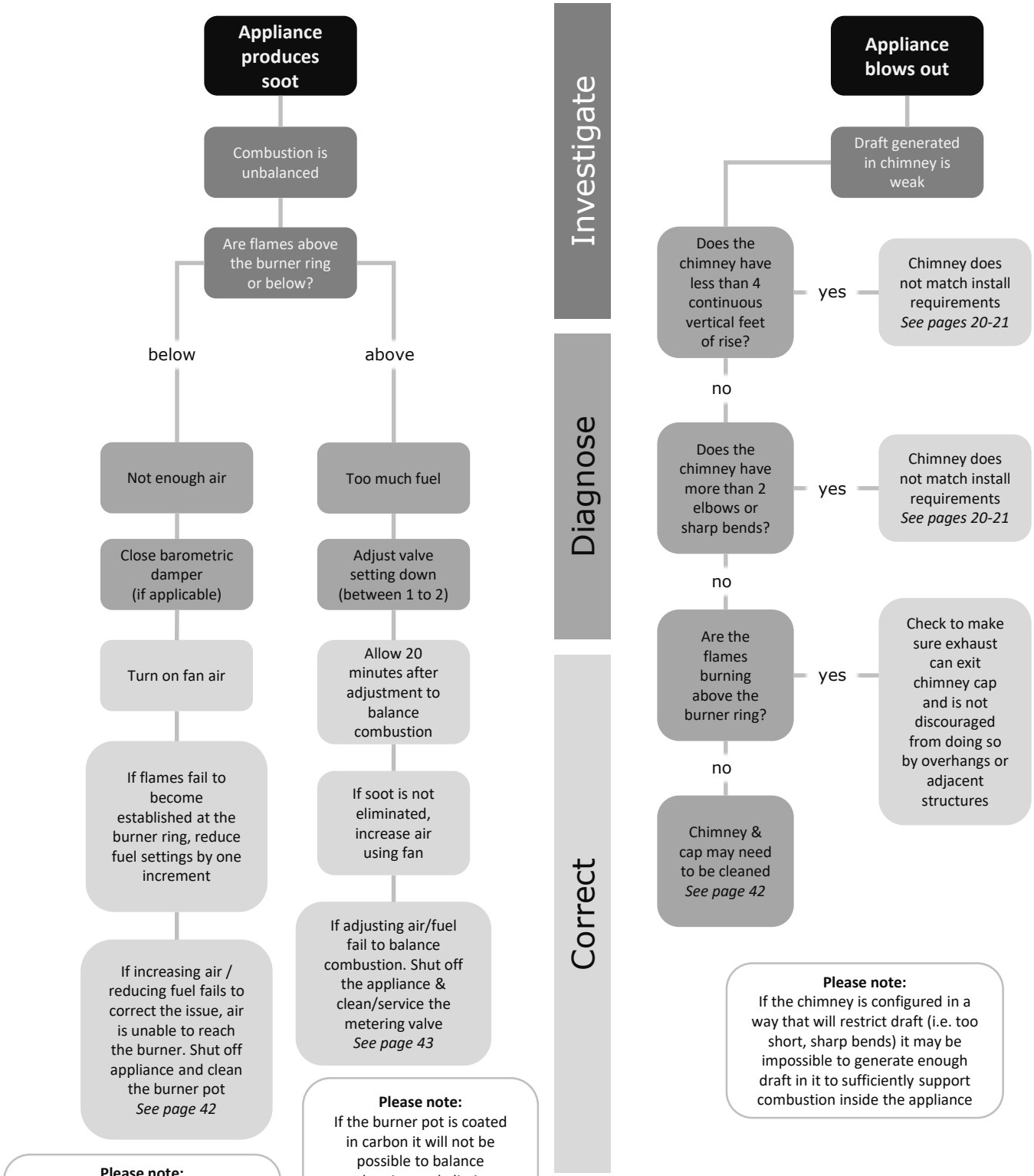

NOT PRODUCING ENOUGH HEAT

INCONSISTENT FUEL FLOW

CAUTION: ALWAYS FOLLOW THE MANUFACTURER'S LIGHTING INSTRUCTIONS FOR THIS APPLIANCE FOUND ON **PAGE 35**. FAILURE TO ADHERE TO SAFE RECOMMENDED LIGHTING PROCEDURES CAN RESULT IN INJURY, DAMAGE TO PROPERTY OR EVEN DEATH.

Appliance not producing enough heat

Has the appliance been operated for long enough to raise heat in the cabin?

No → It takes time to bring a natural draft appliance up to operating temperatures. In extremely cold conditions the time needed to bring an appliance up to operating temperatures will be increased

Yes, at least 1-2 hours

does the space it is installed in exceed the square footage the appliance is able to heat?

Yes? → *See page 16*

No

Could the presence of window panes, uninsulated bulkheads or degraded insulation be causing excessive heat loss?

No

Does the chimney have less than 4 continuous vertical feet of rise? Does it have elbows?

Yes? → Non-conforming installs may weaken the draft and reduce heat output. *See pages 20-21*

and/or

Are flames burning inside the burner pot?

Yes

Are flames predominantly blue?

Yes → Reduce air to burner by;
- Opening barometric damper
- Turning on fan

See page 38

No → Are flames predominantly orange?

Yes → Reduce fuel input. Turn off fan air / close barometric damper to help flames raise above burner ring. *See page 38*

Investigate

Diagnose

Correct

Fuel flow is inconsistent

Is the color & appearance of the flames consistent and steady?

Yes → Calibrate fuel flow *See page 43*

No

Is fuel exiting the valve's overflow fitting?

Yes

Is the pump pulsing/ticking consistently?

Yes → Are you supplying fuel from a pump?

Yes

Make sure the pump is not delivering fuel at pressure greater than 3 psi

See page 44 for pump priming & setting

No

Check fuel lines leading to pump for air leaks *See page 44*

No → Clean the valve needle & seat *See page 43*

Please note:
Any sign of fuel overflow, inconsistency or flooding must be corrected by disassembling and cleaning the needle & seat of the metering valve. See a video demonstration of this and other steps on the Dickinson Marine YouTube channel.

VALVE OVERFLOWING

VALVE LEAKING FUEL

CAUTION: ALWAYS FOLLOW THE MANUFACTURER'S LIGHTING INSTRUCTIONS FOR THIS APPLIANCE FOUND ON **PAGE 35**. FAILURE TO ADHERE TO SAFE RECOMMENDED LIGHTING PROCEDURES CAN RESULT IN INJURY, DAMAGE TO PROPERTY OR EVEN DEATH.

Investigate

Diagnose

Correct

Fuel is exiting the valve overflow

Is fuel being supplied via pump or gravity feed?

pump

Is the pump able to, or delivering more than 3 PSI of pressure?

yes

Adjust pressure regulator to limit fuel pressure.
See page 44

no

Clean needle & seat inside metering valve
See page 43

gravity

Is the gravity feed tank located 7 feet or higher above the appliance?

yes

Locate the tank at height under 7 feet or install pressure regulator
See page 29

Please note:
Any sign of fuel overflow, inconsistency or flooding must be corrected by disassembling and cleaning the needle & seat of the metering valve. See a video demonstration of this and other steps on the Dickinson Marine YouTube channel.

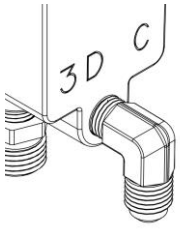

Valve overflow fitting

Fuel is exiting the valve housing

Is fuel being supplied via pump or gravity feed?

pump

Is the pump able to, or delivering more than 3 PSI of pressure?

yes

Adjust pressure regulator to limit fuel pressure.
See page 44

no

Fuel is unable to leave valve via overflow. Check overflow does not:

- Run uphill
- Have a cap or plug on it
- Have air trapped in lines

See page 27

gravity

Is the gravity feed tank located 7 feet or higher above the appliance?

yes

Locate the tank at height under 7 feet or install pressure regulator
See page 29

Please note:
A flooding valve is caused either by overpressure filling the valve more quickly than it can be evacuated via the overflow, or by a blocked overflow fitting or line. Make sure the overflow is not impeded in any way prior to putting the appliance into operation.

FLAMES BURNING INSIDE POT

FAN OPERATION IS NOISY

CAUTION: ALWAYS FOLLOW THE MANUFACTURER'S LIGHTING INSTRUCTIONS FOR THIS APPLIANCE FOUND ON **PAGE 35**. FAILURE TO ADHERE TO SAFE RECOMMENDED LIGHTING PROCEDURES CAN RESULT IN INJURY, DAMAGE TO PROPERTY OR EVEN DEATH.

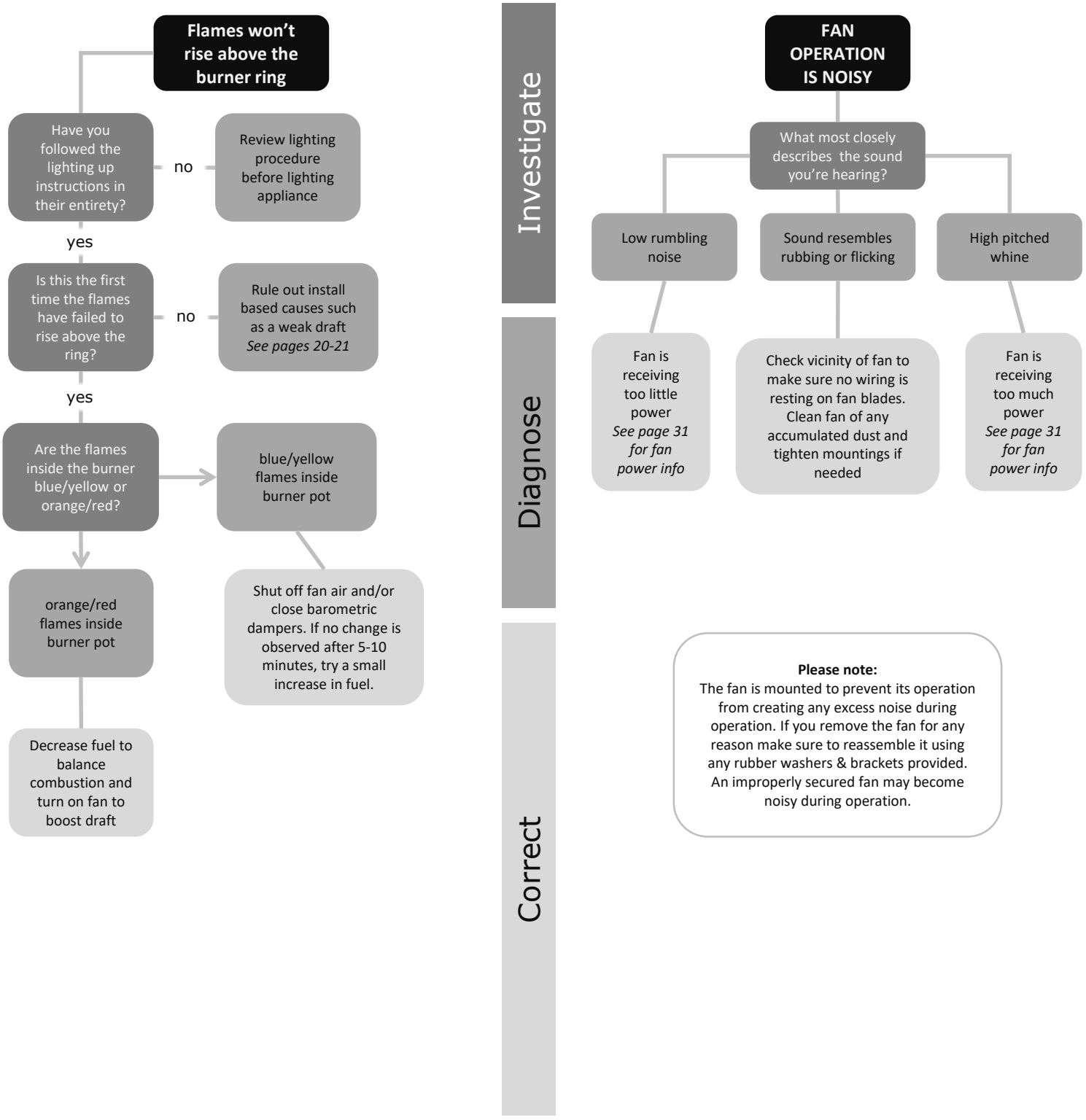

Please note:
The fan is mounted to prevent its operation from creating any excess noise during operation. If you remove the fan for any reason make sure to reassemble it using any rubber washers & brackets provided. An improperly secured fan may become noisy during operation.

GLOSSARY OF TERMS

ABYC	American boat & yacht council
Adriatic	Dickinson stove model
Atlantic	Dickinson stove model
Barometric damper	Provides air reduction to burner
Base ring	Lowest ring in a 7 inch burner
Bering	Dickinson stove model
Bristol	Dickinson stove model
BTU	British Thermal Units
Burn, lean	Flames burning with too little fuel
Burn, rich	Flames burning with too much fuel
Burner ring	The ring atop a 6 inch burner
Carbon monoxide	A poisonous, odorless tasteless gas produced by burning fuels
Carburetor	Another term used to refer to the ***Metering Valve***
Charlie noble	Another term used to refer to the ***Deck Fitting***
Check valve	A valve that allows flow of liquid in only one direction
Chimney run	The overall height, configuration and footprint of the chimney
Coils	A curved steel tube to allow for water heating in the burner
Crimp	The narrow, fluted end of a pipe allowing it to fit another
Deck fitting	The Flange that seals the exit hole for the heater
Diesel Valve	Another term used to refer to the metering valve
Diesel, #1	Winterized diesel, also called stove oil
Diesel, #2	The automotive diesel Dickinson appliances are calibrated for
DP-CAP	The round, Dickinson DP style chimney cap
Draft	Effect created when heat enters a chimney and is pulled upward
Draft Assist Fan	The built-in fan designed to increase appliance air intake
Drip Tray	The tray situated beneath the appliance to catch fuel drops
Electro-polish	A high polish with an extremely corrosion resistant finish
Equalizing	When the appliance has reached max. operating temperature
Filter element	The mesh filtration screen inside the filter housing
Fitting	A chimney or plumbing connector
Flare	A fuel line that's been widened at the end to a funnel like shape
Flaring tool	A tool used to flare the end of fuel line
Float	The buoyant component that floats within the valve oil reservoir
Flooded (burner)	A burner that overfills with fuel
Flooded (valve)	A valve that is leaking oil from the top of the valve housing
Flue	A chimney
Flue collar	The connection point for a chimney
Galvanized	A spangled, zinc like coating over steel
Gravity feed	A system that delivers fuel via gravity drip
H-CAP	A Dickinson H-style chimney cap
Head (pressure)	The pressure generated by a column of liquid, like a fuel line
Heel	The act of a boat tipping to one side
High fire fuse	The high-heat safety shut-off built into the metering valve
Impulse pump	Pumps that cycle to maintain a constant pressure
Keel	The longitudinal structure along the centerline under a boat
Leg ring	The middle burner ring of a 7 inch burner
Leveling block	A block designed to provide a flat surface for the deck fitting
Lock screw	Screw to stop valve calibration screw from accidentally turning
Low-sulfur baffle	Top most component for a 6 inch burner
Metering (fuel)	The act of dispensing pre-determined amounts of fuel
Metering stem	The stem that controls the fuel volume able to exit a valve
Metering valve	The device on the appliance that measures out fuel to the burner
Natural Draft	The cycle of combustion exhaust rising and drawing in fresh air
Needle	The part inside the valve which plugs the fuel inlet
Negative pressure	When pressure in the cabin drops below that of pressure outside
Oil level	The pre-determined max. fuel rise level for the valve and burner
Overflow	Fuel rising inside the valve until it exits the valve overflow fitting
Overpressure (valve)	Fuel pressure that overpowers the valve float switch
Pacific	Dickinson Stove model
Pitch	The degree of angle of a roof or surface
Plunger	The part inside the pump that moves generating pressure
Potentiometer	Another terms for **speed control**
Primer fuel	Puddle of fuel burned inside burner to accumulate heat
Protected surface	A non-flammable surface
Protective plastic	The plastic protecting the stainless steel finish of the appliance
PSI	Pounds per Square Inch
Radex	A Dickinson hot water radiator model
Sea Rail	A rail on a stovetop designed to stop pots & pans from sliding off
Seat	The threaded nut that houses the needle inside the valve
Set screw	The screw on a valve or regulator that allows for adjustment
Siphon	Liquid being drawn upwards and then down of its own accord
Speed control	The control used to adjust the fan speed
Split-rings	The uppermost set of burner rings in a 7 inch burner
Standpipe	The fuel pipe that connects the valve fuel line to the burner pot
Stove oil	Another term for winterized or #1 diesel
Superheater	A device used to transfer heat from the flames to the burner pot
Thermocouple	A flame sensing probe that allows the gas valve to supply fuel
Tie Down Bar	A crosspiece installed beneath a stove to stop it pitching forward
Water circulating pump	A pump to assist the passage of hot water through a coil system
Wick	A twist of paper you light to ignite burner priming fuel

LIST OF ILLUSTRATIONS

PAGE #	DESCRIPTION	FIG
6	NEWPORT HEATER IMAGE	1
9	NEWPORT MODEL	2
9	ALASKA MODEL	3
9	LOFOTEN MODEL	4
9	ANTARCTIC MODEL	5
10	SAFETY CLEARANCES	6
10	EXAMPLE OF TILED SURFACE	7
10	EXAMPLE OF STANDOFF STEEL SURFACE	8
10	HEATER INSTALL	9
12	NATURAL DRAFT DIAGRAM	10
13	6” BURNER COMPONENTS	11
13	6” BURNER DIAGRAM	12
14	6” BURNER DIAGRAM	13
14	VALVE OIL LEVEL	14
14	VALVE: VIEW FROM ABOVE	15
17	SAILBOAT HEEL EFFECT	16
17	KEEL ALIGNMENT & ORIENTATION	17
17	DP-CAP	18
17	H-CAP	19
20	CHIMNEY VARIATIONS	20
21	UNSUPPORTED CHIMNEY VARIATIONS	21
21	ALUMINIUM & GALVANIZED PIPE IMAGES	22
22	CHIMNEY INSTALL	23
22	APPLIANCE LEVELING	24
23	DECK FITTING INSTALL	25
23	DECK FITTING DIAGRAM	26
23	DECK FITTING SEAL	27
24	DECK FITTING ANGLES	28
24	EXAMPLES OF LEVELLING BLOCKS	29
24	UNSUPPORTED INSTALLS	30
25	FLUE COLLAR CONNECTION	31
25	3” FLUE COLLAR	32
25	4” FLUE COLLAR	33
26	VALVE SIDE VIEW	34
26	VALVE CROSS-SECTION	35
26	NEEDLE & SEAT	36
26	OIL LEVEL	37
27	VALVE: EMPTY	38
27	VALVE: FILLING	39
27	VALVE: PRIMED	40
27	VALVE: METERING FUEL	41
27	VALVE: OVERFLOW	42
27	VALVE: FLOODING	43
27	VALVE: OVERPRESSURE	44
29	GRAVITY FEED SETUP	45
29	PUMP FEED SETUP	46
30	PUMP ORIENTATION	47
30	FUEL PRESSURE REGULATOR	48
31	FAN WIRING	49
31	BURNER AIR HOLES	50
32	HOT WATER INSTALL	51
32	RADIATOR INSTALL	52
35	VALVE CONTROL	53
35	FAN CONTROL	54
36	FUEL SETTING: #5	55
36	FAN SETTING: OFF	56
36	FUEL SETTING: OFF	57
36	FAN SETTING: MED	58
36	FUEL SETTING: #2.5	59
36	FAN SETTING: OFF	60
36	FUEL SETTING: #1	61
36	FAN SETTING: LOW	62
37	FUEL SETTING: #1	63
37	FAN SETTING: LOW	64
37	FUEL SETTING: #1 +	65
37	FAN SETTING: MED	66
37	FUEL SETTING: #5	67
37	FAN SETTING: OFF	68
38	LEAN BURN	69
38	RICH BURN	70
38	UNBALANCED COMBUSTION	71
38	BALANCED COMBUSTION	72
39	6” BURNER FLAMES	73
40	BAROMETRIC DAMPER	74
40	DRAFT TEST	75
41	NATURAL DRAFT DIAGRAM	76
42	FUEL FILTER ASSEMBLY	77
42	BURNER FUEL LINE	78
42	BURNER AIR HOLES	79
43	FLOAT / FLOAT PIN / NEEDLE ASSEMBLY	80
43	VALVE DISASSEMBLY	81
43	SEAT CLEANING DETAIL	82
43	VALVE CALIBRATION ADJUSTMENT	83
43	POPPED HIGH FIRE FUSE	84
43	HIGH FIRE RESET 1	85
43	HIGH FIRE RESET 2	86
44	PUMP LID SCREWS	87
44	PUMP CHECK VALVE	88
44	PUMP LID GASKET	89
44	PUMP PARTS ORIENTATION	90
44	SPRING CHECK VALVE	91
44	PUMP PARTS ASSEMBLY	92

All rights reserved. No part of this manual may be reproduced without permission in writing from Dickinson Marine. Dickinson also reserves the right to modify or change without notice, any materials, applications, equipment, accessories, and/or prices. All dimensions, measurements and weights are approximate.

Dickinson Marine #101 - 17728 66 Ave, Surrey, BC,
Canada, V3S 7X1
Email: info@dickinsonmarine.com