BERING Diesel Stove

00-BER, 00-BER-12-1T, 00-BER-12-2T*

*00-BER-12-1T & 00-BER-12-2T includes water heating coil option



Key Features

- Stainless steel body & construction
- Designed for Marine use
- Produces heat even without connection to power
- Safety fuse offers overheating protection
- Floor mounted
- Built in draft assist
- Externally mounted fan control

Capacity & Specifications

- Draft type: Natural Draft
- Max. Heating capacity: 800 sq. ft
- Fuel input: #2 Diesel
- Max. fuel input pressure: 3 PSI
- BTU/hr: 16250
- Electrical input: 12 Vdc, .4 amp
- Draft assist fan: built-in
- Metering valve rating: 3D
- Flue diameter: 5”
- Min / max flue heights: 4’ / 10’
- Dimensions (inches): H 23.50, W 23.25, D 16.25
- Oven dimensions (inches) H 10.50, W 10.50, D 12.75
- Safety clearances (inches): 36 above, 2* sides & behind

*to protected surface

Venting Components

5” x 24” s/s pipe	18-000
5” x 24” s/s pipe with barometric damper	18-001
5” x 7” s/s pipe with barometric damper	18-010
5” x 45° s/s elbow	18-040
5” s/s deck fitting, gasket & dress ring	18-050
5” s/s DP exhaust cap	18-080
5” s/s H exhaust cap	18-090
5” s/s flue pipe rain lid	18-200
12” x 24” s/s wall liner	25-000

Installation Components included

- Fuel Metering Valve
- Auger
- Low sulfur baffle
- Super-heater & burner ring
- Oven rack
- Pot holders

Fuel Supply Components

Fuel Tank 2 gallon	24-001
Fuel Tank 5 gallon	24-002
Fuel Filter & shut off	20-010
Fuel Pump	20-000
Fuel Pump - heavy duty	20-002

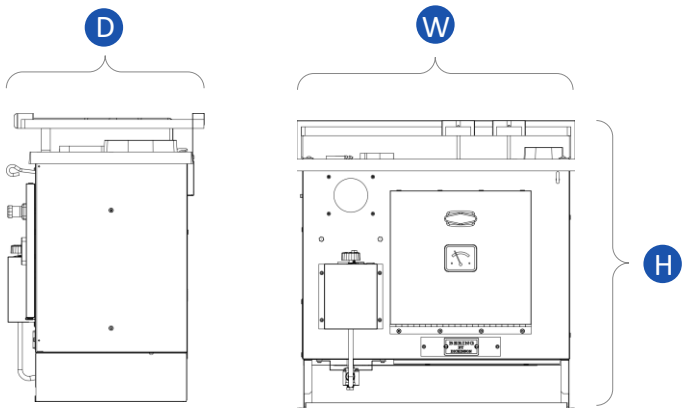

NOTE: Dimensions are for planning purposes only. For complete details, see installation instructions with product. Specifications subject to change without notice. All rights reserved.