ITEM NO.	DESCRIPTION2	QTY.
1	MAXI G2 RUNKO	1
2	MAXI G2 KOROKERUNKO	1
3	MAXI G2 KANSI	1
4	MAXI G2 TIIVISTE	2
5	KANNEN KIINNITYSRUUVIT	20
6	KOROKKEEN KIINNITYSRUUVIT	20

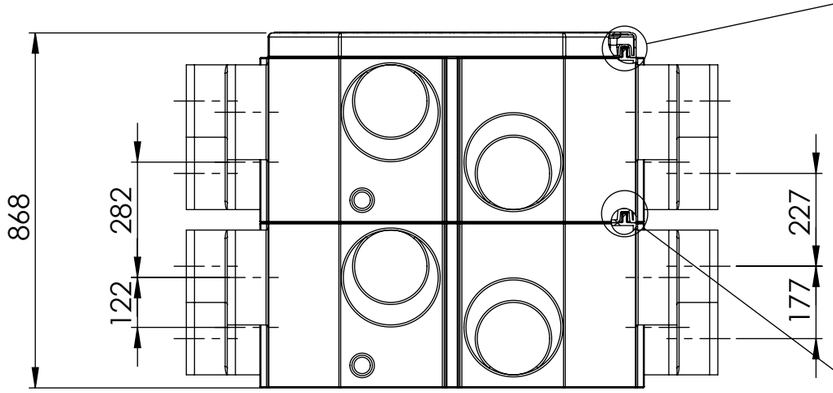

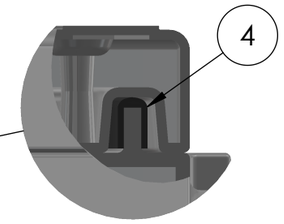

DETAIL A

SCALE 1 : 3

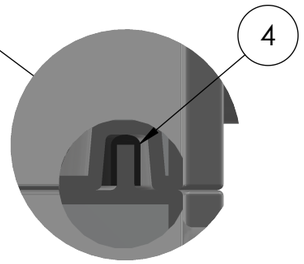

DETAIL B

SCALE 1 : 3

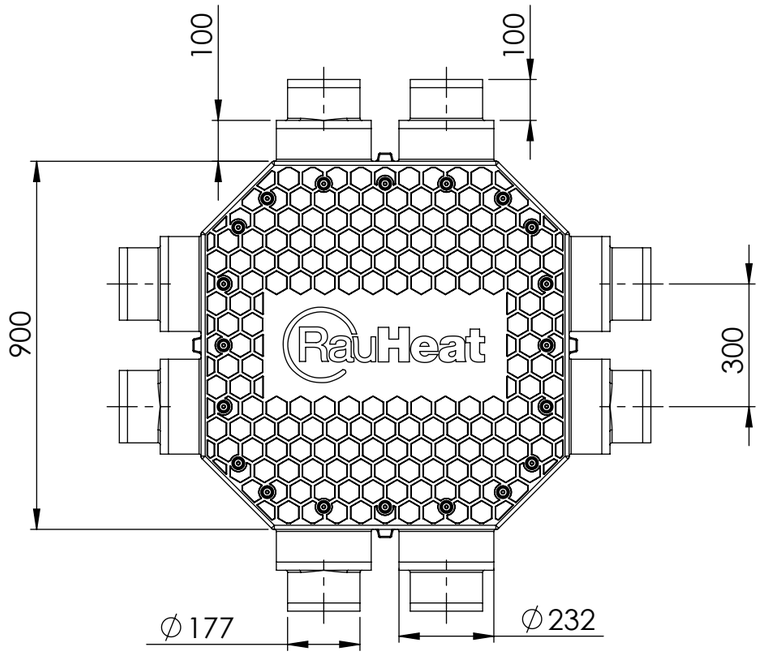

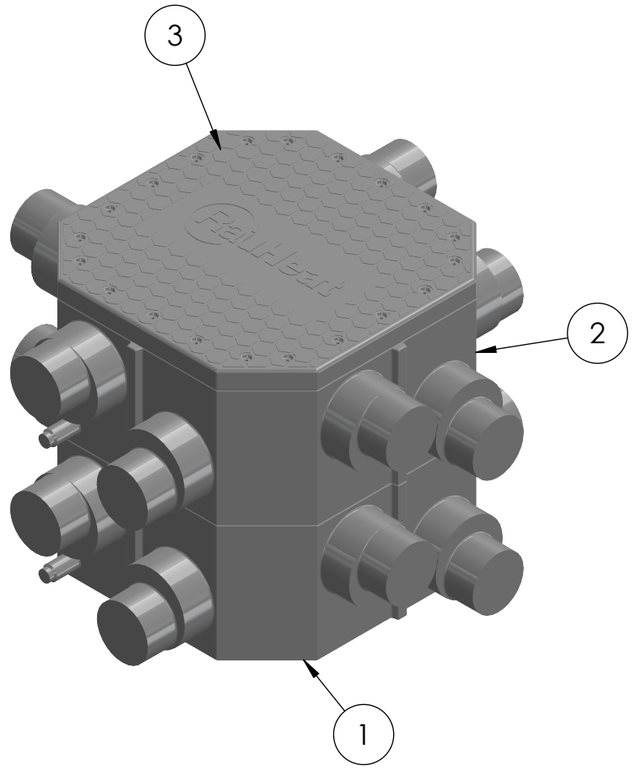

Tolerance:	Mass 53 kg	Color	
	Size / Scale A3 1:15	Material	
		Description Haaroituskaivo Maxi G2 High 3011344	

Rev Description	Designed By	Approved by