Change description	Date	Designed by

MAIN DIMENSIONS

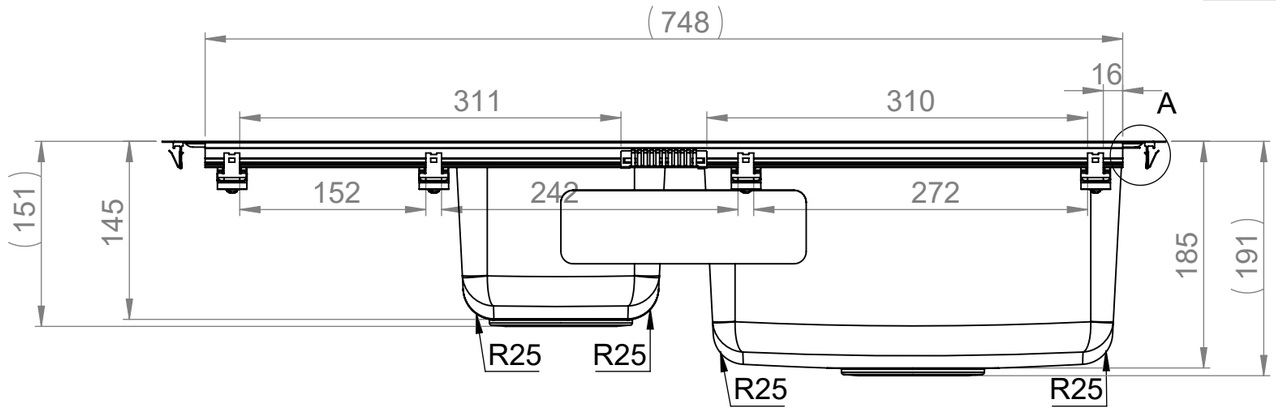

DETAIL A
SCALE 2 : 1

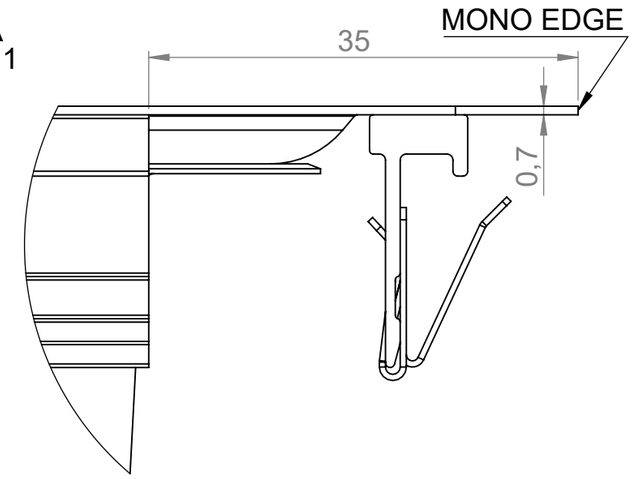

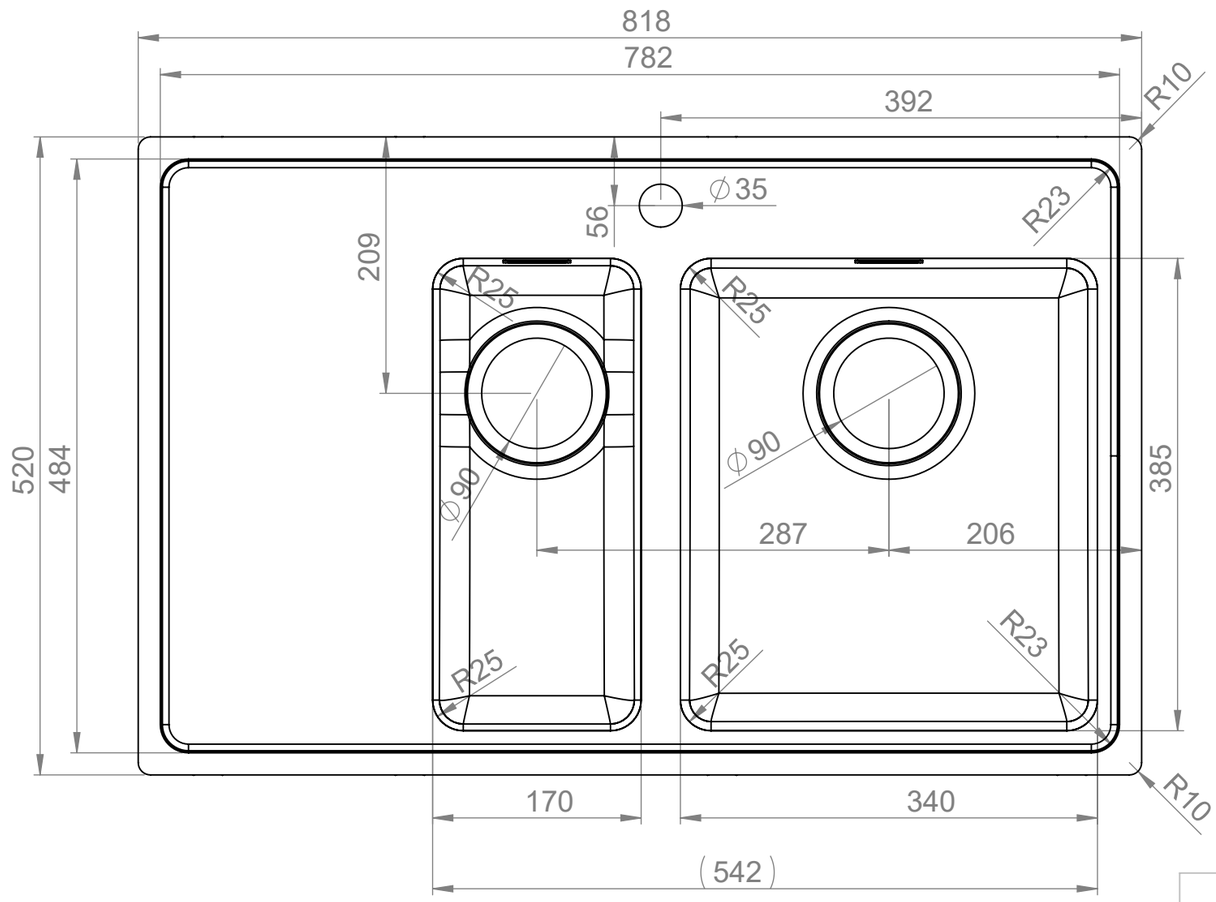

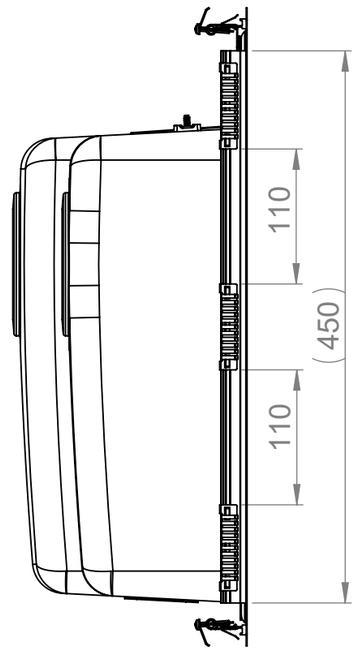

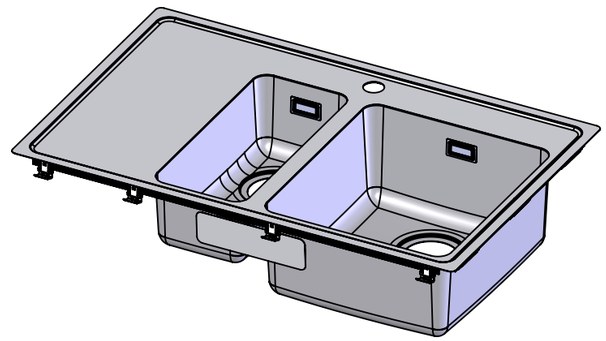

Mass kg		General tolerance	Designed by PJ	Date 03.03.2023
Size A3	Scale 1:5	Item	Approved by VS	Date 09.08.2023
STALA Member of ALVEUS		Description ONE-TDL17-34 Technical Data Sheet	Drawing number 19611	Sheet/sheets 1/6
				Rev A

WORKTOP ASSEMBLY

Change description	Date	Designed by

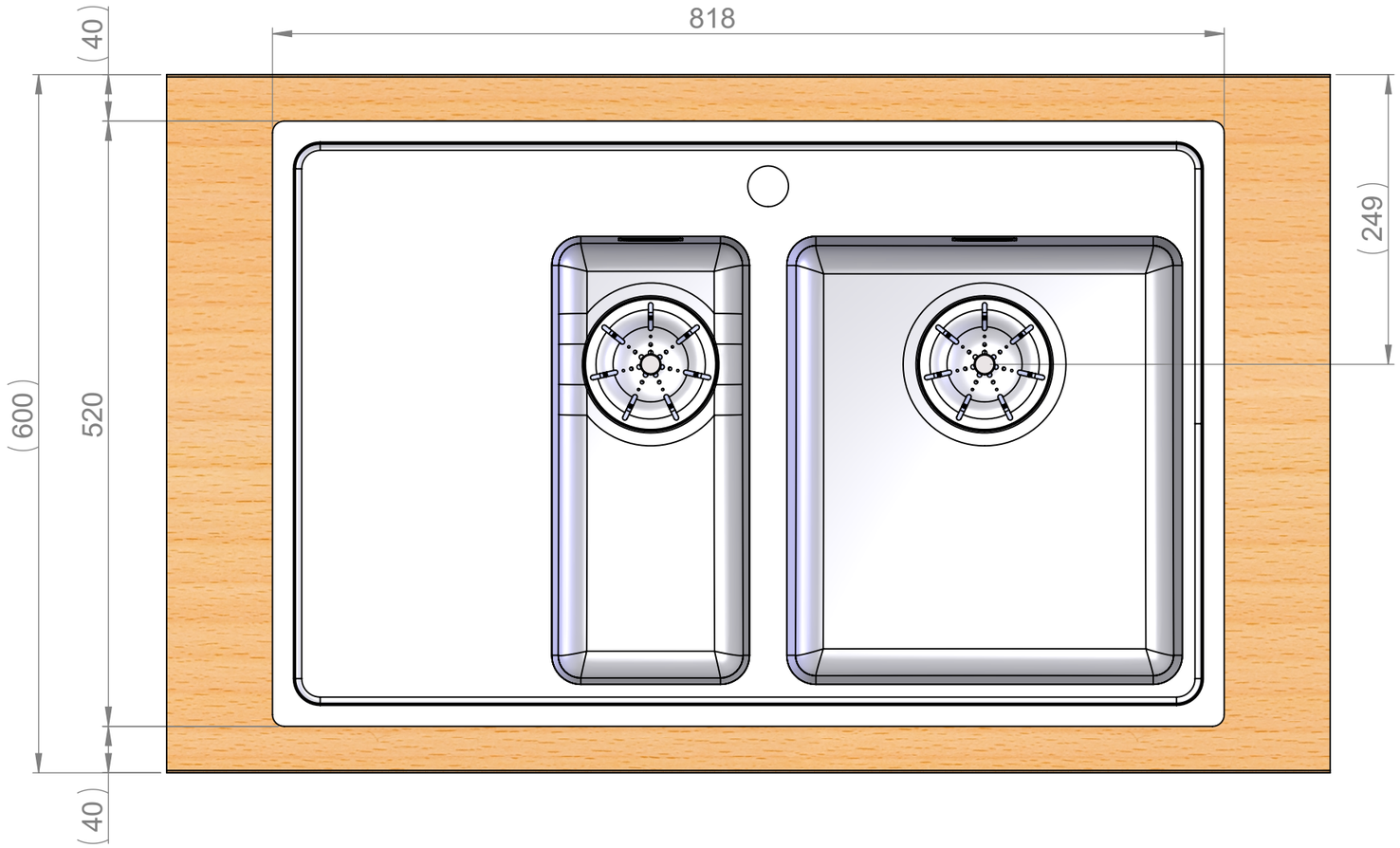

	Mass kg	General tolerance	Designed by PJ	Date 03.03.2023
	Size A3 / Scale 1:5	Item	Approved by VS	Date 09.08.2023
STALA Member of ALVEUS		Description ONE-TDL17-34 Technical Data Sheet	Drawing number 19611	Sheet/sheets 2/6
				Rev A

Change description	Date	Designed by

SPACE REQUIREMENTS

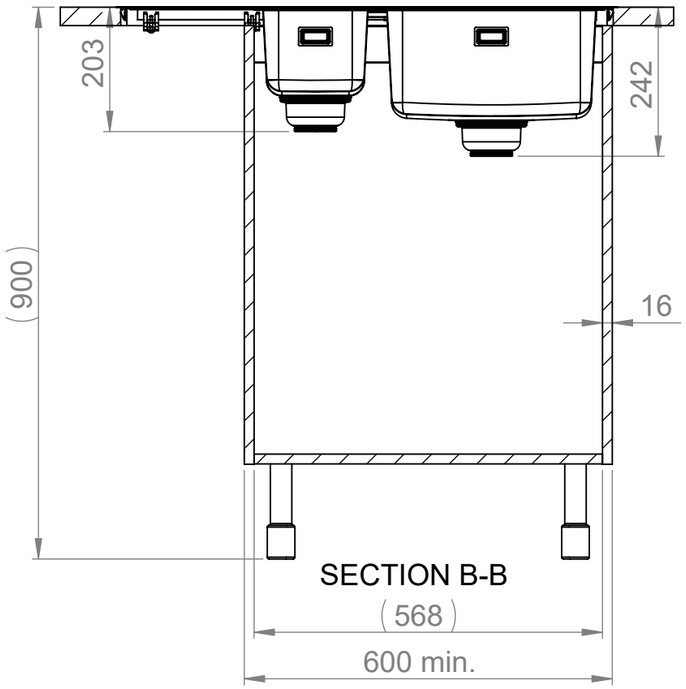

SECTION B-B

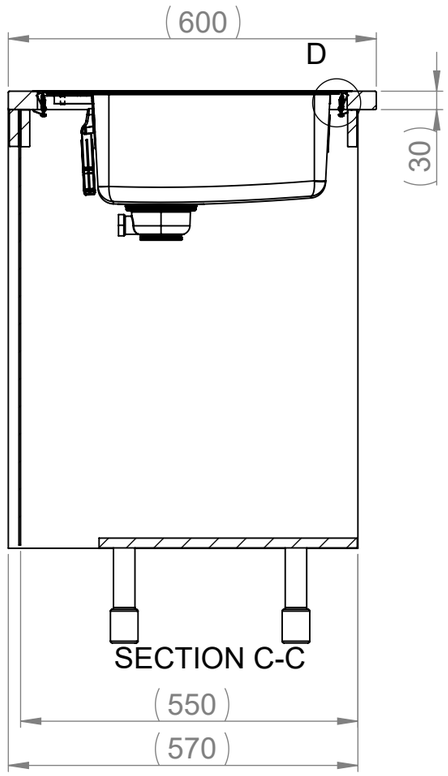

SECTION C-C

DETAIL D
SCALE 1 : 1

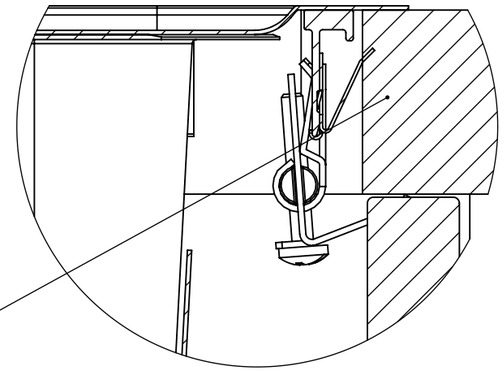

Huom!
Tarvittaessa kaapin väliseinää ja etu/takalistaa lovettava kiinnikkeitä varten ja pesuallas on kiinnitettävä ennen työtason asennusta.
Obs!
Vid behov måste en inskärning för hofästena göras i skåpets mellanvägg och förbindningslist och diskbänken måste fästas innan du monterar bänkskivan.
Notice!
The partition walls and front/back list of the cupboard must be notched for the sink mountings when needed and the sink must be fastened before installing the worktop.

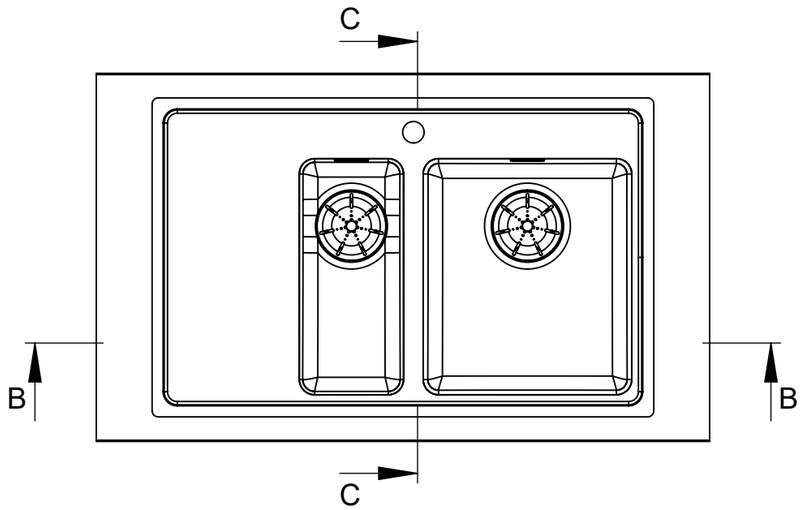

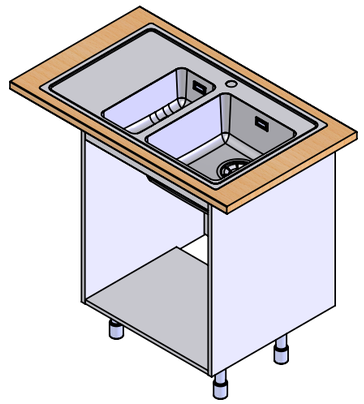

	Mass kg	General tolerance	Designed by PJ	Date 03.03.2023
	Size A3 / Scale 1:10	Item	Approved by VS	Date 09.08.2023
STALA Member of ALVEUS		Description ONE-TDL17-34 Technical Data Sheet	Drawing number 19611	Sheet/sheets 3/6
				Rev A

CUT-OUT

Change description	Date	Designed by

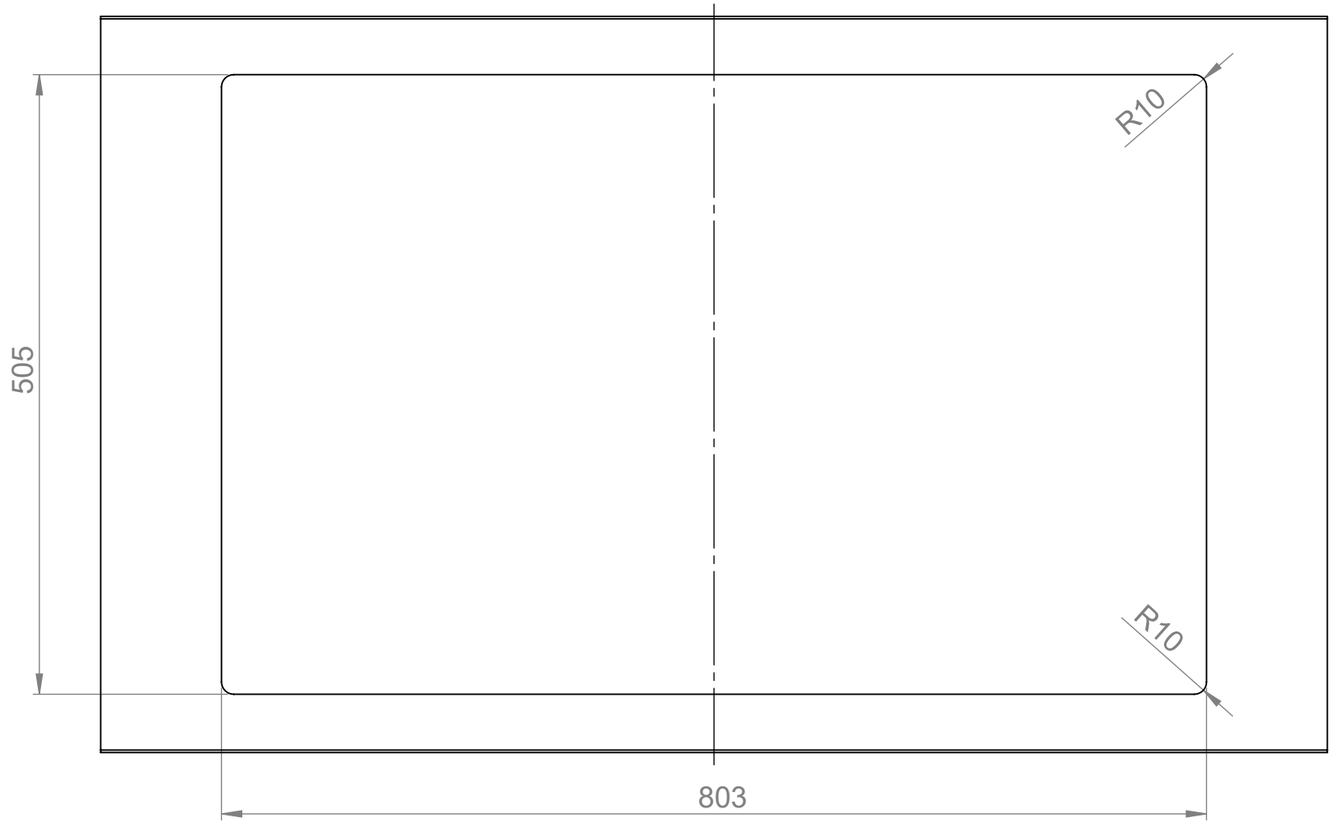

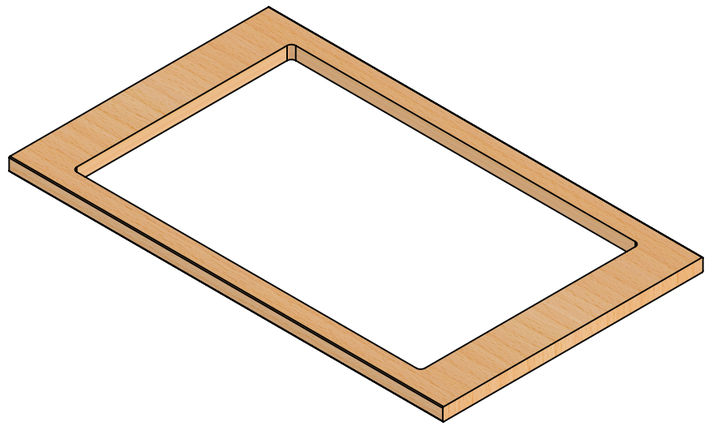
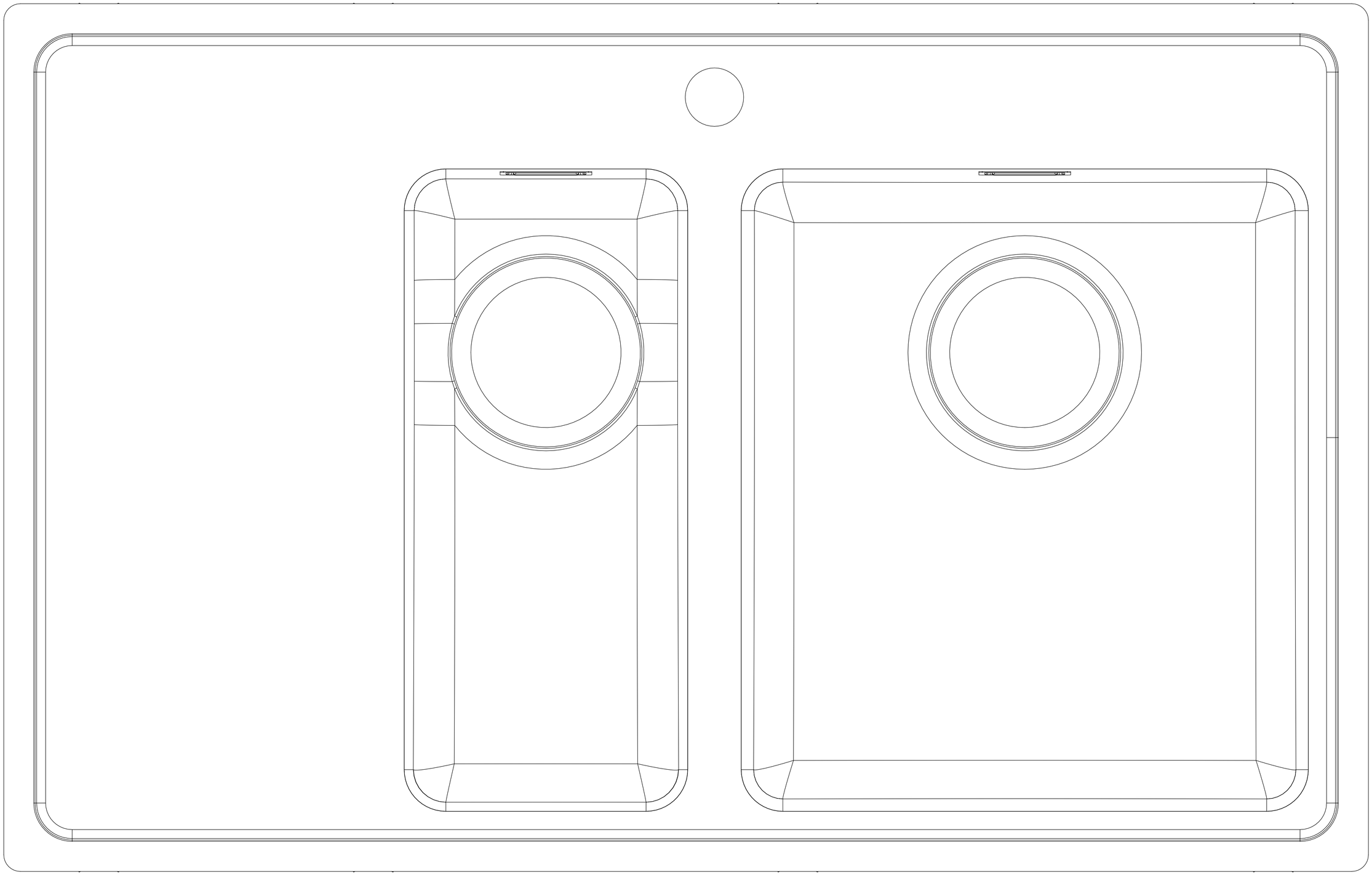
	Mass kg	General tolerance	Designed by PJ	Date 03.03.2023
	Size A3 / Scale 1:5	Item	Approved by VS	Date 09.08.2023
STALA Member of ALVEUS		Description ONE-TDL17-34 Technical Data Sheet	Drawing number 19611	Sheet/sheets 4/6
				Rev A