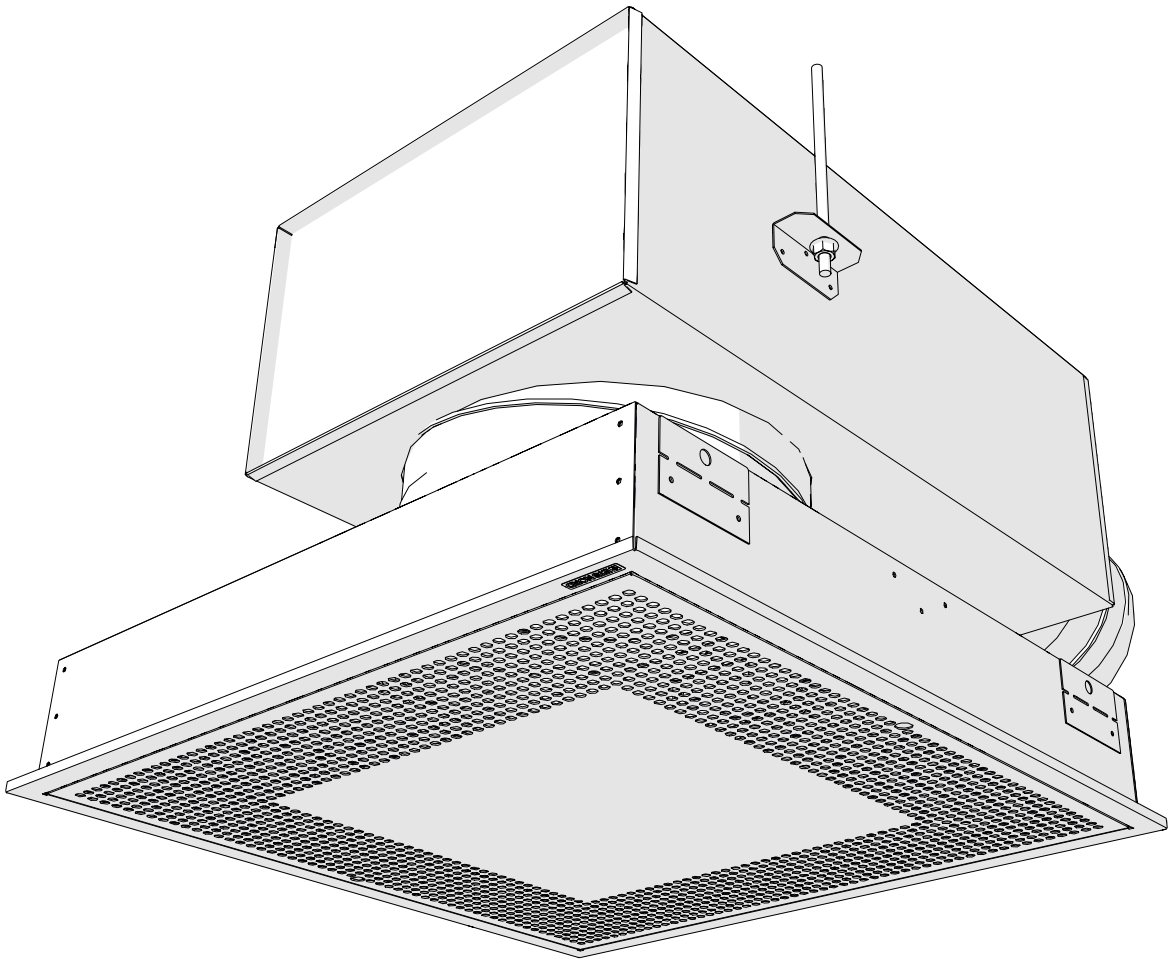

# NORDdiffuser

## DKU Installation manual

ETS NORD

# Installation manual

| Nominal-size | Ød | A | A1 | Weight, kg |
|---|---|---|---|---|
| 100-300 | 100 | 300 | 270 | 2,7 |
| 125-300 | 125 | 300 | 270 | 2,8 |
| 125-600 | 125 | 595 | 565 | 6,8 |
| 160-450 | 160 | 450 | 420 | 4,7 |
| 160-600 | 160 | 595 | 565 | 6,9 |
| 200-450 | 200 | 450 | 420 | 4,7 |
| 200-600 | 200 | 595 | 565 | 6,9 |
| 250-600 | 250 | 595 | 565 | 6,8 |
| 315-600 | 315 | 595 | 565 | 6,7 |

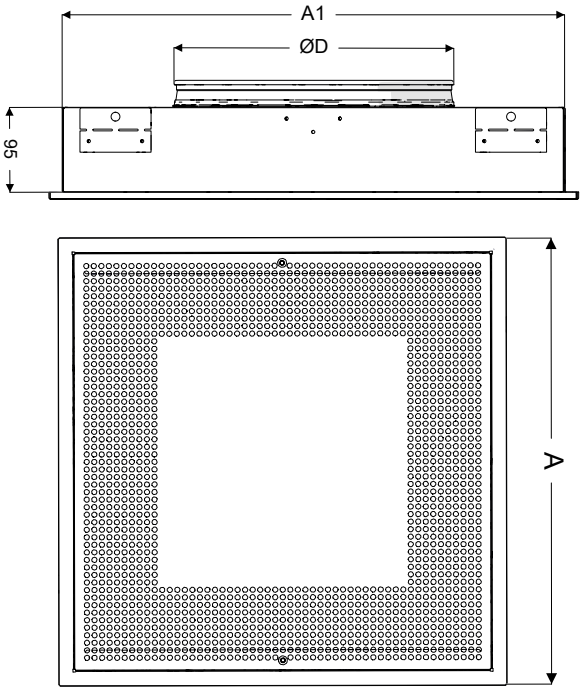


A

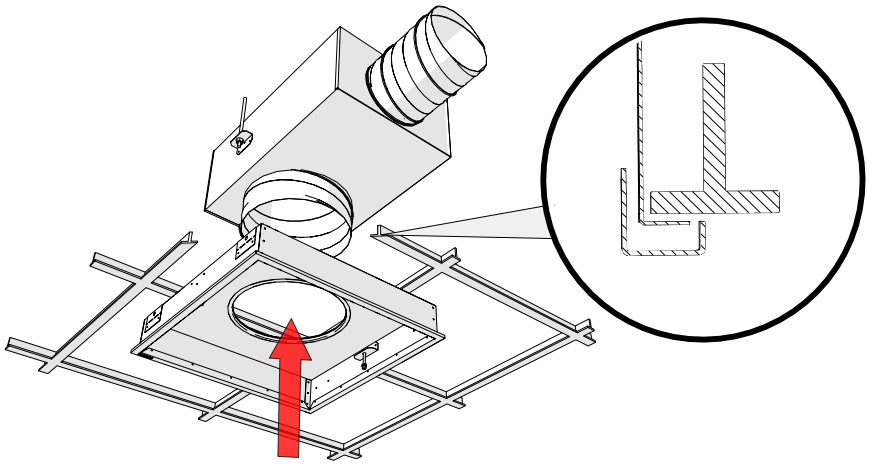

B

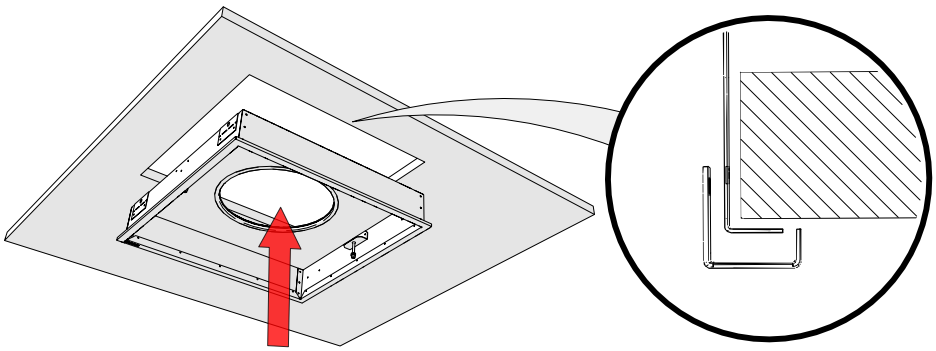

DKU + SKDM

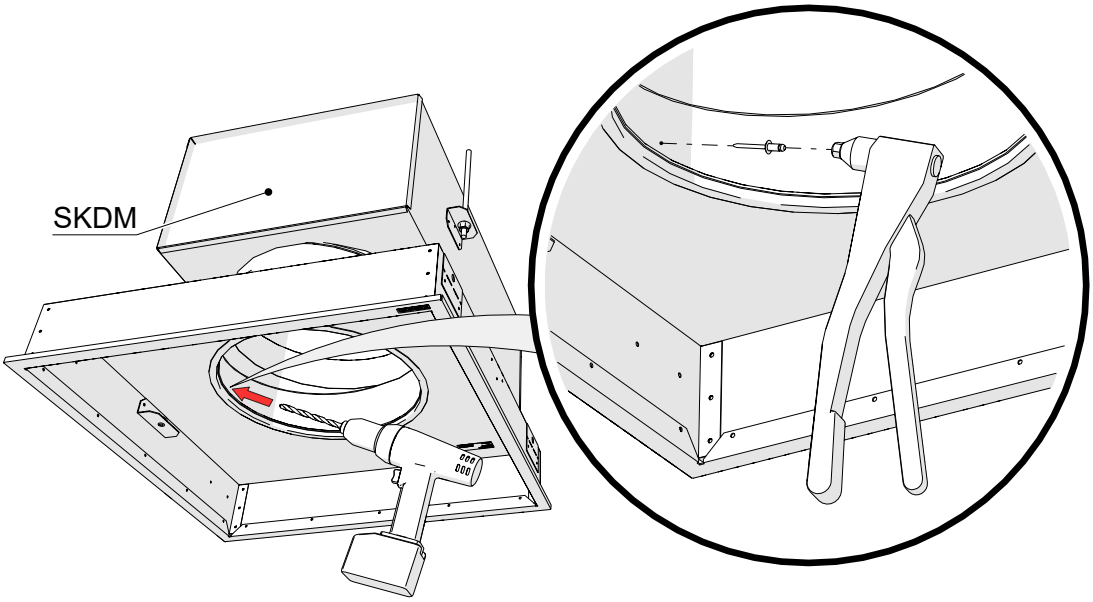


DKU + KRI

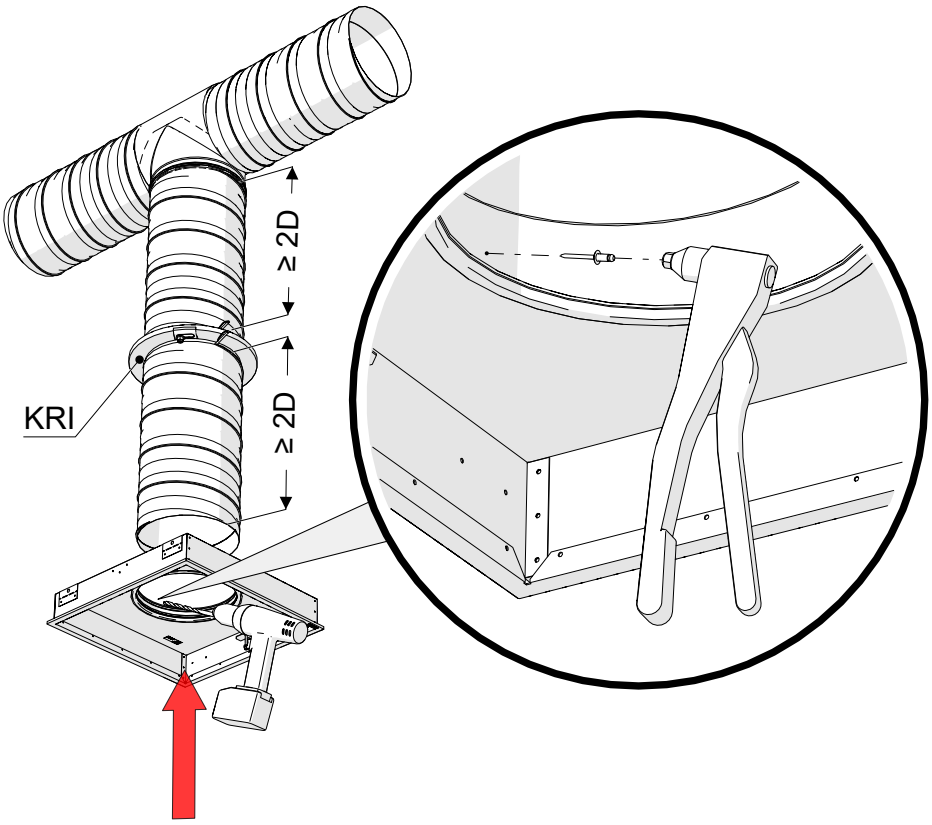

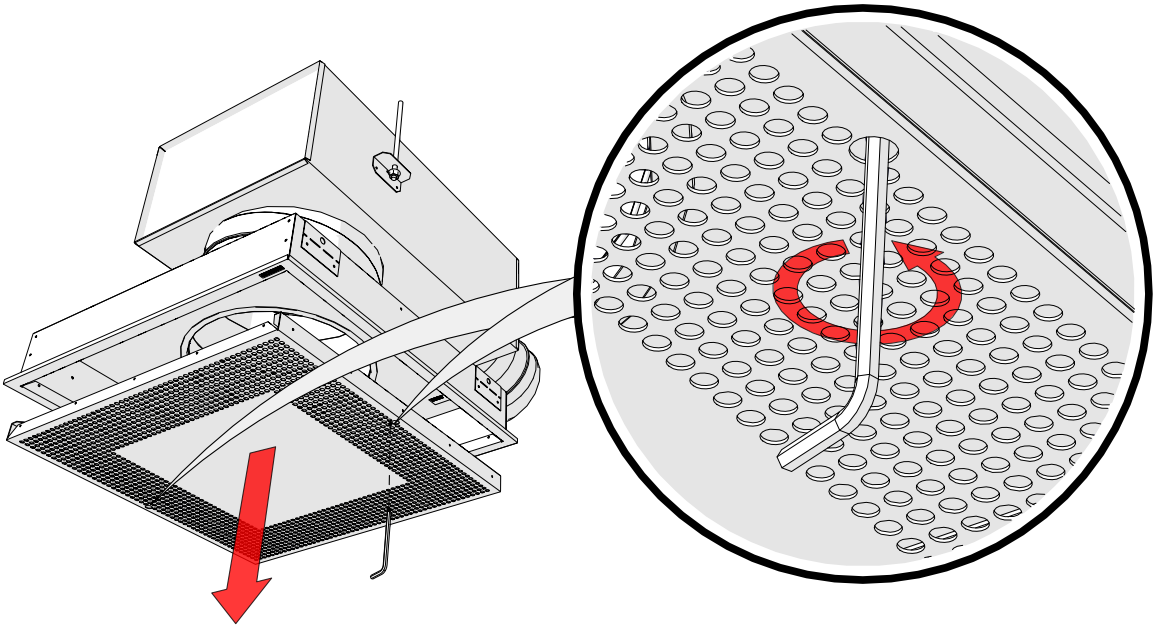

$Q_v = k * \sqrt{\Delta p_m}$
(l/s)

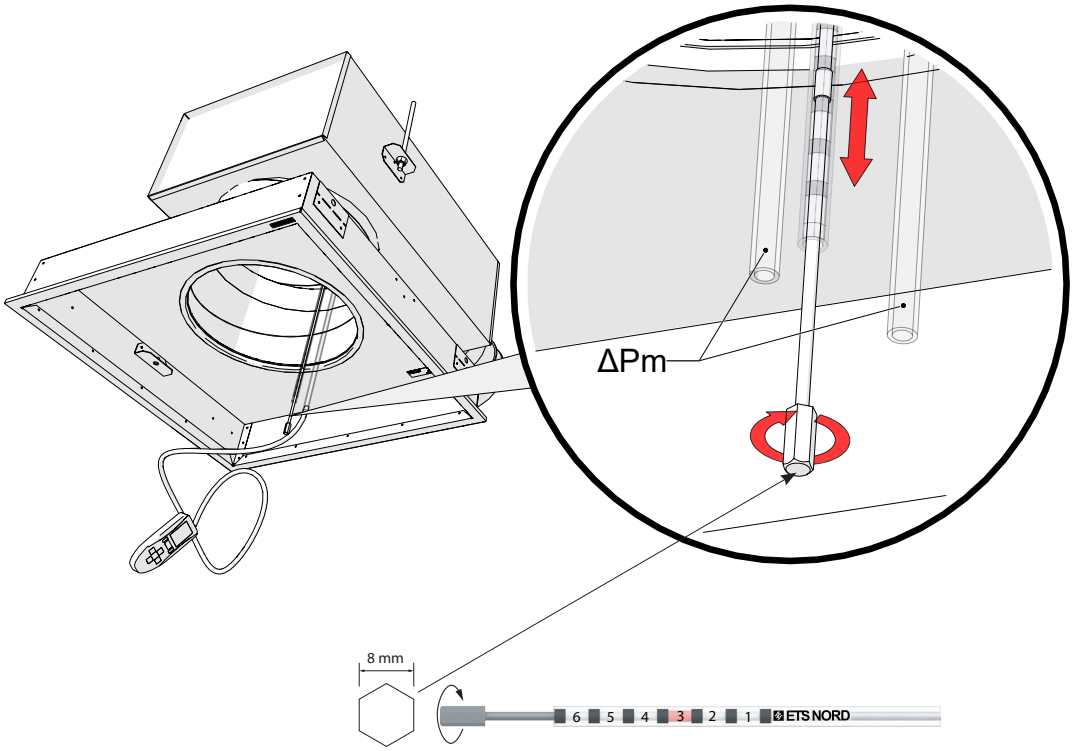

ETS NORD

## ETS NORD AS


Address: Peterburi tee 53
11415 Tallinn
Estonia

Phone: +372 680 7360

info@etsnord.ee
www.etsnord.ee


## ETS NORD Finland


Address: Pakkasraitti 4
04360 Tuusula
Finland

Phone: +358 401 842 842

info@etsnord.fi
www.etsnord.fi


## ETS NORD Sweden


Address: Järsjögatan 7
69235 Kumla
Sweden

Phone: +46 70 780 50 26

---

Address: Pinjegatan 5
21363 Malmö
Sweden

Phone: +46 40 94 68 70

info@etsnord.se
www.etsnord.se


*Let's move the air* ***together!***