STANLEY®
Security

D-4990 Low Energy Operator

Installation Guide

phi™
PRECISION

P/N: 06552-95 Rev A

Copyright ©2015 Stanley Security Solutions, Inc. and Stanley Logistics, Inc. All rights reserved. Printed in the United States of America.

Information in this document is subject to change without notice and does not represent a commitment on the part of Stanley Security Solutions, Inc. The software described in this document is furnished under a license agreement or nondisclosure agreement.

This publication is intended to be an accurate description and set of instructions pertaining to its subject matter. However, as with any publication of this complexity, errors or omissions are possible. Please call Stanley Security Solutions, Inc., at (317) 849-2250 if you see any errors or have any questions. No part of this manual and/or databases may be reproduced or transmitted in any form or by any means, electronic or mechanical, including photocopying, recording, or information storage and retrieval systems, for any purpose, without the express written permission of Stanley Security Solutions, Inc.

This document is distributed as is, without warranty of any kind, either express or implied, respecting the contents of this book, including but not limited to implied warranties for the publication's quality, performance, merchantability, or fitness for any particular purpose. Neither Stanley Security Solutions, Inc., nor its dealers or distributors shall be liable to the user or any other person or entity with respect to any liability, loss, or damage caused or alleged to be caused directly or indirectly by this publication.

Written and designed by Stanley Security Solutions, Inc., Indianapolis, Indiana.

P/N: 06552-95 Rev A CN00183 10/14

CONTENTS

1 CONTENTS

1 INSTALLING THE D-4990 LOW ENERGY OPERATOR

Introduction and benefits 1
Component/
block diagram 2
Cautions 3
Product support & service contacts 3
Installation overview 3
Typical application riser diagrams & wiring diagrams 4

Task 1: Prepare the installation 1–9
Minimum installation requirements 9
Installation tools required 9

Task 2: Mount the operator 1–11

Task 3: Mount the push plates or other actuators 1–16

Task 4: Attach arms 1–16

Task 5: Make electrical connections 1–18

Task 6: Make initial settings and adjustments 1–22
Checklist before turning on power 22
Turn on power 22

Door cycle stages 23
Check force and Kinetic energy 25
Potentiometers 25
Digital readout 27
DIP switch settings 27
Task 7: Complete the installation 1–29
Applying decals 29
Safety checks 1–30

2 IMPORTANT TERMS

1 INSTALLING THE D-4990 LOW ENERGY OPERATOR

Introduction and benefits

The Precision heavy-duty D-4990 Low Energy Operator is an electro-mechanical product designed to provide safe and convenient automatic access to elderly or physically impaired persons who require additional assistance.

Product features include:

- Because this is a 'low energy' operator, no guide rails or safety mats are required.
- Operates quietly, safely, conveniently, and reliably
- Electrically swings open up to 90 degrees
- Manually swings open up to 120 degrees on pull-side installations; and up to 180 degrees on push-side installations.
- Acts as a standard door closer in the event of a power failure
- Complies with Americans with Disabilities Act Title 3 (ADA) requirements
- Allows independent adjustment for
  - ▲ door opening speed
  - ▲ door opening force
  - ▲ hold-open time up to 30 seconds
- Complies with:
  - ▲ UL Listed for use on fire and smoke check doors
  - ▲ UL 325 Standard for Door, Drapery, Gate, Louver, and Window Operators and Systems.
  - ▲ UL 228 Standard for Door Closers-Holders, with or without Integral Smoke Detectors
  - ▲ Meets requirements for UL 10C and UBC 7.2 for positive pressure
  - ▲ Complies with Americans with Disabilities Act (ADA)

- ▲ ANSI/BHMA 156.19 certified standard for Power Assist and Low Energy Power-Operated Doors
- ▲ Complies with ANSI 117.1 section 4.13
- ▲ In compliance with FCC 47 CFR part 15 class B emissions requirements (USA)

- Monitors for obstructions during the opening cycle, ensuring safe access.
- Closes either with the built-in D-4550 hydraulic closer or with the added help of the built-in motor. This feature – power close – is especially helpful in windy conditions or in buildings where interior stack pressures build up. This feature can reduce energy use and cost.

Component/ block diagram

For a view of the entire D-4990 system and the relationships between components, see the diagram below. Shaded objects can be used in the system, but are optional for the system to work. Non-shaded items are required.

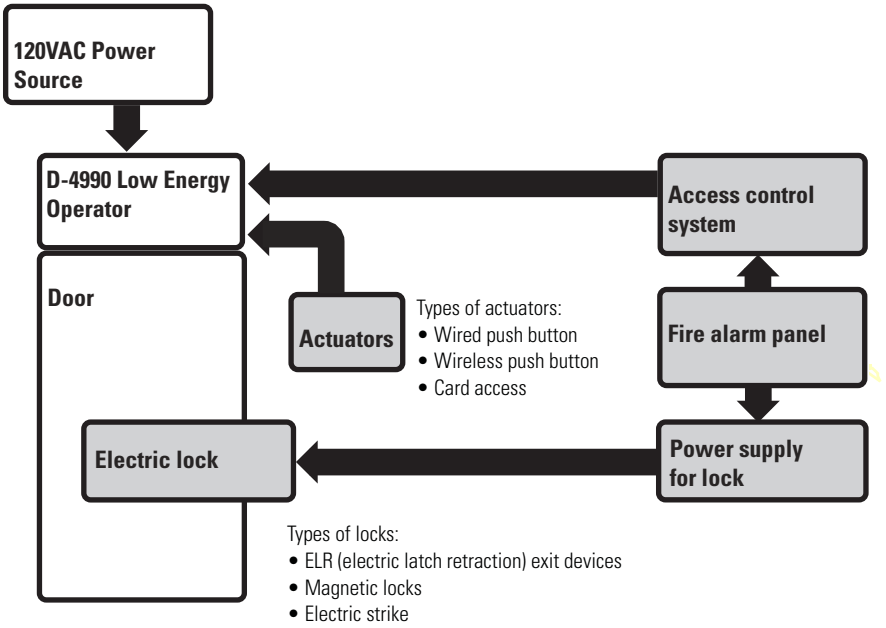

Figure 1.1 Block diagram showing the relationships to the components in the system. Shaded components are optional. Non-shaded components are required.

Cautions

Improper installation or regulation or adjustment may result in personal injury or property damage. Follow this instruction manual carefully.

Product support & service contacts

For product support contact your Stanley Precision factory representative.

Installation overview

Use this installation overview to help you prepare for all the stages of the installation. Follow the cross-reference pages to get the full details of that step.

1 Prepare the installation – Make sure that the door opening is fully ready to receive the D-4990 Power Operator, including power source and control wiring for the operator. See *Task 1: Prepare the installation on page 1-9*.

2 Install the operator – Install the operator to the door header. See *Task 2: Mount the operator on page 1-11*.

3 Install the actuators – Install the push plate, card readers or other actuators. See *Task 3: Mount the push plates or other actuators on page 1-16*.

4 Install the operator arms – Install the arms to the door operator and door. See *Task 4: Attach arms on page 1-16*.

5 Make all wiring connections – Make all power, switch, and output lock device wiring connections. See *Task 5: Make electrical connections on page 1-18*.

6 Make initial settings and adjustments – Set switches and make adjustments for backcheck, closer speed, power close, hold open, door speed, door force, etc. See *Task 6: Make initial settings and adjustments on page 1-22*.

7 Complete the installation – Finalize the installation with testing, troubleshooting, applying decals, and final inspections. See *Task 7: Complete the installation on page 1-29*.

Typical application riser diagrams & wiring diagrams

Simple door operator with inside and outside actuators

- Doors locked during off hours with mechanical lock only.
- One actuator switch operates the door from the outside.
- A second actuator switch operates the door from the inside.

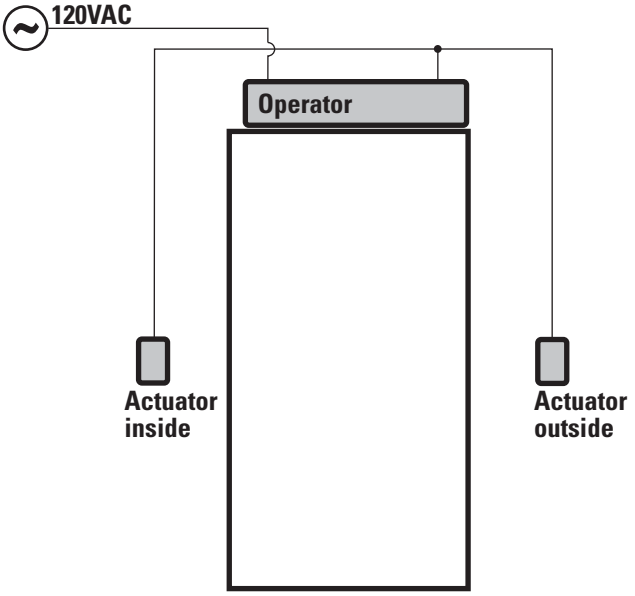

Figure 1.2 Riser diagram showing a single door with an operator and no electric locking device.

Use the following diagram to wire this application.

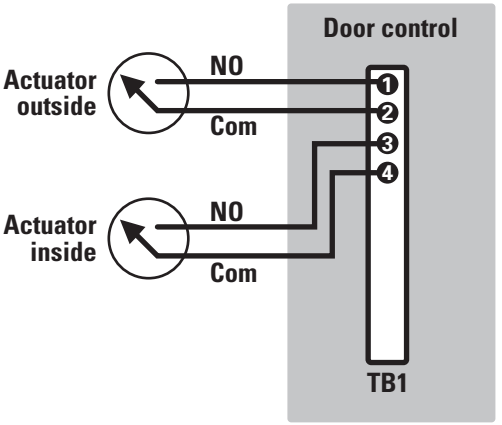

Figure 1.3 Wiring diagram for simple single door installation

Simple door operator with electric strike and inside and outside actuators

- Doors locked with electric strike.
- One actuator switch operates the door from the outside.
- A second actuator switch operates the door from the inside.

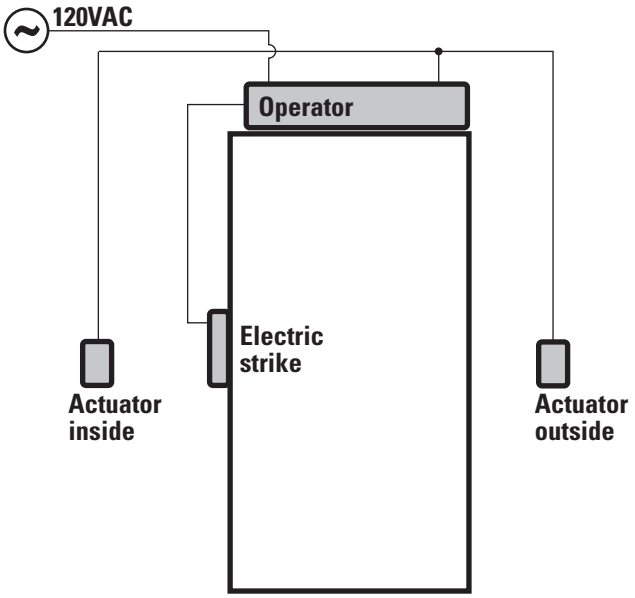

Figure 1.4 Riser diagram showing a single door with an operator and no electric locking device.

Use the following diagram to wire this application.

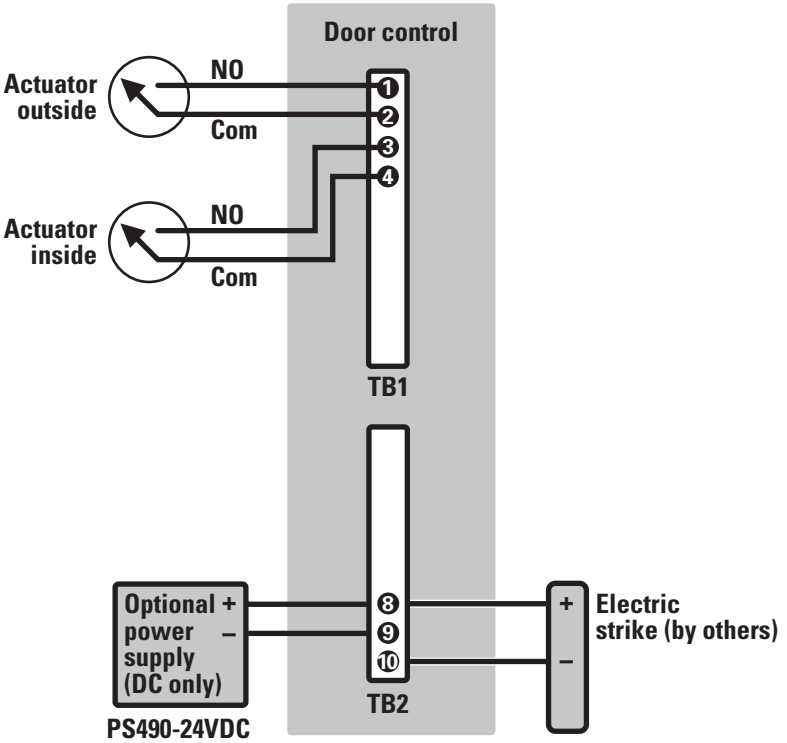

Figure 1.5 Wiring diagram for simple single door installation

Vestibule — Two single doors and operators with electric latch retraction

- Doors closed and latched at all times
- When activated, latchbolts retract and doors automatically open
- Two actuators outside of the vestibule operates the closest door first, then second
- One activator inside of the vestibule operates the closest door only.

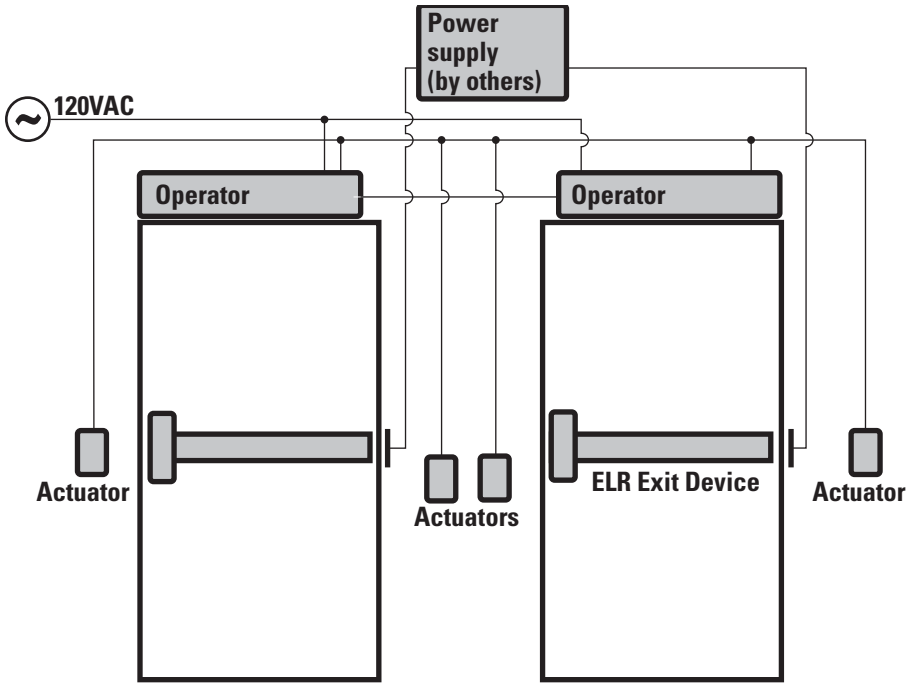

Figure 1.6 Riser diagram showing a vestibule having two single doors with operators and electric latch retraction exit devices

To wire the vestibule of this installation see See Figure 1.7 on page 1-8.

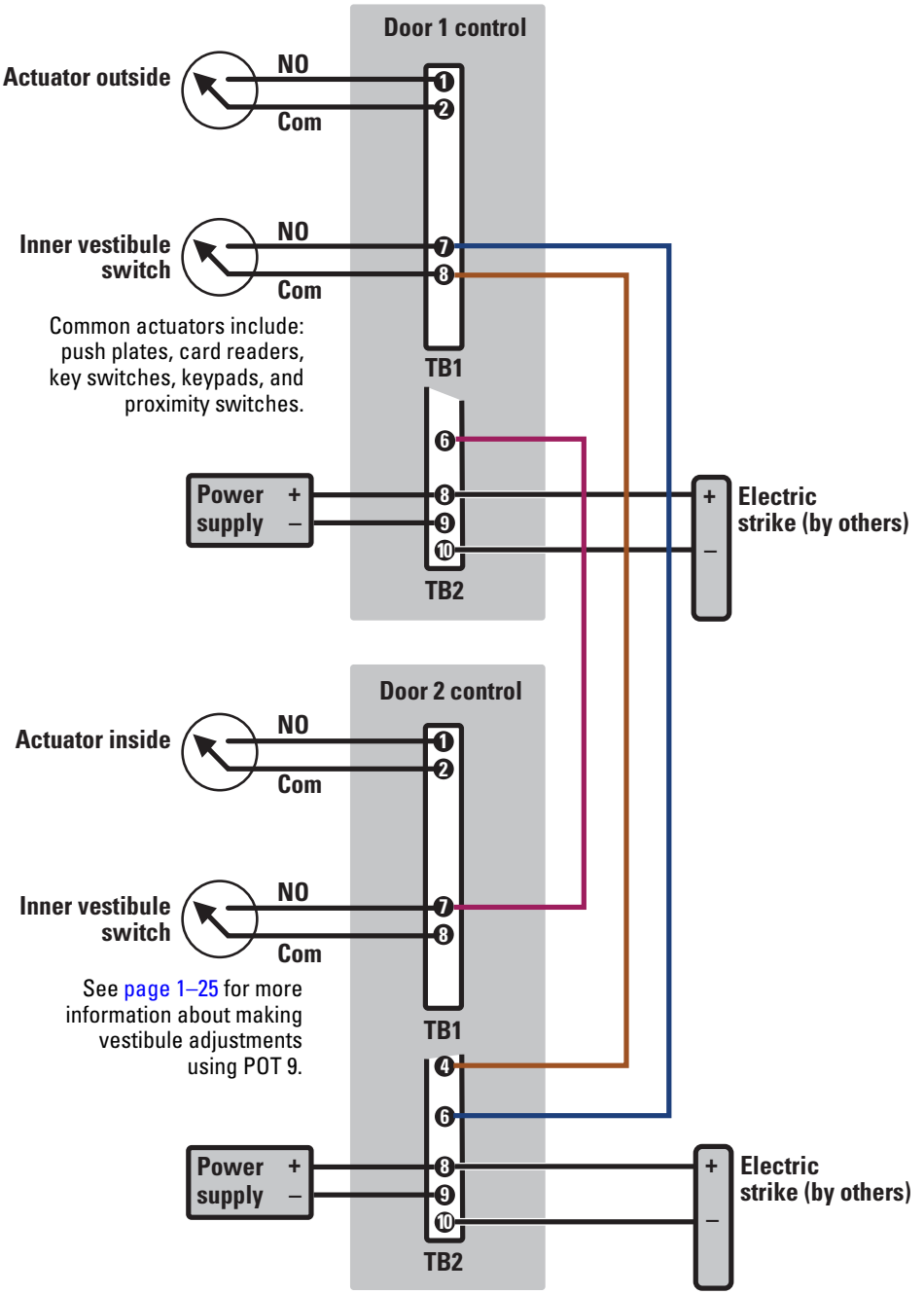

Figure 1.7 Wiring diagram for vestibule installations

TASK 1: PREPARE THE INSTALLATION

Minimum installation requirements

- The D-4990 must be mounted on the interior side of the building.
- The door can weigh no more than 350 lb.
- The door can be no more than 48 in. wide.
- If there is a manual closer, it must be removed or made inoperable.
- The door must be in good working order. The hinges must work properly; the door must swing freely through its entire range.
- The frame must be made of 16 gauge welded steel or better; or the mounting surface must be masonry; or additional support must be provided behind the operator (see Figs 5 and 6).
- For an outswing door, the reveal must be in the range 0 – 6 5/8 in. For an inswing door the reveal must be 0 in.
- Power for the D-4990 should be installed before starting the installation of the operator.

Follow these instructions to prepare the door opening for the power operator installation. Ignore those preparations that don't apply.

Installation tools required

You will need the following tools to install the D-4990 Low Energy Operator:

- digital stopwatch
- force gauge
- Phillips screwdriver
- small flat-blade screwdriver
- center punch
- hammer
- tape measure
- diagonal cutters (wire strippers)
- step ladder
- electric drill
- assorted drill bits
- adjustable wrench
- carbide drill bits if the operator is being attached to a masonry surface.

To prepare the installation

1. Make note of the environmental limitations of the power operator and make sure that your application does not exceed those limits. The D-4990 is intended for indoor/controlled environmental operation only.

Specification	Rating
Relative humidity	5% to 95% non-condensing
Operating linebreak temperature	0 to +100°F

2. Pull all power, data, and switch wiring to the opening in either concealed or non-concealed applications. See the wiring diagrams beginning on page 1-4 for details. Observe the following wire specifications:

Electrical specifications

Specification	Rating
Voltage	115 Volts AC ±15%, 60 Hz
Max current	5 Amps
AC power for wire less receiver	24 VAC @ 0.125 Amps

Wire type	Specification
Power	16 AWG

3. If your application requires electric latch retraction exit devices or electric strikes, install the required separate power supply. An optional 24 volt, 0.5 amp power supply is available to field install inside the D-4990 Low Energy Power Operator. See the installation instructions that came with the optional power supply.



Disconnect power before installing the operator!
A WARNING indicates a potentially hazardous situation which, if not avoided, could result in death or serious injury.

4. Unpack the unit from the carton. For a standard D-4990 Low Energy Operator you should have the following components:
   - ▲ Low energy operator
   - ▲ Operator arms
   - ▲ Mounting hardware package
   - ▲ Adjustment screwdriver
   - ▲ Back plate mounting template
   - ▲ Arm mounting template
   - ▲ Door decals

▲ This manual

Optional equipment that you may have:

▲ Power supply for electric strike

TASK 2: MOUNT THE OPERATOR

Now that you have prepared the opening, you're ready to mount the operator unit itself. Follow these steps to mount the operator.

PUSH, outswing mounting

To mount the operator on an outswing door

1. Determine the handing and side of the door. The D-4990 mounts to right-hand reverse bevel (RHRB) and left-hand reverse bevel (LHRB) doors. The D-4990T (track) mounts to right hand (RH) and left hand (LH) doors. See Figure 1.8 on page 1-11.

   Note: The operator must be installed on the inside of the door.

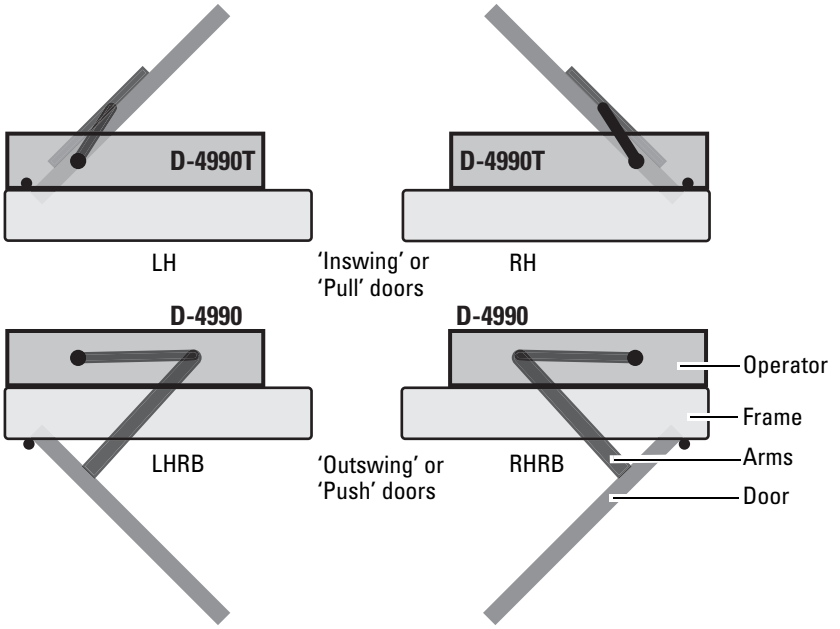

Figure 1.8 Diagram showing how the D-4990 and D-4990T mount to the four door swings

2. Make sure to place the hinge side of the template to the hinge side of the door. See Figure 1.9.

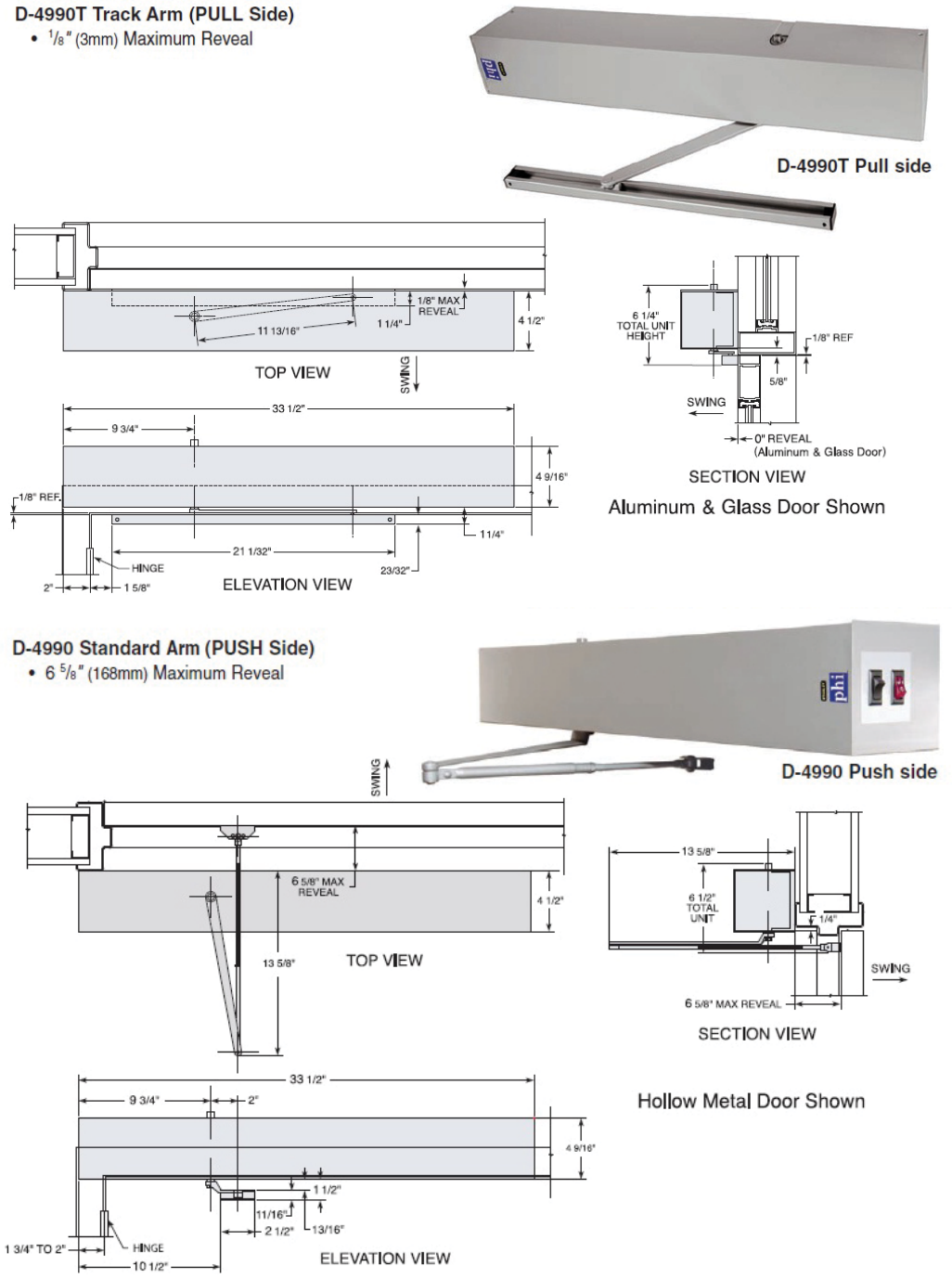

Figure 1.8.1 Standard Applications

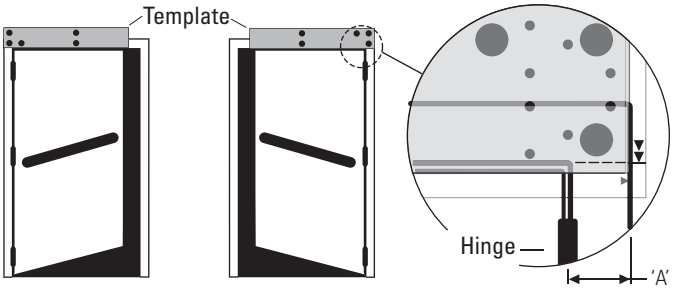

Note: Applies for all standard hinges. For special hinges (swing-clear, or other) and offset pivots, consult your authorized dealer.

Push-side mount:
'A' = 1¾ to 2"

Figure 1.9 Aligning the template to the door frame

3. Make sure that the mounting surface is clean, flat and structural. Modify the door and frame as necessary.
4. Make sure that a minimum clearance height of 6 3/4" (172 mm) from ceiling to door mounting surface is unobstructed. See Figure 1.10 on page 1-13.

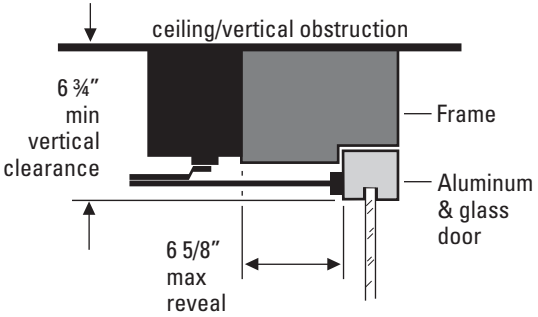

Note: Pull side clearance 6-1/2", push side clearance 6-3/4".

Figure 1.10 Side cut-away view of an aluminum and glass door showing the maximum reveal. Also this view shows the minimum vertical head clearance.

5. Tear along the perforated edges of the template.
6. Peel off the adhesive strips from the back of this template and carefully place it in position on the frame by aligning the edges of template to the edges of the door frame. See Figure 1.9 on page 1-13.
7. Peel off the adhesive strips from the back off the Arm Template and carefully place it in position on the door as shown in See Figure 1.11 on page 1-14. Follow the instructions on the arm template.

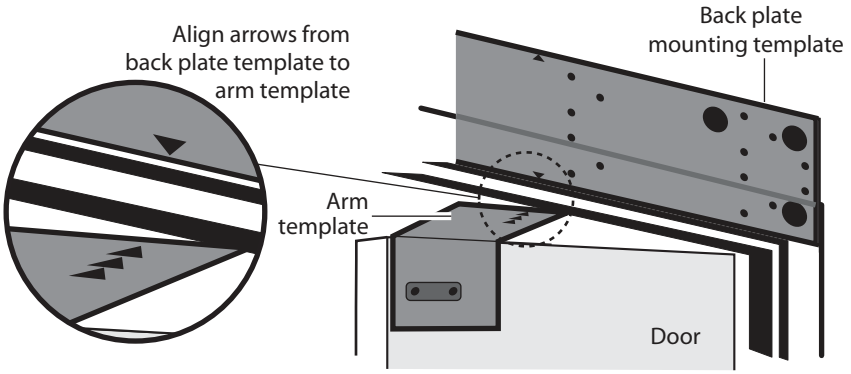

Figure 1.11

8. Mark for drilling a minimum of six mounting holes on the base. Make sure to use mounting holes at each end and in the middle of the base. There are a total of 22 mounting holes to choose from.
9. Mark for drilling conduit if needed.
10. Drill and tap the mounting holes. Use a #7, or 13/64" (0.201") drill and ¼"–20 tap for the mounting screws. Remove the templates.
11. Remove the cover screws and slide off the cover from the operator housing. See Figure 1.12.

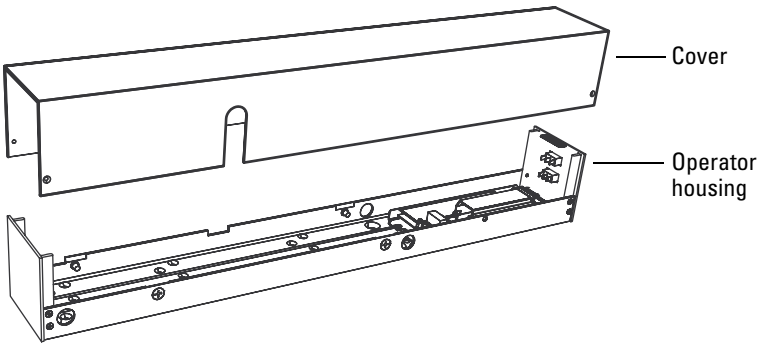

Figure 1.12 Removing the cover from the housing

12. Remove the motor/closer assembly.

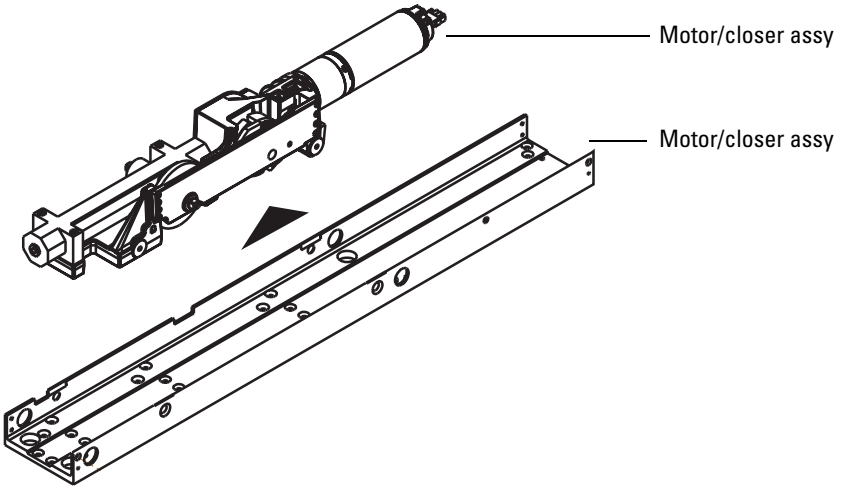

Figure 1.13 Removing the motor/closer assembly from the housing

13. Mount back plate to the door frame using at least six 1/4-20 screws. See Figure 1.14 on page 1-15.

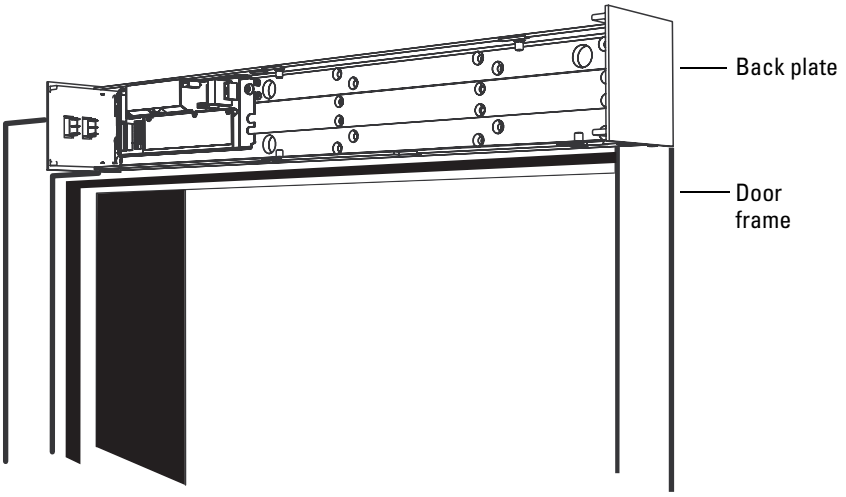

Figure 1.14 Mounting the back plate to the frame

Caution

Caution: Do not drill through the door and do not drill using the back plate as a template: metal shavings or other debris could foul or short the electronics.

14. Route power and control wiring to the back plate.

15. Reinstall motor/closer assembly. Make sure that the harnesses are not trapped behind the motor/closer assembly. See Figure 1.13 on page 1-15.

TASK 3: MOUNT THE PUSH PLATES OR OTHER ACTUATORS

The type of actuator that you are installing will determine the installation procedures. See the manufacturer's instructions that came with the product.

Make sure to follow the ANSI/BHMA 156.19 requirements regarding the placement of actuators:

ANSI/BHMA 156.19 requires that the actuator switch:

- " . . . be activated by a *knowing act*." See the glossary of terms for a complete definition, but in summary, the operator must be activated consciously. It must not open without the person's initiating.
- be located within one to five feet from the door, but never more than 12 feet.
- must remain accessible from the swing side when the door is opened.
- not be located in a position where the user would be in the path of the moving door.
- be mounted so the user is in full sight of the door when activating the switch.
- have an installation height of a minimum of 34 in (864 mm) and a maximum of 48 in (1219 mm).

Types of actuators include:

- push plates
- card readers
- key switches
- keypads
- proximity switches
- For information on how to wire the actuators to the D-4990 Low Energy Operator, See *Typical application riser diagrams & wiring diagrams on page 1-4*.

TASK 4: ATTACH ARMS

There are two types of arms available for the D-4990 or D-4990T Low Energy Operator:

- Standard, push arms
- Track or parallel arms. These arms ship with the D-4990T series operator.

Your application will determine the type of arms that you will install.

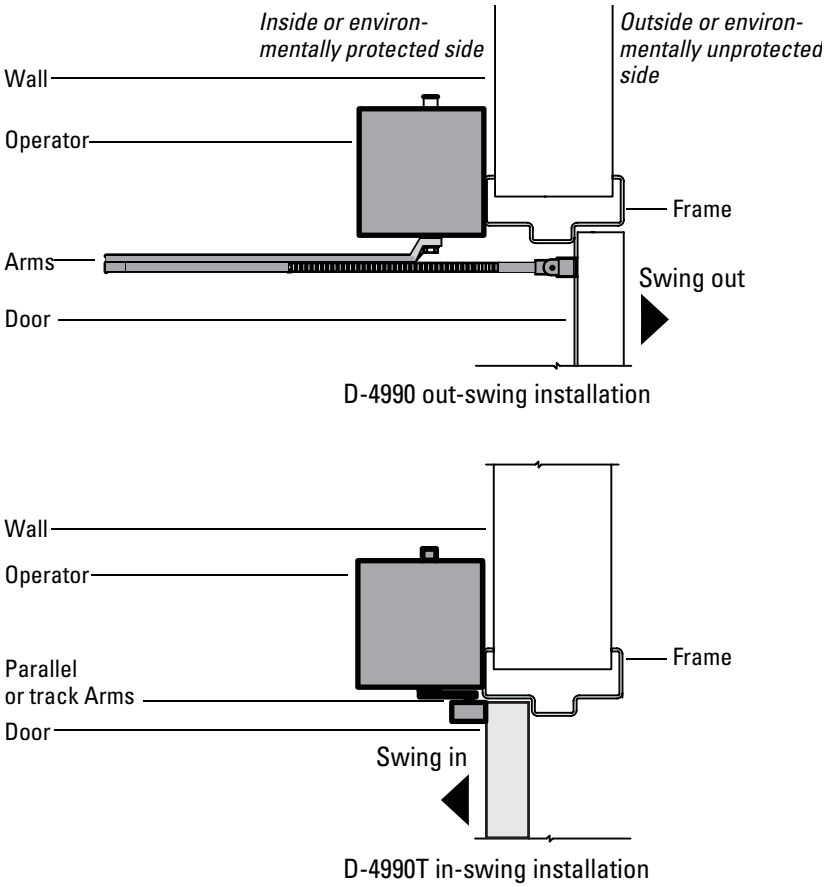

Figure 1.15 Comparing the two types of installations

Standard or outswing arm installation

1. If you've not done so already, use the arm template to locate the holes that will mount the arm to the door. Follow the instructions on the template.
2. Drill and tap the mounting holes. Use a #17 or 11/64″ (0.173″) drill and 12-24 tap for the mounting screws. Remove the template.
3. Attach the main arm to the operator.
4. Attach the bottom arm to the door.
5. Connect the main arm to the bottom arm.

Track or in-swing arm installation

1. If you've not done so already, use the track arm template to locate the holes that will mount the arm to the door. Follow the instructions on the template.
2. Drill the holes. If you're using the screws provided:

   Qty 2 of #12/L pan-head tapping screw, or

   Qty 2 of #12-24 UNC/L pan-head machine screws – use #17 (0.173") drill size
3. Attach the main arm to the operator.
4. Attach the track to the door.
5. Attach the roller to the arm and set into the track as shown in.

TASK 5: MAKE ELECTRICAL CONNECTIONS

Wiring overview

The wiring connections that you need to make will depend on your application. For sample wiring diagrams, see See *Typical application riser diagrams & wiring diagrams on page 1-4*.

For concealed wiring, route all wires through the back plate.

Make connections in the following order:

1. Input connections – actuators, keypads, etc.
2. Output connections – electric strike, ELR exit devices, etc – if necessary
3. AC power connections

Use the following diagram and table to identify the wiring connections that you need.

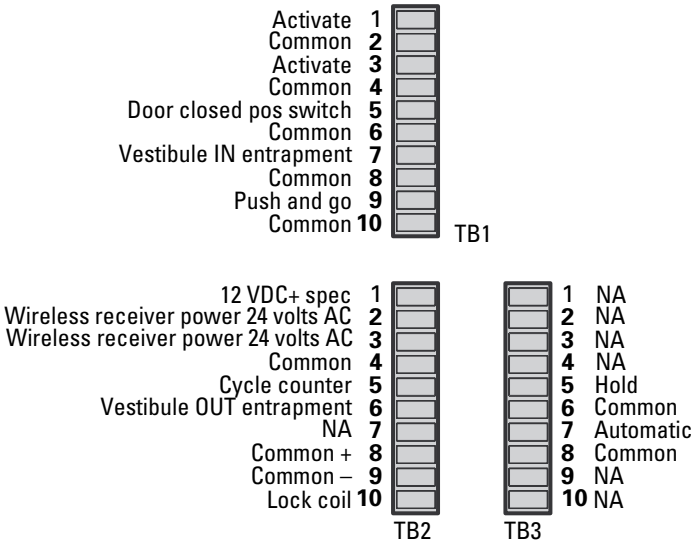

Figure 1.16 Identifying the TB connectors

Conn	TB1 | Use to wire . . .	TB2 | Use to wire . . .	TB3 | Use to wire . . .
1	Activation switch (push plate, keypad, etc)	A 12 volt DC, 00 amp power supply.	Not used.
2	Common wire from the switch	Wireless Receiver AC Power 24 VAC	Not used.
3	Activation switch	Wireless Receiver AC Power 24 VAC	Not used.
4	Common wire from the switch	Common wire from the Vestibule OUT Entrapment activation switch.	Not used.
5	Door closed position switch from the D-4990.[a]	Cycle counter.*	Door hold open switch.*
6	Common wire from the door closed position switch.*	Activation switch located inside the vestibule and used to open the first door going out.	Common wire from the door hold open switch.*
7	Activation switch located inside the vestibule and used to open the second door going inside.	Not used.	Not used.

Conn	TB1 | Use to wire . . .	TB2 | Use to wire . . .	TB3 | Use to wire . . .
8	Common wire from the activation switch located inside the vestibule.	Electric strike or lock power supply voltage. Also, positive wire from the lock.	Common wire from the automatic switch wire.
9	'Push and go' door switch.*	Common wire from the electric strike or lock power supply.	For future use
10	Common wire from the 'Push and go' door switch.*	Negative wire from the lock.	For future use.

a This switch wiring comes from the factory already wired.

Make input connections

1. Locate the TB1 connector. See Figure 1.17.

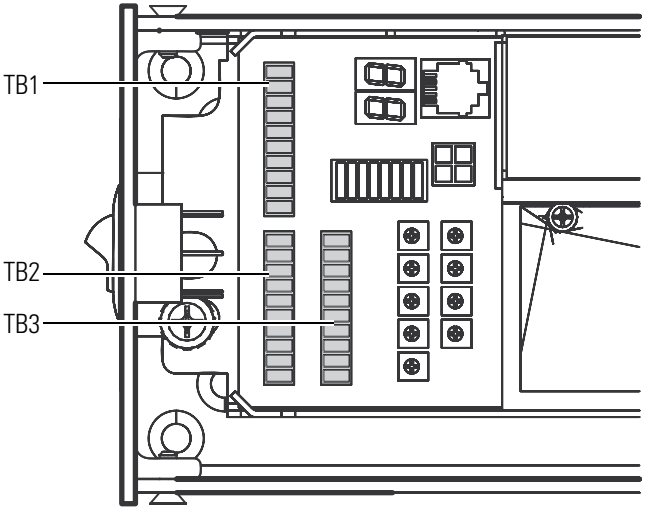

Figure 1.17 Front view of the connector board

2. Remove the connector header from its base if not already removed. This may make wiring easier.
3. Splice the wires from the actuator to the actuator wiring that is already wired into TB1 connector.
4. Plug the TB1 connector into the header on the circuit board.

Make output connections

If you are using an electric strike, ELR exit device, or other electric locking device, follow these steps. If not, you can skip to Make power connections on page 1–21.

1. Locate the TB2 connector. See Figure 1.17.
2. Remove the connector plug from itsocket. This may make wiring easier.
3. Strip and connect the wires from the lock into TB2 connector.
4. Plug the TB2 connector back into the header on the circuit board.

Make power connections

Make sure that all power is off before making connections.

1. Locate the TB1 connector. See Figure 1.17.
2. Remove the connector plug from its header if it's not already removed. This may make wiring easier.
3. Strip and splice the wires from the power source. Mate all white wires from J6 and switches together. Mate the black (hot) wires together. Terminate the ground screw.

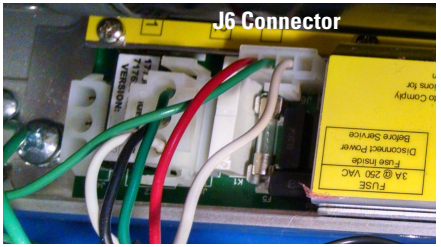

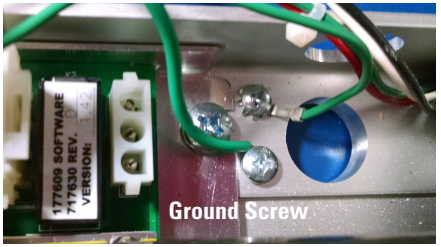

4. Mate the motor connector plug to motor socket 1. See Figure 1.18.

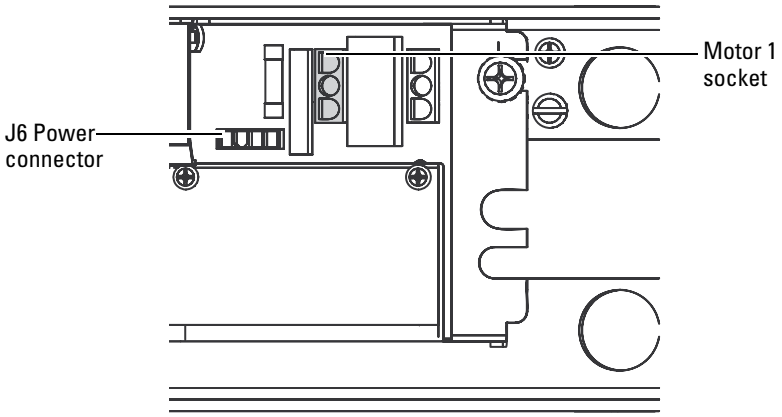

Figure 1.18 Front view of the back plate showing motor connector 1

TASK 6: MAKE INITIAL SETTINGS AND ADJUSTMENTS

In most cases, the D-4990 Low Energy Operator comes factory pre-set to suit most application requirements. But expect to make some minor adjustments.

Checklist before turning on power

Use the following checklist before making adjustment:

- ❑ All hardware installed
- ❑ All electrical wiring connections made and properly terminated; make sure no wiring is exposed.
- ❑ Cover removed
- ❑ Door closed and unlocked
- ❑ Door path clear

Do not turn on power until all wires are properly terminated and the unit is firmly affixed to the door and frame.

Turn on power

1. Turn the unit on by pushing the lighted switch to the ON position. See Figure 1.19.

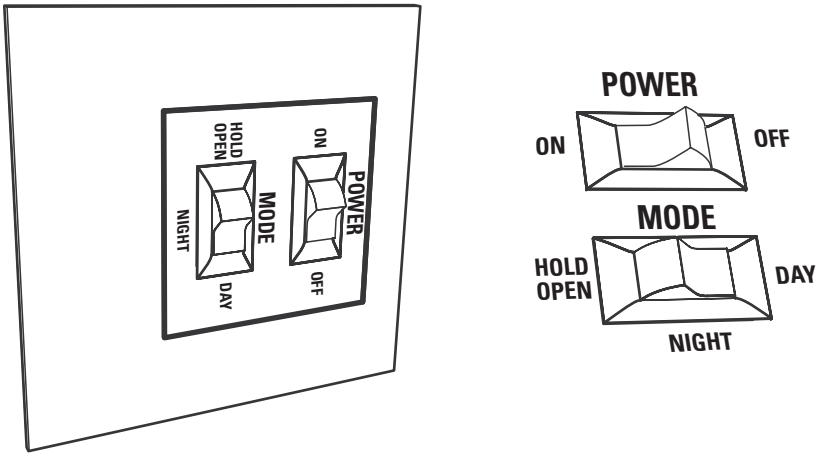

Figure 1.19 Power and mode switches shown set to normal operation

2. Move the mode switch to DAY.

As soon as power is applied, the unit will go through a first-time, self-test cycle. After a 30-second delay the unit will report any errors it finds via the digital readout. See page 1–27.

You can also use the test button in place of an actuating device to force the operator through its normal cycle. See page 1–26.

Door cycle stages

The door goes through five stages in one complete cycle, depending on the application. See Figure 1.20. They are:

A Opening from closed to back-check

B Back-check to full open

C Full open hold time

D Hold time to latch-check or 10 degrees

E Latch-check or 10 degrees to close

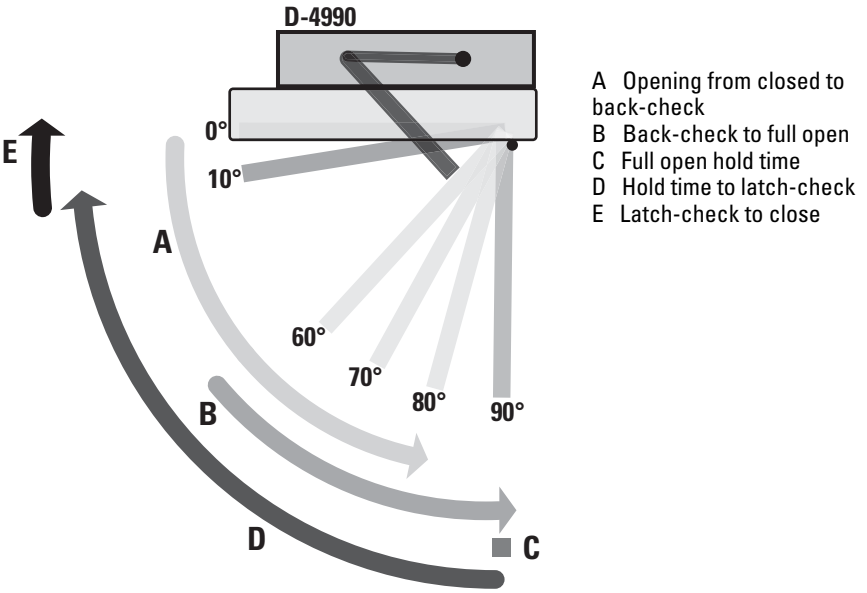

Figure 1.20 View showing the stages of the cycles

To determine the minimum (fastest) opening times, follow these steps

1. Determine the width and weight of your door. If you cannot weigh the door, use the following table to find its approximate weight:

Type of door	Weight per sq. ft.	Typical 3' × 7' door weight
• Solid core wood • 20 ga flush hollow metal • Aluminum × 1/4" glass	5.5 lbs	115 lbs
• Mineral core wood • 16 ga flush hollow metal • Aluminum × 1" glass	7.0 lbs	147 lbs

For example, you have a solid core wood door, 3 feet wide by 8 feet tall:

3 feet × 8 feet = 24 ft^2 >> 24 ft^2 × 5.5 lbs/ft^2 = **132 lbs**

2. Determine the minimum (fastest) opening time 0 to 80 degrees using the number that you computed above and Table 1. *The minimum opening time for any door is 3 seconds*.

   So for the example above of a door estimated to weigh 132 lbs with a 36 inch width, you would use the 150 lb maximum requirement of 3.5 seconds as the minimum amount of time (fastest) that the door could open or close.

Table 1 Minimum **opening time** *to back check or 80 degrees (whichever occurs first) and*
Minimum **closing time** *from 90 degrees to latch check or 10 degrees (whichever occurs first)*

Max door weight in pounds (lbs)	Door width in inches			
	30 in	36 in	42 in	48 in
100 lbs	3.0 sec	3.0 sec	3.5 sec	4.0 sec
125 lbs	3.0 sec	3.5 sec	4.0 sec	4.5 sec
150 lbs	3.0 sec	3.5 sec	4.0 sec	4.5 sec
175 lbs	3.0 sec	4.0 sec	4.5 sec	5.0 sec
200 lbs	3.5 sec	4.0 sec	4.5 sec	5.5 sec

3. Determine the minimum closing time, from 90 to 10 degrees or latch check, using the number that you computed above and Table 1. *The minimum closing time for any door is 3 seconds*.

   The minimum closing time from 10 degrees to fully closed *for any door* is 1.5 seconds.

4. Use the potentiometers, digital readout and spring adjustment to adjust the opening and closing times to be compliant to ANSI/BHMA 156.19.

The complete cycle time for a 132 pound door:

Door cycle stage	Cycle	Minimum time
A	Opening time to 80 degrees	3.5 seconds
B	80 degrees to full opening of 90 degrees	1 second
C	Hold open time delay	5 seconds
D	Closing time to 10 degrees	3.5 seconds
E	10 degrees to close	1.5 seconds
	Total minimum cycle time	*14.5 seconds*

Check force and Kinetic energy

Make sure that the door can stop and open with the minimum amount of force specified in ANSI/BHMA 156.19. To measure this, use a force gauge by putting it one inch from the latch edge.

1. Check that the door can stop using 15 lbf (foot-pounds) or less.
2. Check that the door can open (release the latch, that is, if there is a latch) with 15 lbf or less.
3. Check that the door can start opening (set the door in motion) with 30 lbf or less.
4. Check that the door can fully open with 15 lbf or less.

Potentiometers

Use the *potentiometers* on the electronics board to fine-tune the door operator. Each potentiometer or 'POT' allows you to isolate and adjust each movement of the door operator.

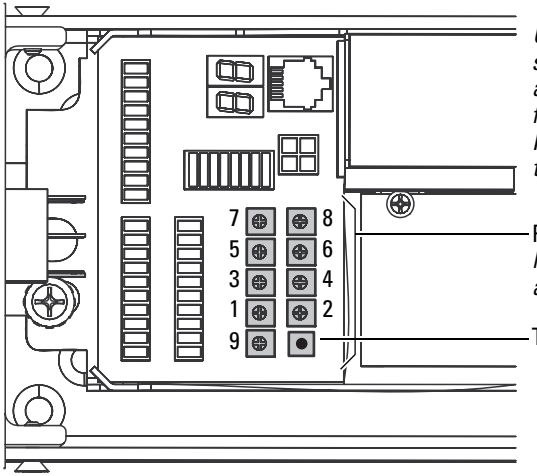

Use the adjustment screwdriver to make POT adjustments. The POTs are factory-set mid-way. Turn the POTS clockwise to increase time, speed, torque, etc.

Potentiometers
Note: POT 9 is arranged out of order

Test switch

Figure 1.21 View of the electronics board showing the nine potentiometers

Use the following table to make adjustments to door operation:

POT number	Used to adjust	Use this when . . .
1	Hold-open time	the time that the door holds open is too short or too long. Note: Hold open time can be up to 30 seconds. The hold open time must be a minimum of 5 seconds after the door is fully open.
2	Full open position	the door either does not open far enough or opens too wide.
3	NA (not used)	
4	Stall force	and only when hold open motor is drifting closed.
5	Open check speed	you need to set the door speed during the back check period. Make sure that the speed is compliant.
6	Open sweep speed	the speed that the door sweeps open is too fast or too slow.
7	Opening torque	the force of the opening is too strong or too weak. The door should stop when obstructed. It should not be difficult to stop the door by hand.

POT number	Used to adjust	Use this when . . .
8	NA (not used)	
9	Sequencer	the vestibule second door delay needs to be adjusted.

Digital readout

The digital readout is a diagnostic and adjustment tool that allows you to monitor the operator as it moves from one state to the next. Use this tool as you make adjustments.

Number	Operator state
01	Initialization
02	Door closed
03	Electric strike enabled (DIP switch 2; see the DIP switch table above)
04	Door moving open
05	Door moving through back-check
06	Full open or hold open
07	Door moving closed
08	Door obstructed (moving open only)

DIP switch settings

Six DIP switches define a feature's mode or enable or disable a feature. For example, your application may include locking and unlocking the door by an electric strike. In that case, you will need to enable the normally (factory-preset) disabled switch by flipping DIP switch 2 to ON. See Figure 1.22 to locate and help identify the DIP switches.

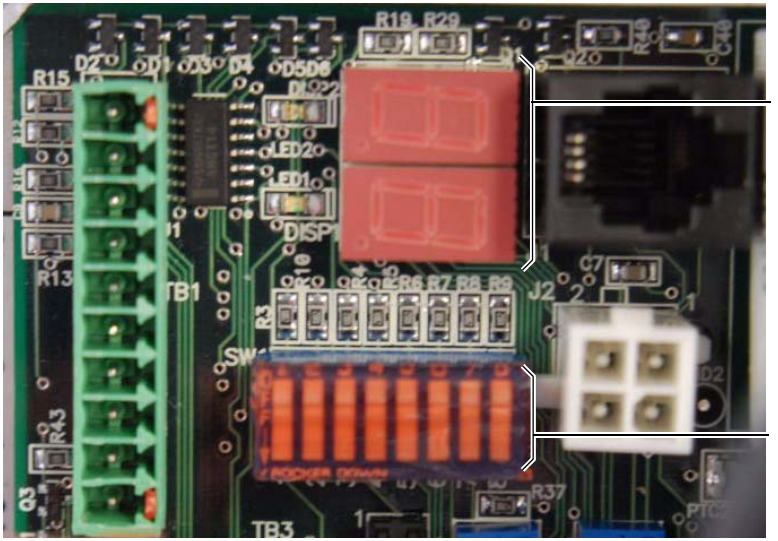

Figure 1.22 View of the electronic board showing the DIP switches and digital readout

The following table identifies the individual DIP switches and their factory default settings. All DIP switches are factory set to OFF. For a definition of terms, see the Glossary.

DIP switch number	DIP switch name	ON	OFF
1	Electric strike logic	Fail-safe	Fail-secure
2	Electric strike on/off	Enabled	Disabled
3	Out-swing/in-swing logic	In-swing	Out-swing
4	'Push and Go'[a]	Enabled	Disabled
5	Power close	Enabled	Disabled
6	Back-check length	NA	NA
7	Future use	NA	NA
8	Factory use only	NA	NA

a Push and Go, if enabled, will activate when door are pushed open past 10 degrees. This is activated by switch not motor voltage.

So if you . . .

- Have an *electric strike* or any kind of locking device, set DIP switch 2 to ON.
- Have an *electric strike* or any kind of locking device, set DIP switch 1 to ON for fail-safe (when power fails, the lock will be secure or locked) or leave it OFF for fail-secure (when power fails, the lock will be safe or unlocked).
- Have an *in-swing or pull door* (has a parallel arm), set DIP switch 3 to ON.
- Want to use the *Push and Go* feature that allows someone to simply push on the door to start the operator, set DIP switch 4 to ON.
- Want to use the *Power close* feature that forces the door closed in windy conditions or where stack pressures build inside a building, set DIP switch 5 to ON.

TASK 7: COMPLETE THE INSTALLATION

Before putting the door into operation, three more steps are required to complete the installation:

- Applying door decals
- Testing the door against the ANSI/BHMA 156.19 standard
- Reinstall the cover

Applying decals

For complete instructions on the placement of door decals, see the instructions packaged with the decals.

ANSI/BHMA requires that:

> "doors shall be equipped with signage visible from either side of the door, instructing the user as to the operation and function of the door. The signs shall be mounted 50″ ± 12″ (1270 mm ± 305 mm) from the floor to the center line of the sign. The letters shall be 5/8 inch (16 mm) high minimum."

and

> "All low energy doors shall be marked with signage visible from both sides of the door, with the words 'AUTOMATIC CAUTION DOOR'. . . .When a Knowing Act Switch is used to initiate the operation of the door operator, the doors shall be provided with signs on each side of the door where the switch is located, with the message 'ACTIVATE SWITCH TO OPERATE'."

and

> "When push/pull is used to initiate the operation of the door operator, the doors shall be provided with the message 'PUSH TO OPERATE' on the push side of the door and 'PULL TO OPERATE' on the pull side of the door."

SAFETY CHECKS

The following safety checks must be made daily to assure proper door operation:

- For safe operation, refer to the Daily Safety Check Sheet for safety procedures. If you need a copy, call your local PHI distributor.
- Test the doors daily and after any power outage. Verify operation of any sensors.
- Check the condition of the door, hinges, and safety decals.
- If there are any problems, DISCONTINUE DOOR OPERATION IMMEDIATELY! Notify your local authorized PHI distributor for repair.

2 IMPORTANT TERMS

The following are important terms that will help you better understand the D-4990 Low Energy Operator.

AAADM Abbreviation for the organization, *American Association of Automatic Door Manufacturers*. This organization has an inspector certification program that trains and certifies automatic door operator inspectors and technicians.

back-check A safety function that prevents or checks the door when a gust of wind or some other force tries to force the door to open too quickly, potentially damaging property or injuring people.

day mode Normal operational mode when all features are fully functional. See also *night mode*.

electric strike A locking device mounted in the door frame that electrically holds and releases a latch. 'Electric strike' the term can also be used generally for any kind of electrical locking device.

encoder Combination of a magnet rotating on the shaft at the end of the motor, and Hall effect transistors that send pulses to the control every time the motor turns. When the door is powered up it will open slowly and allow the encoder and processor to count the pulses from fully closed to fully open. These pulses are used to indicate when a door should go into back-check or when it's at its open limit.

fail-safe An automatic switching feature of an electrified lock that ensures that the security device unlocks when power fails and until power is restored. See also fail-secure.

fail-secure An automatic switching feature of an electrified lock that ensures that the security device locks when power fails and until power is restored. See also fail-safe.

hold-open time The time in seconds that the door remains open at 90 degrees. The minimum hold-open time is 5 seconds, the maximum is 30 seconds.

knowing act According to ANSI/BHMA 156.19: "Consciously initiating the powered opening of a low-energy door using acceptable methods including: wall or jamb-mounted contact switches such as push plates; fixed non-contact switches; the action of manual opening (pushing and pulling) a door; and controlled access devices such as keypads card readers, and keyswitches."

mode switch Controls Hold Open and operating mode (Day or Night). See *Day mode* and *Night mode*.

night mode Mode in which all actuators are not operational, except the push to open feature remains active.

power close The optional feature designed to ensure that the door completely latches closed, normally used in conditions where wind or stack pressures could prevent the door from closing.

'POT' See *potentiometer*.

potentiometer A variable, adjustable resistor used to vary the amount of current that flows to a device.

reveal The distance from the mounting surface of the operator to the face of the door.

sequential operation An automatic feature that provides for sequential operation of two units. For example, in a vestibule the opening of the second unit can be delayed 1 to 30 seconds after the opening of the first.

stack pressure A force on the door, created by an internal air handling system or external environmental conditions.

vestibule See *sequential operation*.

Notes:

P/N: 06552-95 Rev A Stanley Security© 2015

STANLEY®
Security