Door Closer Models: HD8016 and HD8056 FHP Parallel Arm Installation [Push Side Mount] Drilling Instructions

BEST dormakaba Group

For online instructions, assistance or warranty information:
Call 1-800-392-5209 or visit https://dhwsupport.dormakaba.com/hc/en-us

ANGLE OF MAX OPENING	DIM."A" CLOSER	DIM."B" SOFFIT
100°	10-5/8" [270]	10-1/4" [260]
180°	7-1/4" [184]	6-7/8" [175]

NOTES:
1. DRAWING IS NOT TO SCALE.
2. RIGHT HAND DOOR SHOWN.
3. DIMENSIONS ARE IN INCHES / [MM].
4. CAUTION: SEX NUTS ARE REQUIRED FOR ATTACHMENT OF COMPONENTS TO UNREINFORCED DOORS AND TO WOOD OR PLASTIC FACED COMPOSITE TYPE FIRE DOORS, UNLESS AN ALTERNATIVE METHOD IS IDENTIFIED IN THE INDIVIDUAL DOOR MANUFACTURER'S LISTINGS.
5. MAXIMUM OPENING 180°.
6. SEE CATALOG FOR HOLD OPEN RANGE.
7. DPK FASTENERS FOR STEEL DOOR & FRAME ONLY.

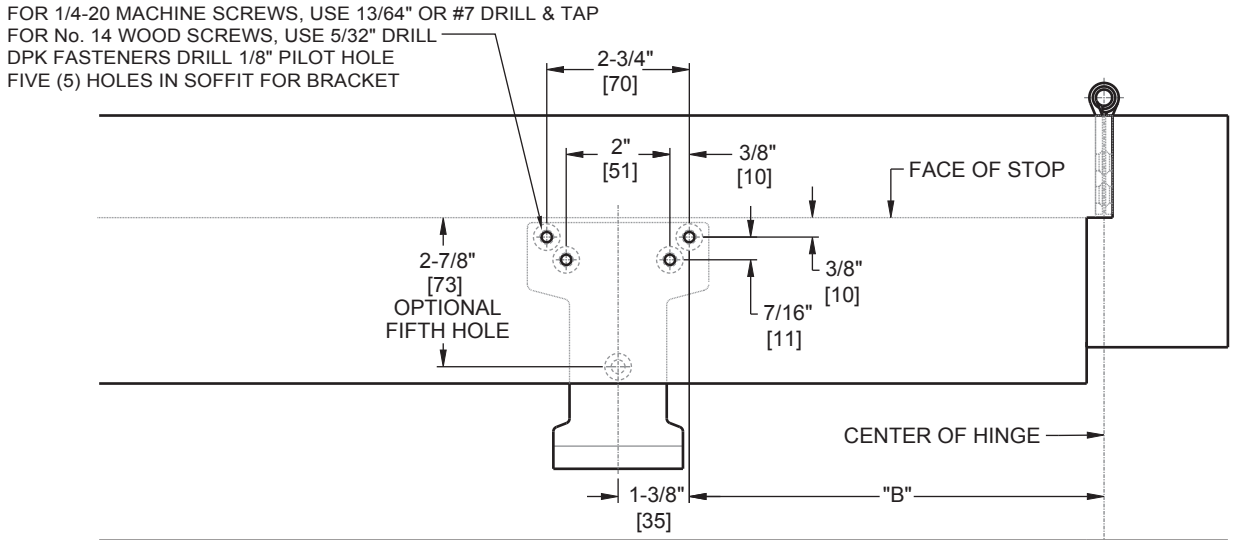

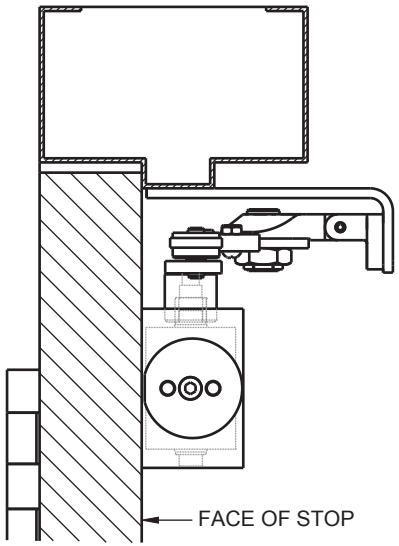

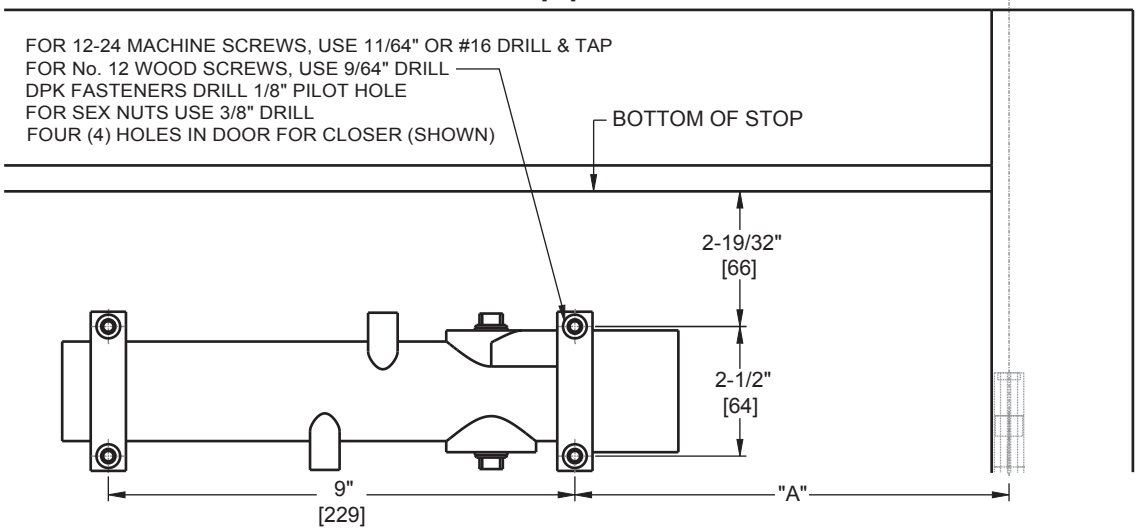

Not to scale. Measurements are for reference only.
Not a drilling template.

BEST is a trademark of dormakaba USA Inc. © 2022 All rights reserved.

T94909_A